

SKY AGRICULTURE

XT


SKY
AGRICULTURE
XT130



Fontenay-sur-Eure



Carvin



Châteaubourg



La Conillais



Osasco

WE ARE FARMERS

Knowledge
PRIDE
functional biodiversity
Agronomic and technological



SKY AGRICULTURE









WE ARE
PRECISION energetic efficiency
INDUSTRIAL
TECHNOLOGY

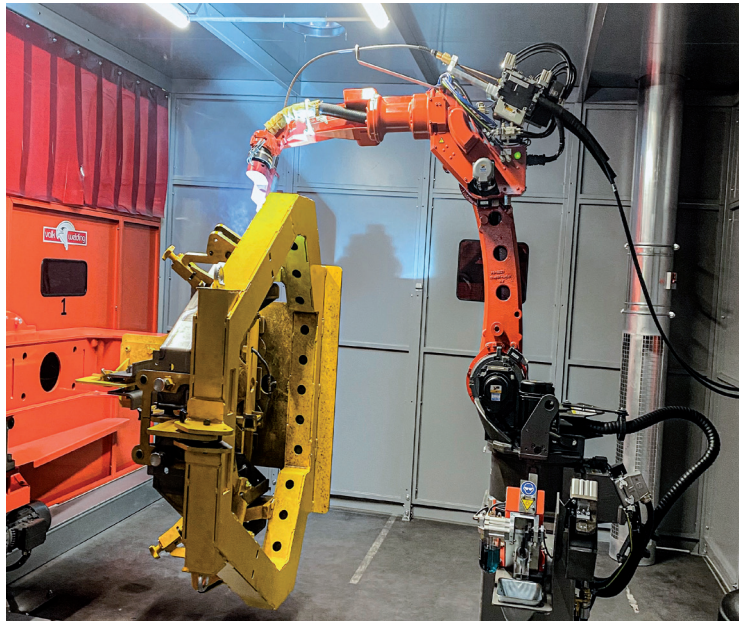





YouTube



FARMING TOGETHER

Be positive about Agriculture

Positivez sur l'Agriculture

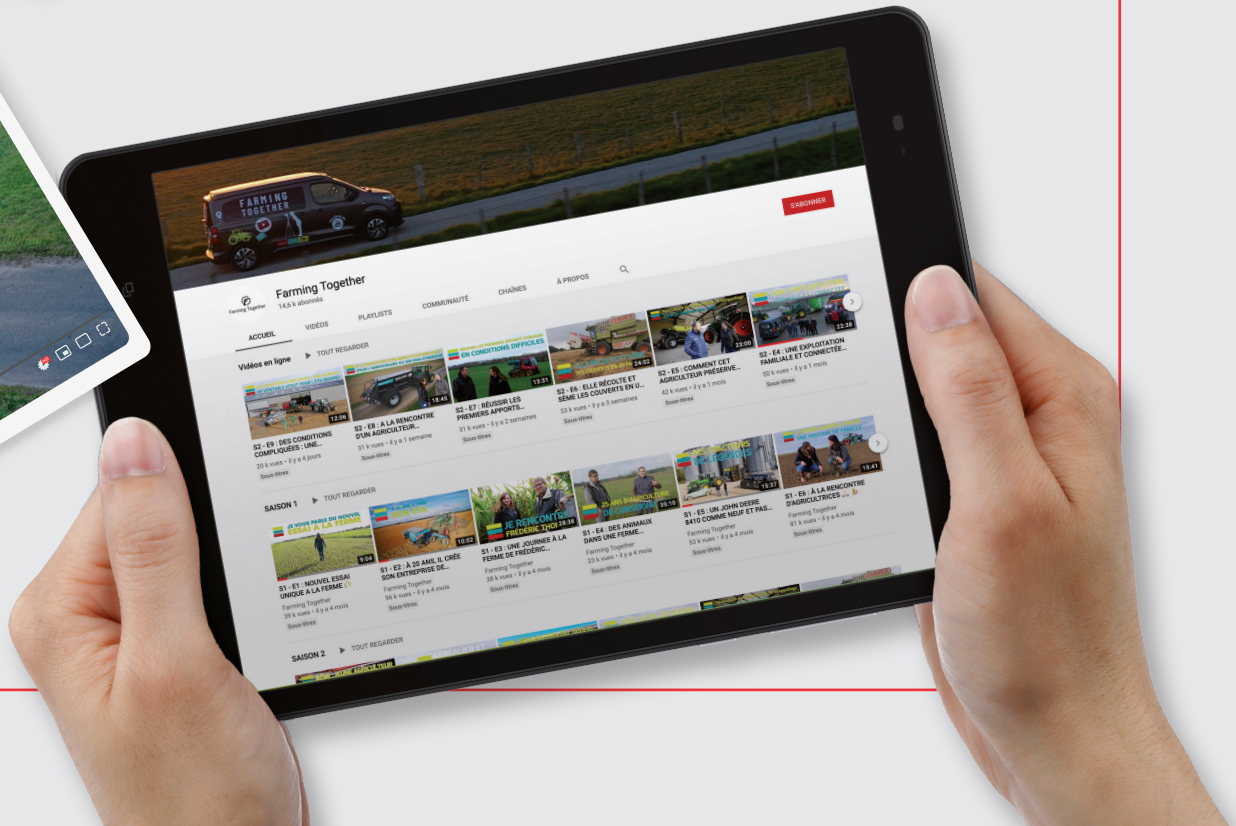



FARMING TOGETHER









Softshell



Veste matelassée









farming-together.com

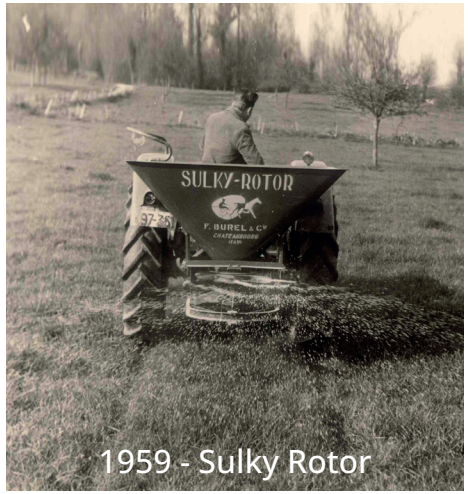

1959 - Sulky Rotor






SKY
AGRICULTURE
XT160


SKY
XT160


SKY
XT160
25


25

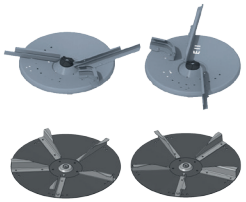







XT PRO



XT 100
7500L / 10.0t



XT 130
9500L / 12.5t



XT 160
13000L / 15.9t

XT ECONOV

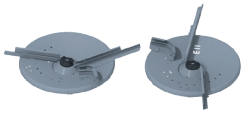





XT 100
7500L / 10.0t



XT 130
9500L / 12.5t



XT 160
13000L / 15.9t

XT Ca-P

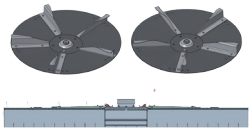

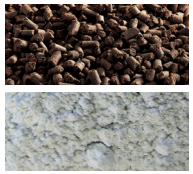



XT 100
7200L / 10.0t



XT 130
9500L / 12.5t



XT 160
13000L / 15.9t



XT 240
23.9t

XT Hydro

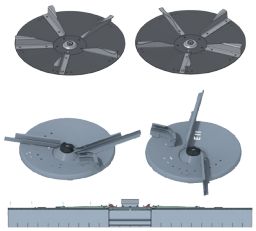





XT 160H
13000L / 15.9t



XT 240H
23.9t





S25



S 25
1500L / 2000L


ANITOU
XT130
SKY
AGRICULTURE
40
MANITOU



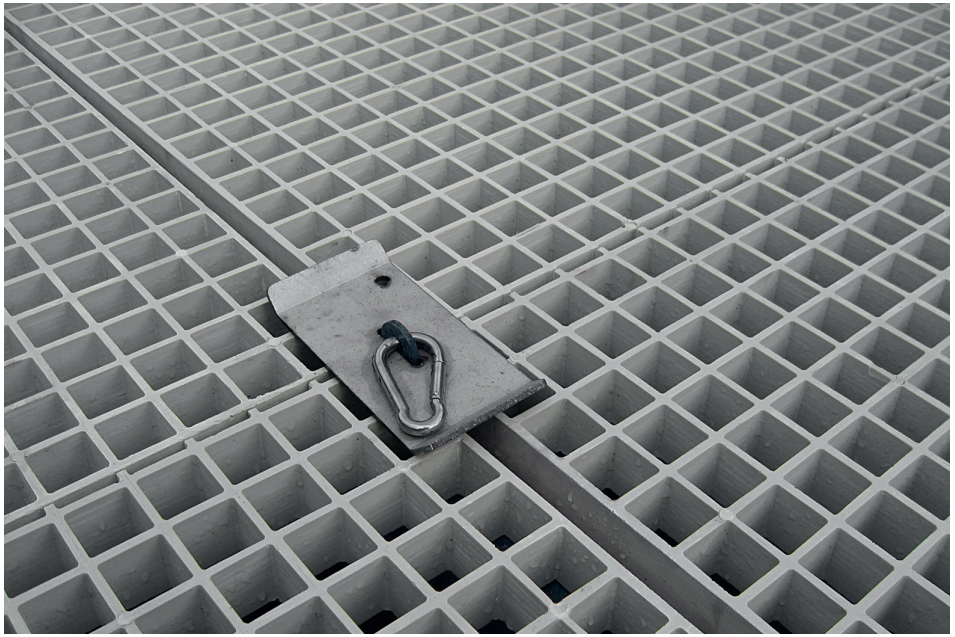

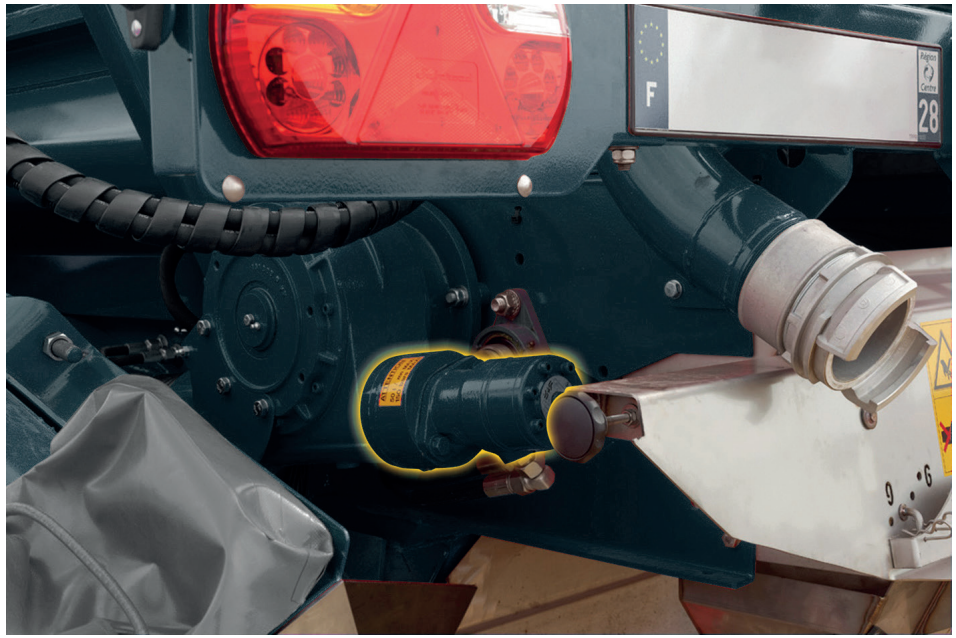
F
28


0km/h

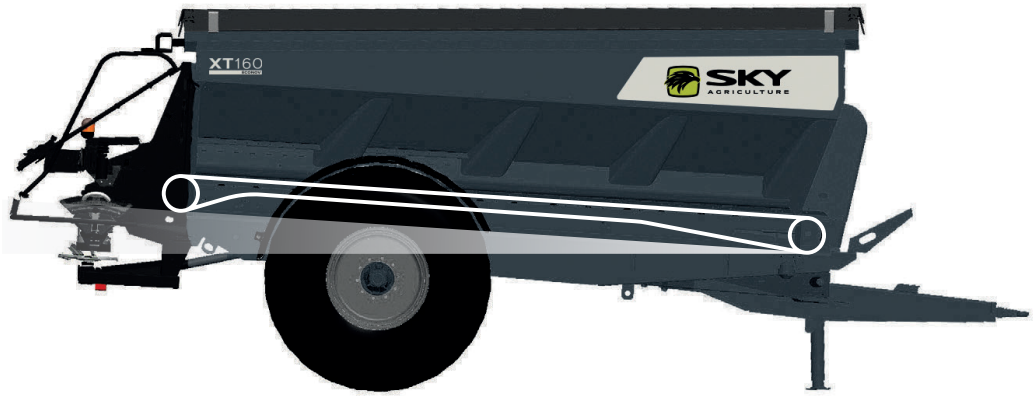
XT160
SKY
AGRICULTURE


3°

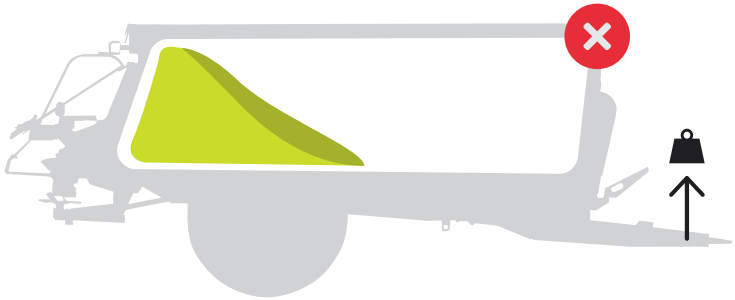

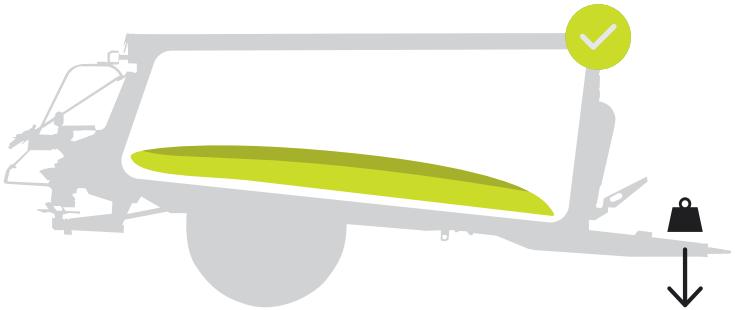



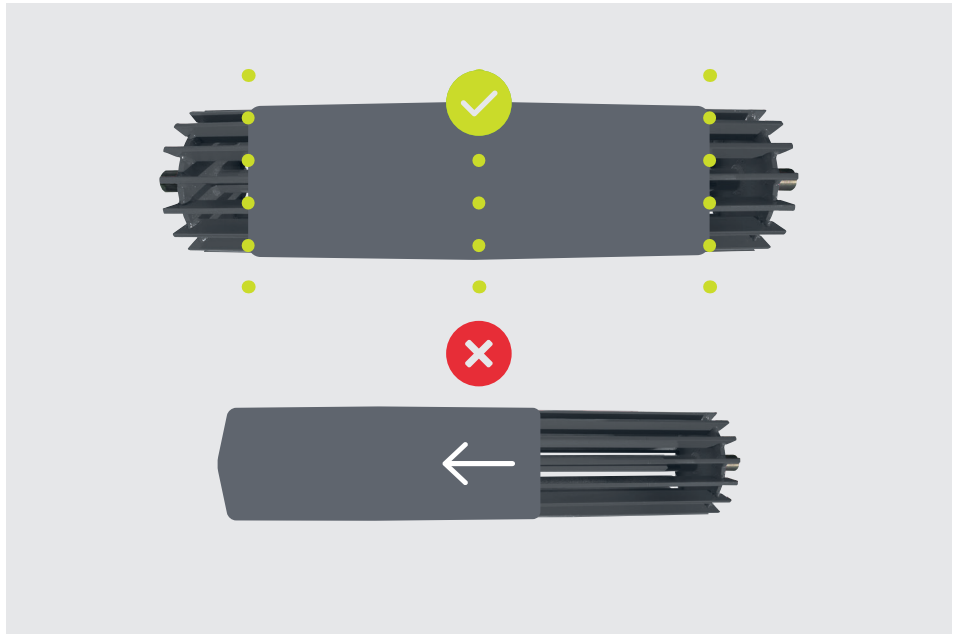















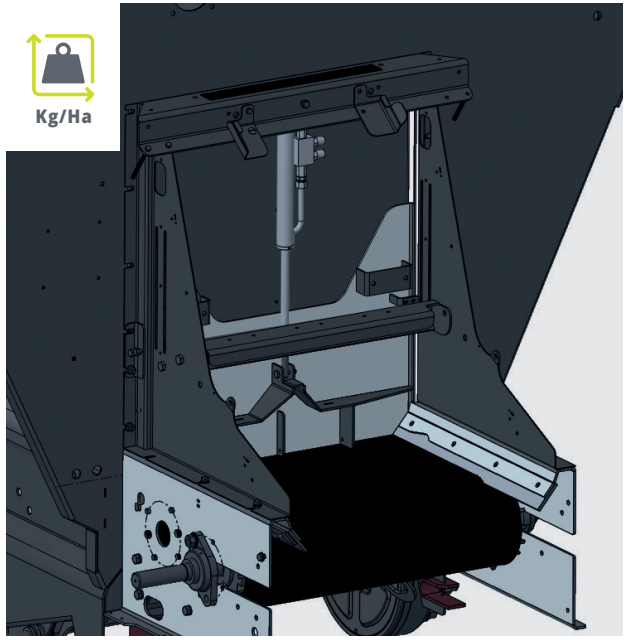
Kg/Ha

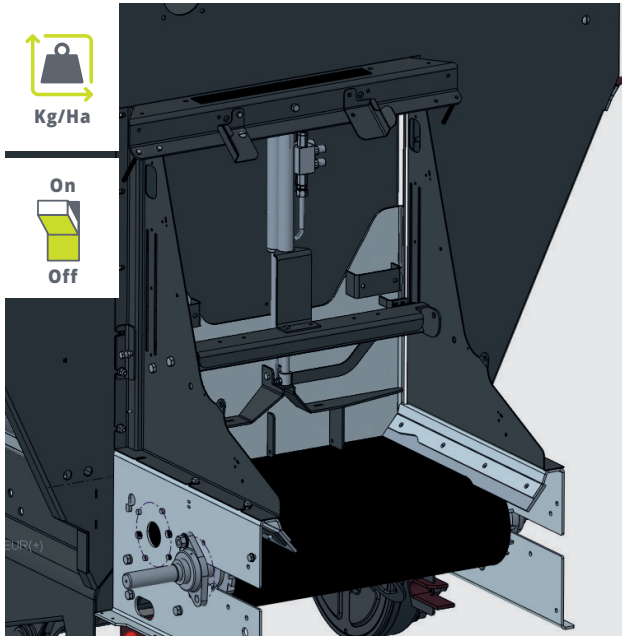
Kg/Ha
On
Off

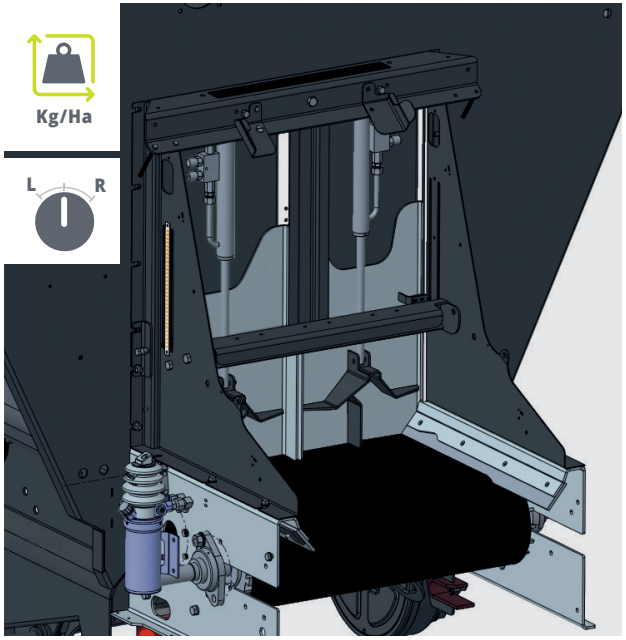
Kg/Ha
L
R

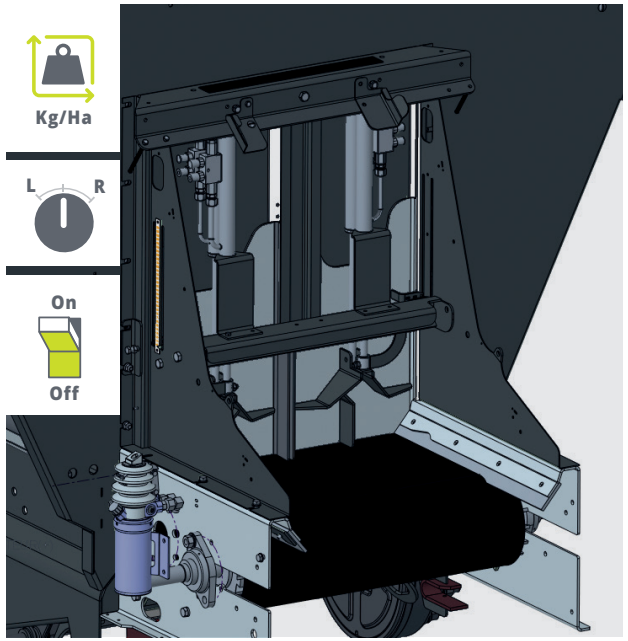
Kg/Ha
L
R
On
Off

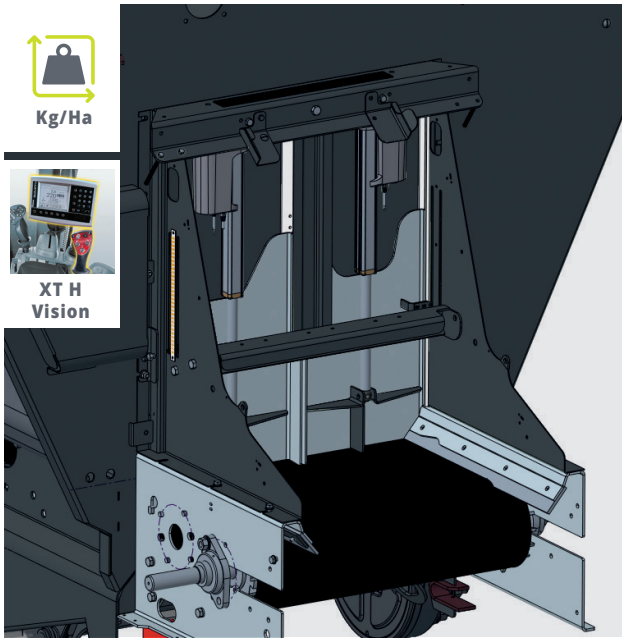
Kg/Ha
XT H
Vision

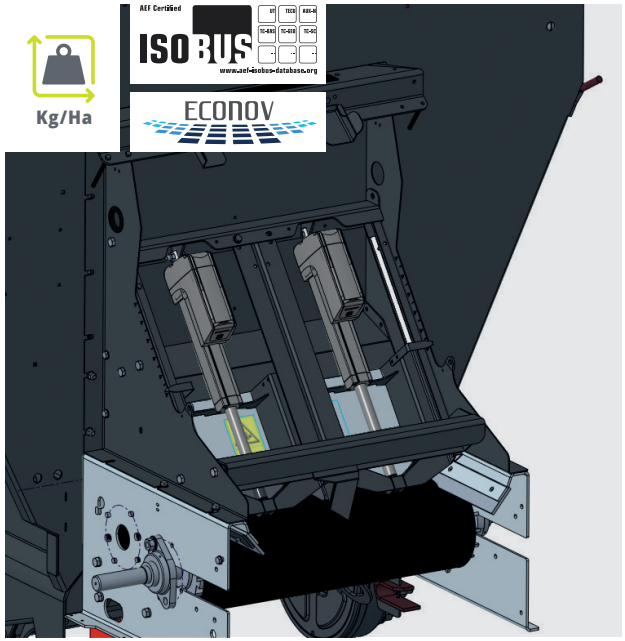
Kg/Ha
ISOBUS
ECONOV

EPSILON SYSTEM®



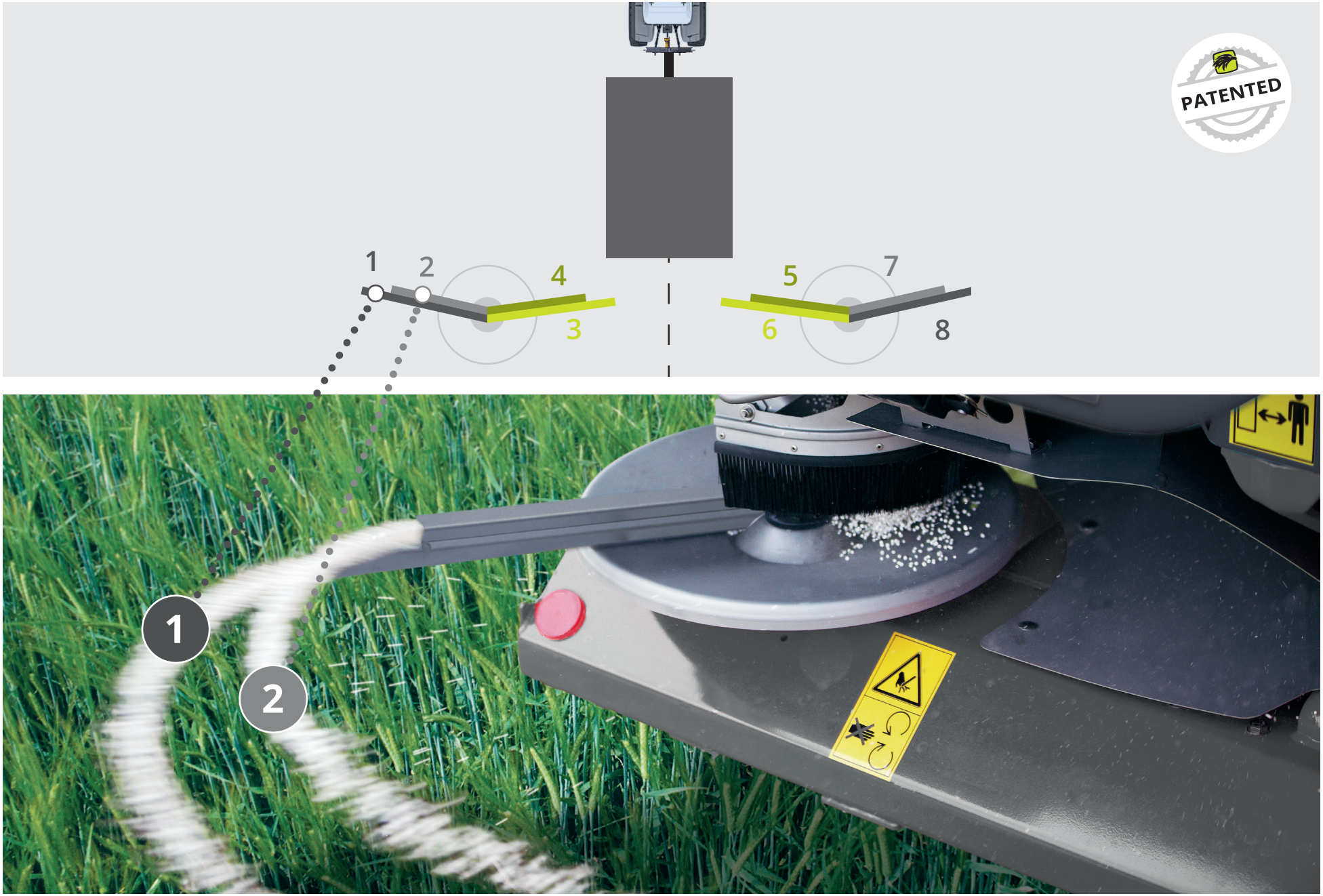
1
2
4
3
5
7
6
8
PATENTED
1
2

PDF 540tr/min

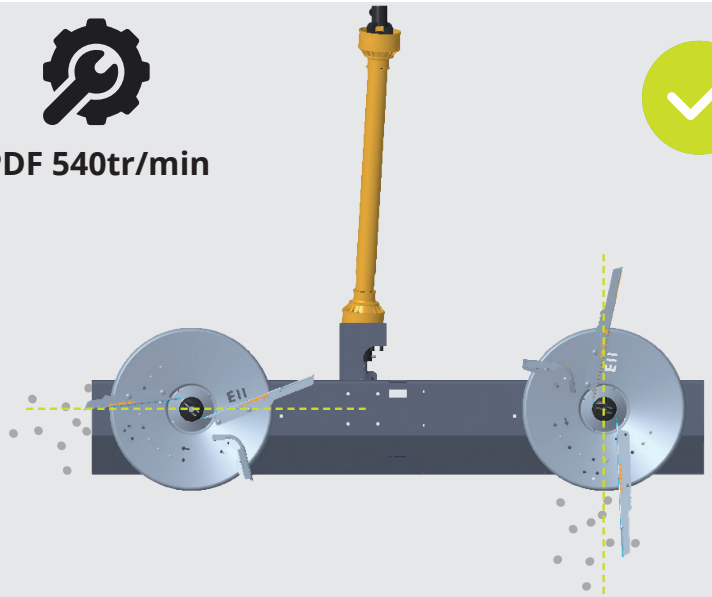

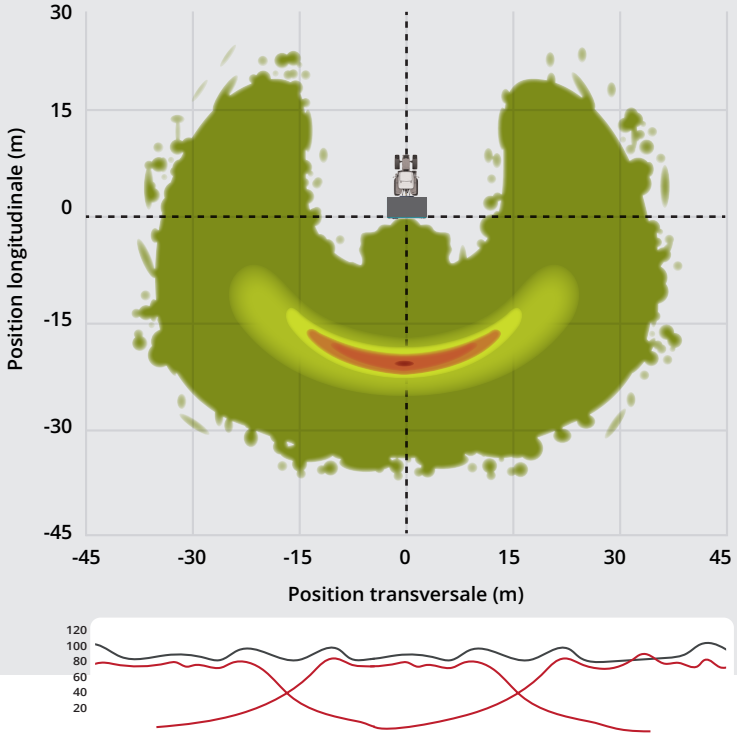

Hydraulique : l/min

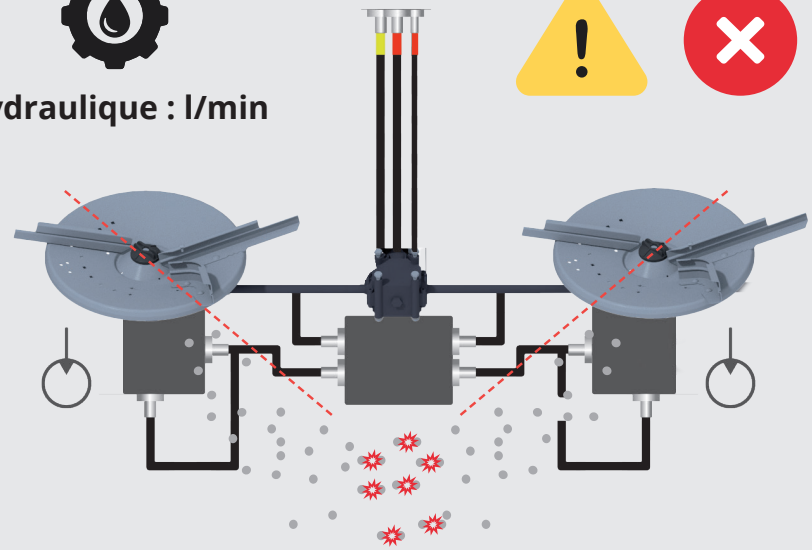

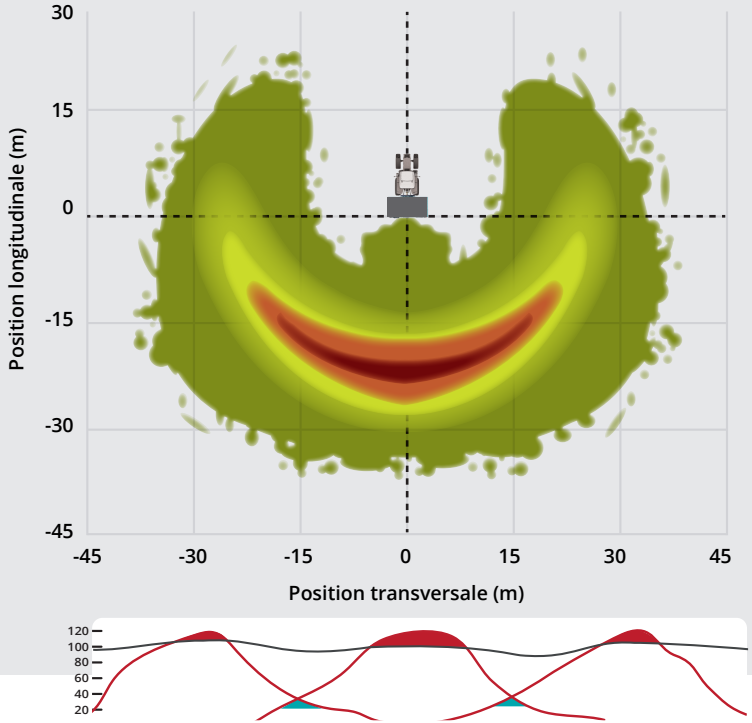

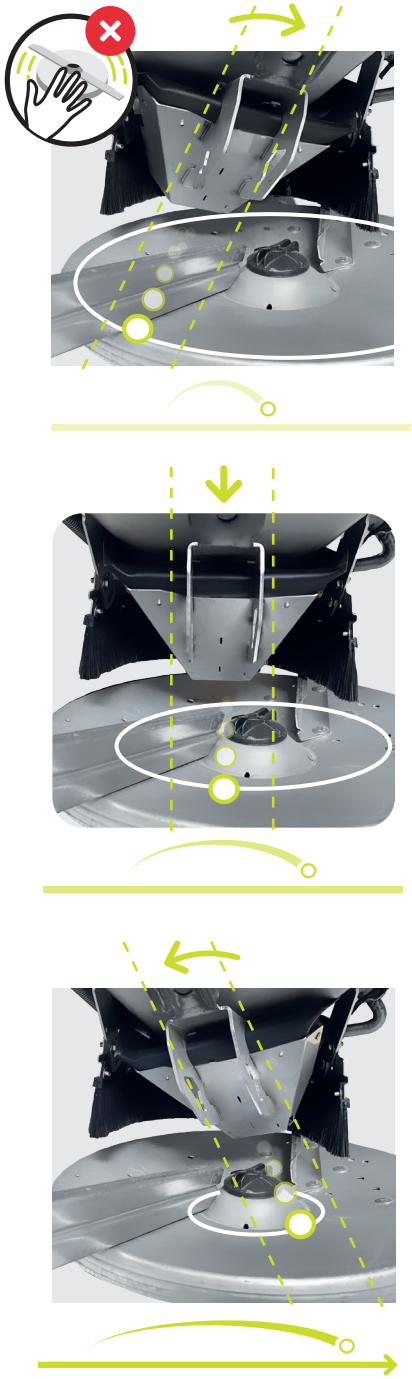

TRIBORD

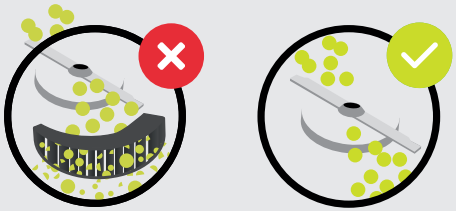

XT 3D

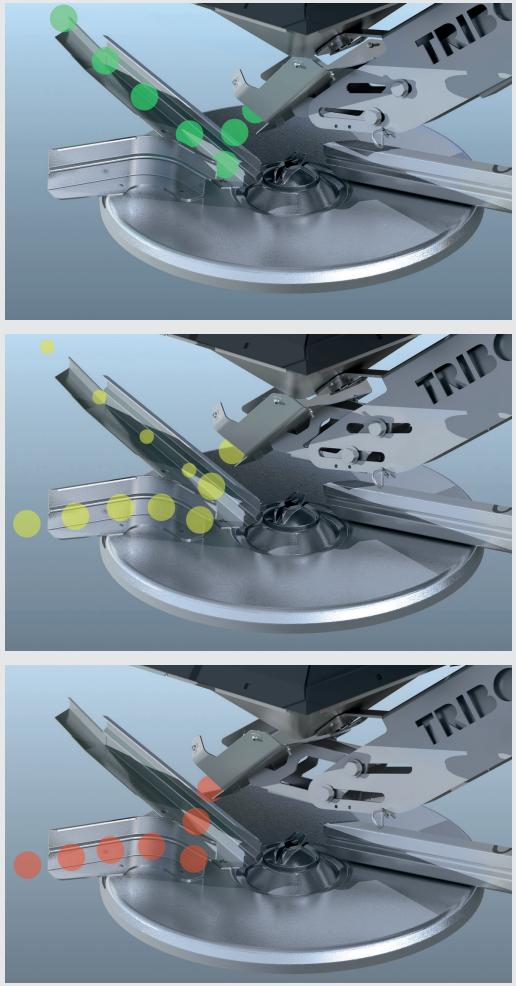

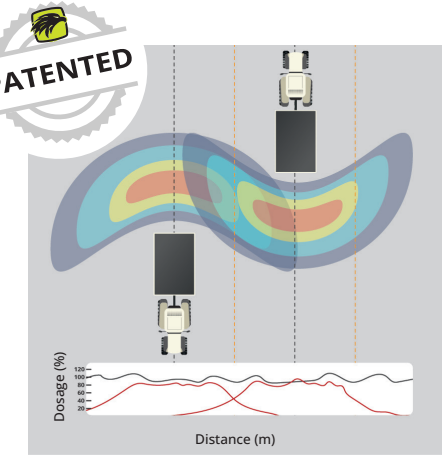

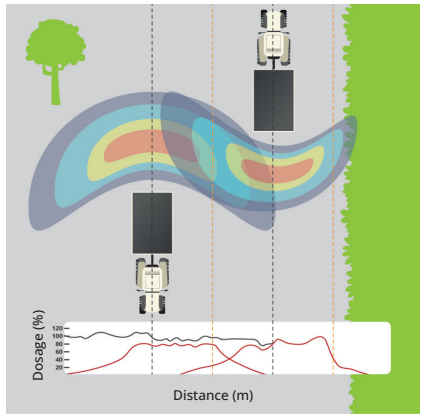

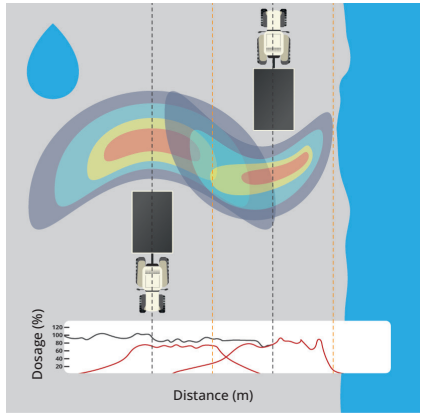


XT130
SKY
AGRICULTURE

FERTITEST


12:09
Mes réglages
QUE SOUHAITEZ-VOUS ÉPANDRE ?
ENGRAIS MINÉRAL
AUTRES PRODUITS
12:09
10/07/2023
XT 130
UREE 46 (SLUISKIL YARA)
Option régulation électronique
Largeur de travail
32 m
Jeu de pales
32-44
Réglage largeur
Valeur calculée
108
Réglage largeur
Valeur modifiée
Ajouter
Densité
Valeur calculée
0.74
Densité
Valeur modifiée
Ajouter



XT

AEF Certified
ISOBUS
UT | TECU | AUX-N
TC-BAS | TC-GEO | TC-SC
www.aef-isobus-database.org



ECONOV

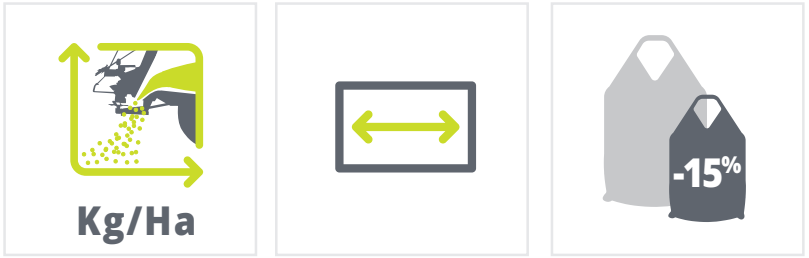

NO ECONOV

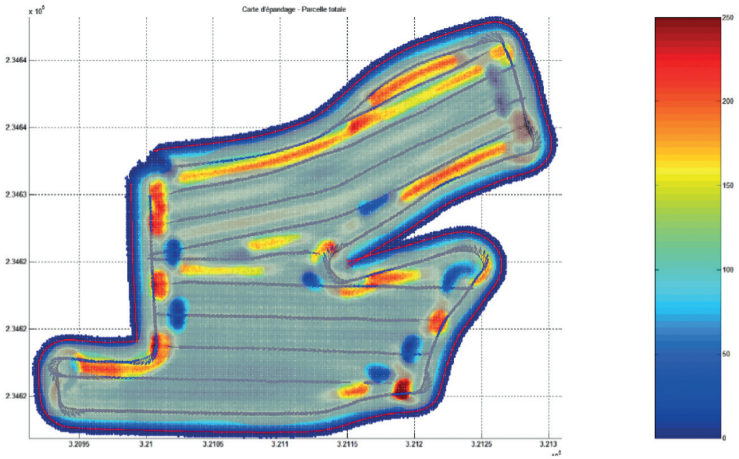

ECONOV 12

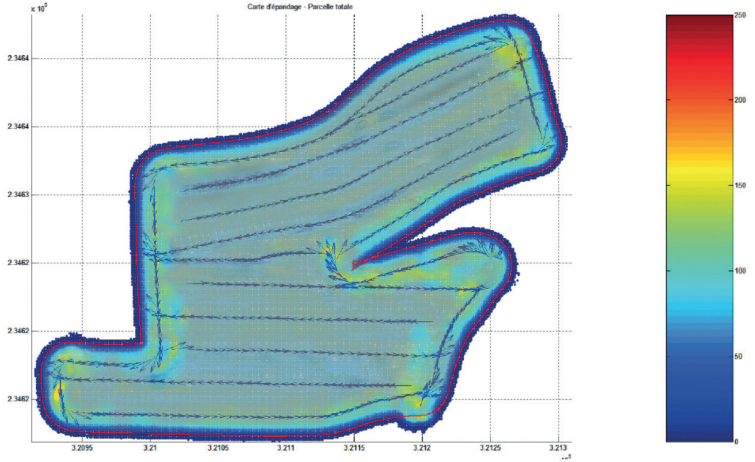

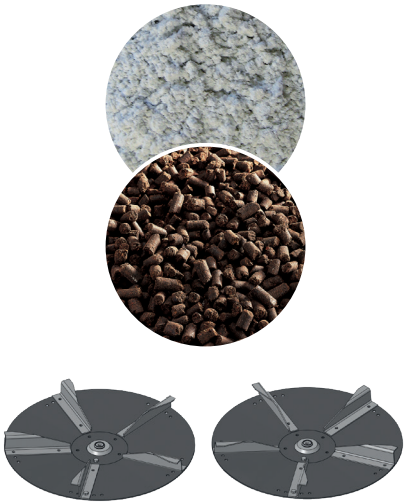





	3t/ha max	Pro
	5t/ha max	Pro
	5t/ha max	Ca-P


SKY
AGRICULTURE
XT240

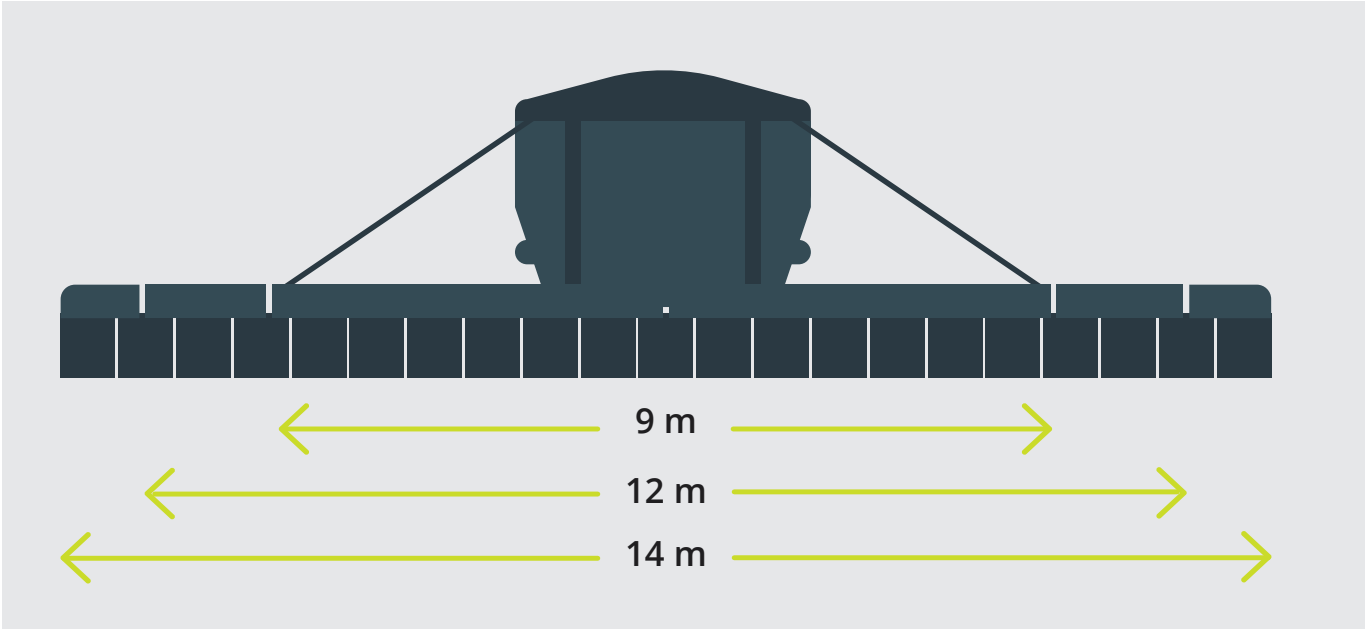
9 m
12 m
14 m

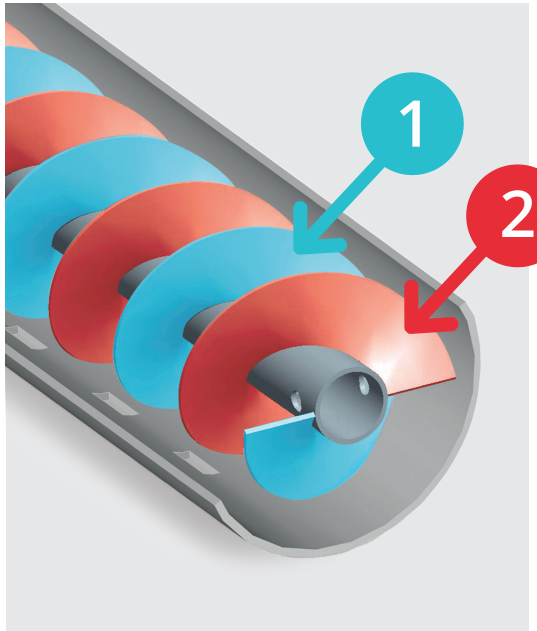
1
2


SKY
XT240H

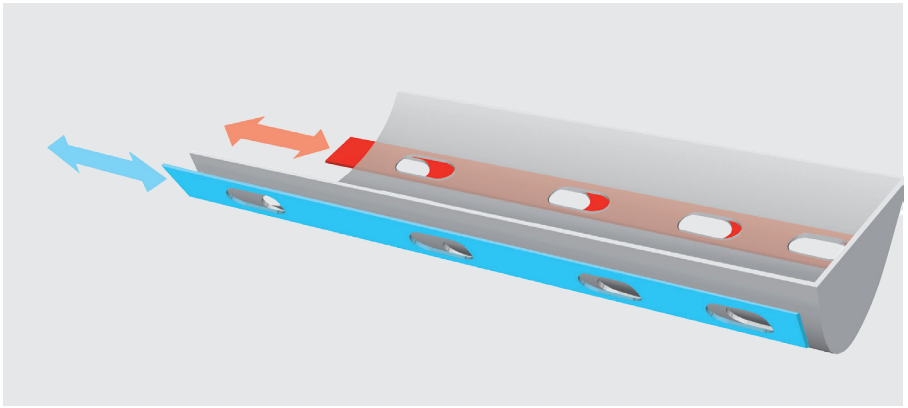



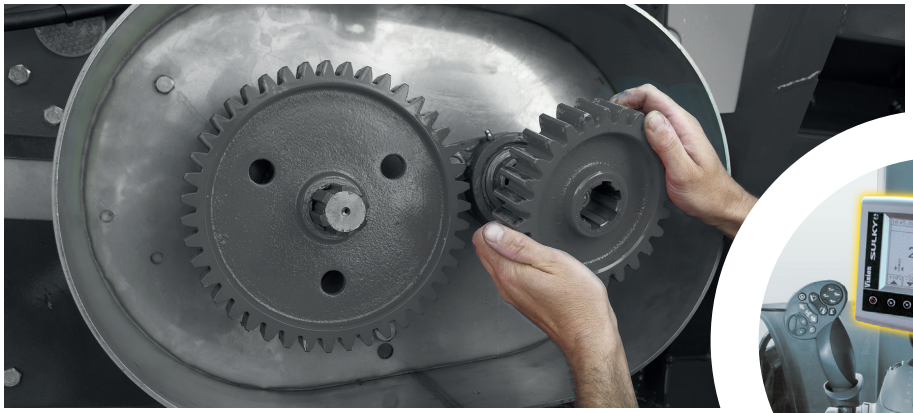



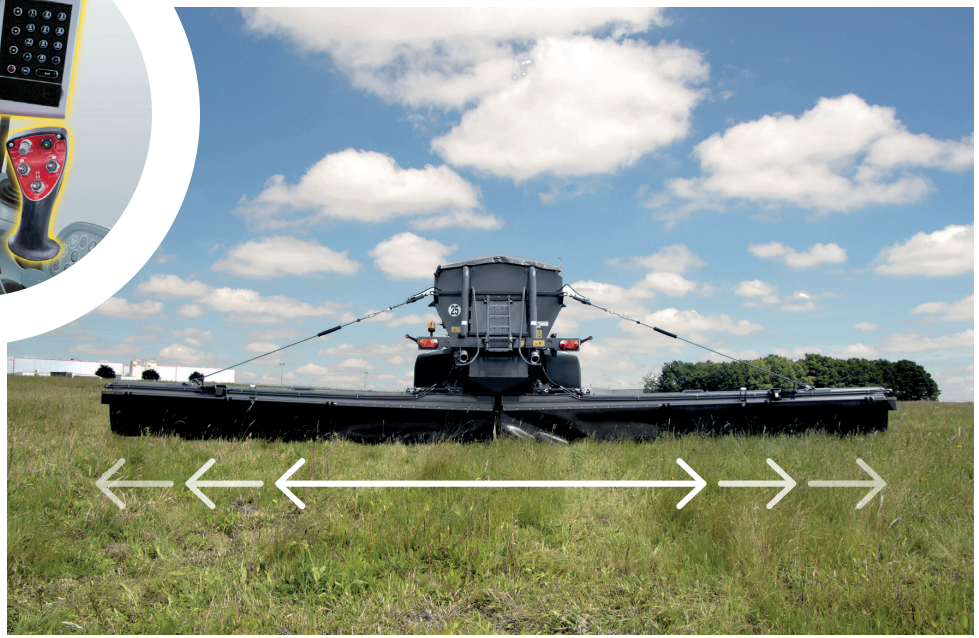



Type	XT 100														
(kg)	12.4 R46 151A8	340/85 R38 151D	18.4x30 152A8	460/85 R34 157A8	460/85 R38 167A8	520/85 R38 155D	23.1x26 18PR	620/75 R26 167A8	650/55 R26.5 180A8	710/50 R26.5 181A8	460/85 R38 167A8	340/85 R84 151D	380/90 R46 168D	460/85 R34 157A8	460/85 R38 167A8
	✓	✓	✓	✓	✓	✓	✓	✓	✓	✓	✓	✗	✗	✓	✓
	✗	✗	✗	✗	✗	✗	✗	✗	✗	✗	✗	✓	✓	✗	✓
MIN MAX (kg)	10000											10000 /12000	10000 /13000	12000	10000 /13000
(mm)	-70/+55	-95/+80	0	-50			-25	-50		-100	-50	-120/+105	-70/+55	0	
(mm)	2040/ 1790	2090/ 1740	1900	2000			1950	2000		2100	2250	2240 /1790	2140 /1890	2000	
(+/- 20mm)	2360/ 2110	2440/ 2090	2390	2490		2570	2550	2630	2660	2830	2740	2590 /2140	2520 /2270	2490	
	✗	✓	✓	✗	✗	✗	✗	✗	✓	✓	✗	✗	✗	✓	✗

Type	XT 160 / XT 160H											XT 240 / XT 240H				
(kg)	520/85 R38 169D	520/85 R38 169D	20.8 R 42 169A8	580/70 R38 180D	620/75 R26 167A8	650/75 R32 172A8	600/60 R30.5 173D	650/65 R30.5 176D	710/50 R30.5 176D	750/60 R30.5 181D	800/65 R32 178A8	600/60 R30,5 173D	650/55 R26,5 180A8	650/65 R26,5 165D	710/50 R26,5 176D	710/50 R30,5 176D
	✓	✓	✓	✓	✓	✓	✓	✓	✓	✓	✓	✓	✓	✓	✓	✓
	✗	✗	✗	✗	✗	✗	✗	✗	✗	✗	✗	✓	✓	✓	✓	✓
MIN MAX (kg)	15900											21000/23900				
(mm)	+50/+35	-100	-50/+35	0		-50	0		-50		-80	0			-25	-50
(mm)	1980 /2150	2250	1980 /2150	2050		2150	2050		2150		2210	2150			2200	2250
(+/- 20mm)	2550 /2720	2820	2550 /2720	2630	2680	2800	2690	2740	2880	2930	3000	2780	2800	2820	2900	2980
	✗	✗	✗	✗	✓	✗	✓	✓	✓	✓	✗	✓	✓	✓	✓	✓

XT 130

520/85 R38 169A8	520/85 R42 169A8	520/85 R46 158D	580/70 R38 155D	23.1 x 26 18PR	620/75 R26 167A8	650/75 R32 172A8	650/55 R26.5 180A8	650/65 R30.5 176D	710/50 R26.5 181A8	710/50 R30.5 173D	750/60 R30.5 181D	340/85 R48 151D	460/85 R38 167A8	460/85 R38 167A8	460/85 R38 167A8	460/85 R38 167A8	710/50 R26.5 181A8
✗	✗	✗	✗	✓	✓	✓	✓	✓	✓	✓	✓	✗	✓	✗	✓	✗	✓
✓	✓	✓	✓	✗	✓	✓	✓	✓	✓	✓	✓	✓	✗	✓	✗	✓	✗
10000 /13000	10000 /12000		10000 /13000	12000	10000 /13000							10000 /12000	12000	10000 /13000	12000	10000 /13000	12500
0		-50		+20	0	-50		0	-50		-100	-120 /+105	-50		-120		-75
2000		2100		1960	2000	2100		2000	2100		2200	2400 /1950	2250		2400		2300
2530		2630	2680	2550	2630	2740	2760	2660	2830		2990	2750 /2300	2740		2880		
✗	✗	✗	✗	✓	✓	✗	✓	✗	✓	✓	✗	✗	✗	✗	✗	✗	✗



XT / XT H

Type	XT 100	XT 130	XT 160	XT 160H	XT 240H
(kg)	10 000	12 500	15 900	15 900	23 900
(L)	7200	9500	13000	13000	15500
(m)	6.63			8.39	
(m)	2.55 - 2.85			2.55 - 3.00	
(m)	2.32 - 2.69	2.50 - 3.00	2.78 - 2.94	2.78 - 2.94	3.06 - 3.16
(m)	4.00 x 2.06			5.35 x 2.06	
(CV)	80 - 100	90 - 110	120 - 140	130 - 150	180 - 220
(mm)	90	100/130	140	140	2 x 140 Tandem (rear fol.)
(Ø)	18.4 x 30	23.1 x 26	600/60 x 30.5	600/60 x 30.5	600/55 x R 26.5
(kg)	2500	2800	3900	4900	6900




SKY
XT160
25

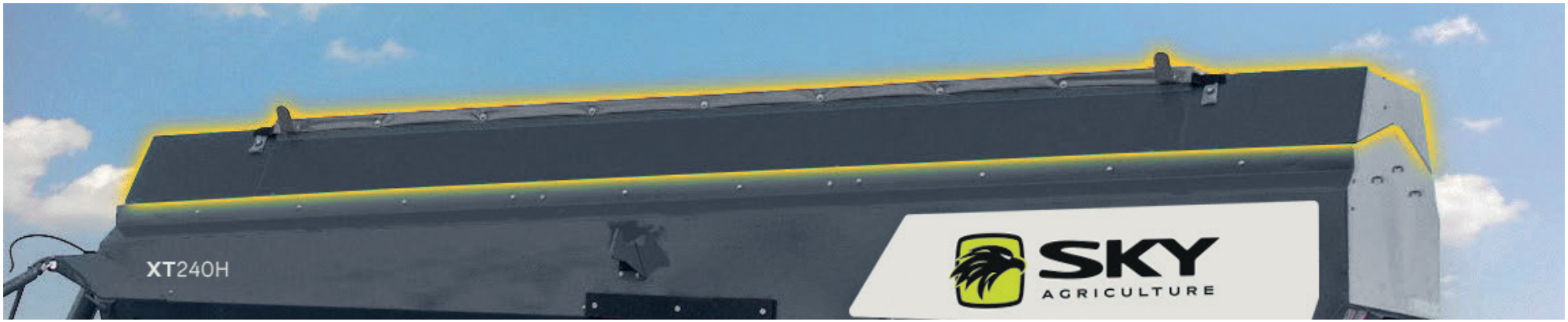
XT240H
SKY
AGRICULTURE





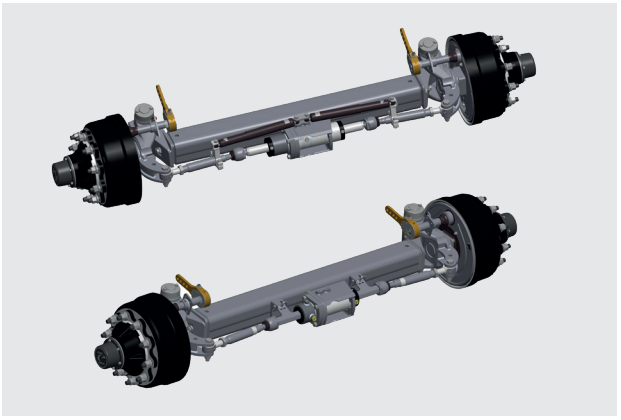



SKY AGRICULTURE

Châteaubourg
P.A. de la Gaultière
35220 Châteaubourg

Fontenay
21 Rue Jean Monnet
28630 Fontenay-sur-Eure

Carvin
Rue du Pont de Grès
62220 Carvin

Osasco
Via Garzigliana, 37
10060 Osasco TO, Italie

Ferme de la Conillais
Saint-Émilien-de-Blain
44130 Blain

Tél : +33 (0)2 99 00 84 84

contact@sky-agriculture.com

sky-agriculture.com

Creation : zoan.fr - In the aim to constantly improve its products, SKY reserves the right to modify the characteristics at anytime and without prior warning. 06/2023 - 406 508

Réf : 406 508