DATASHEET

QUICK CHANGERS

v1.3

1. Datasheet

1.1. Quick Changers

Quick Changer

Name	Quick Changer I/O support – Robot Side	Quick Changer - Robot Side	Quick Changer - Robot Side 4.5A	Quick Changer - Robot Side
Item #	102326	102037	104277	109498
Version	QC-R – I/O	QC-R v2	QC-R v2-4.5	QC-R v3
Illustration				

Dual Quick Changer

Name	Dual Quick Changer	Dual Quick Changer 4.5A	Dual Quick Changer
Item #	101788	104293	109878
Version	Dual QC v2	Dual QC v2-4.5	Dual QC v3
Illustration			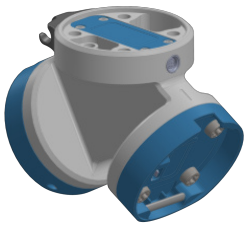

If not specified, the data represent the combination of the different Quick Changer types/ sides.

Technical data	Min	Typical	Max	Units
Permissible force *	-	-	600*	[N]
Permissible torque *	-	-	60*	[Nm]
Rated payload *	- -	- -	20* 44	[kg] [lbs]
Repeatability	-	-	±0.02	[mm]
IP Classification	67			
Operating life (Tool change)	-	5.000	-	[cycles]
Operating life (Robot operation)	-	10	-	[M cycles]

* See static load capacity graph below.

	Quick Changer	Quick Changer for I/O	Dual Quick Changer	Quick Changer - Tool Side	Units
Weight	0.06 0.13	0.093 0.21	0.41 0.9	0.14 0.31	[kg] [lb]
Dimensions	See Mechanical dimension section				

QC-R V3 | DQC V3 and the QC-R V2 | QC-R V2-4.5A | DQC V2 | DQC V2-4.5A

The following graph shows the load capacity that the QC-R V3 | DQC V3 and the QC-R V2 | QC-R V2-4.5A | DQC V2 | DQC V2-4.5A can handle in a static situation. The values for a situation with an acceleration of 2g are half of the static values.

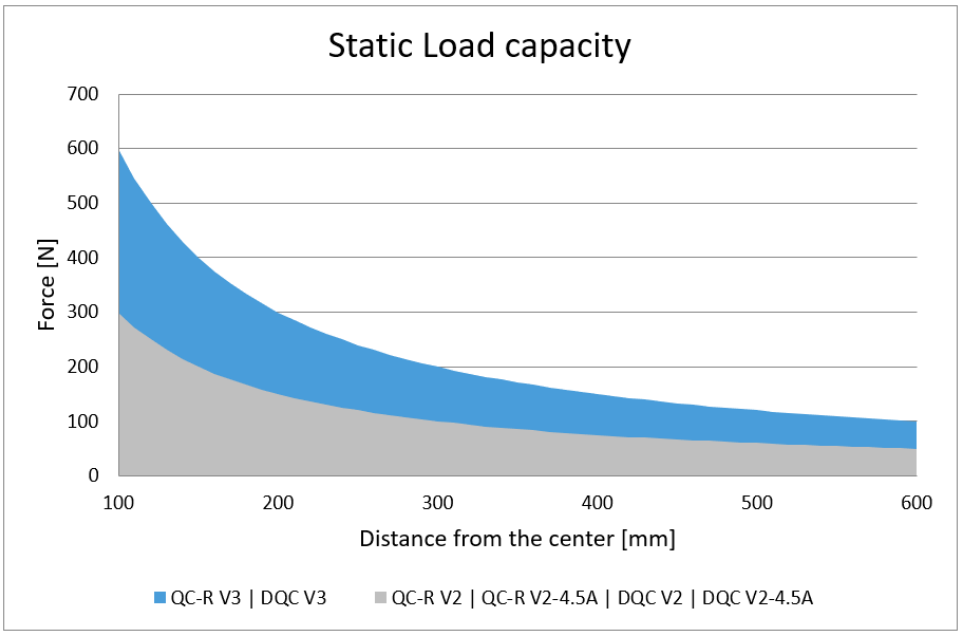

1.2. Quick Changer - Robot Side

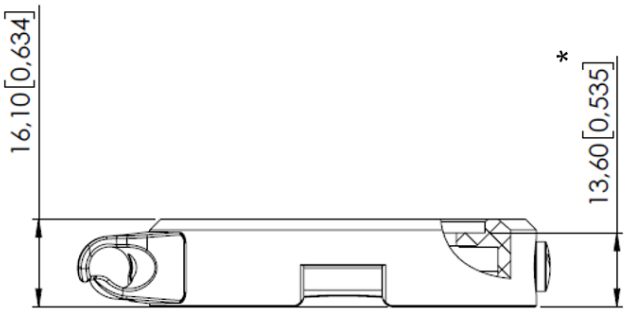

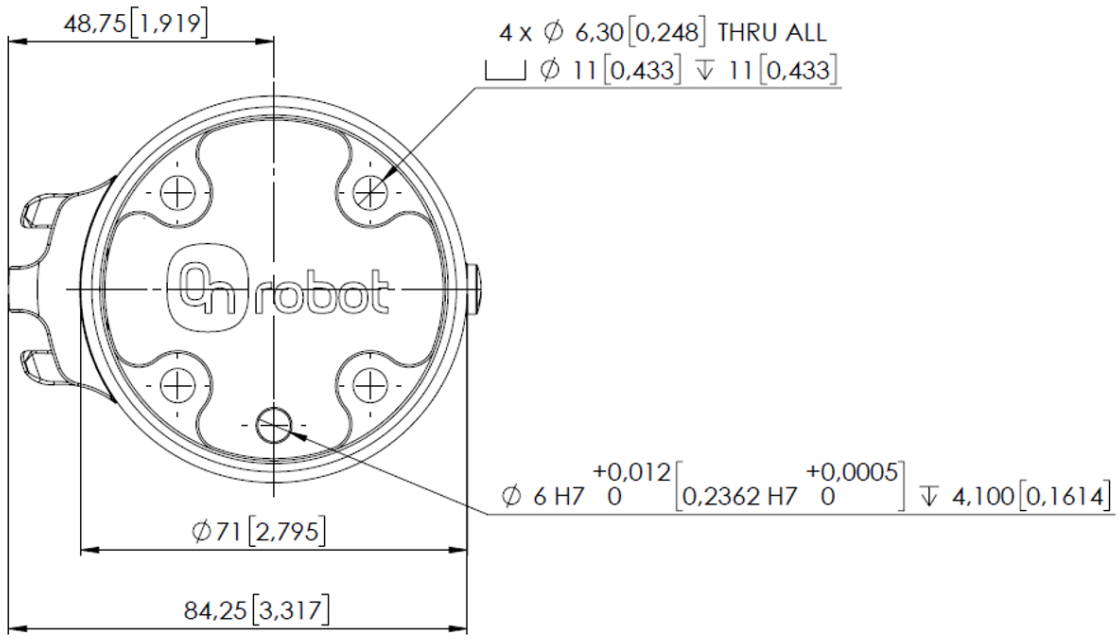

* Distance from Robot flange interface to OnRobot tool.

All dimensions are in mm and [inches].

NOTE:

The cable holder (on the left side) is only required with the long (5 meter) cable.

1.3. Dual Quick Changer

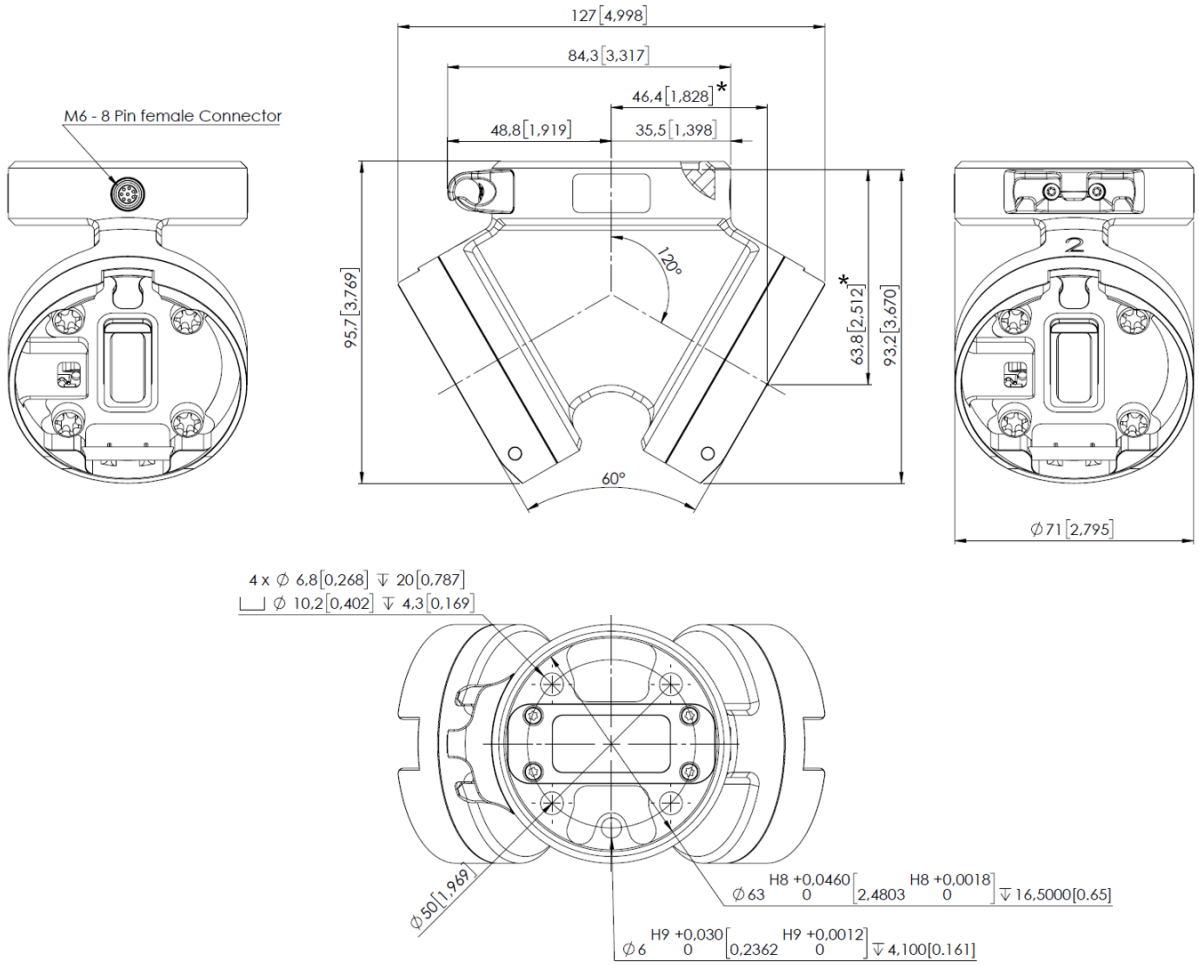

* Distance from Robot flange interface to OnRobot tool

All dimensions are in mm and [inches].

1.4. Quick Changer for I/O - Robot Side

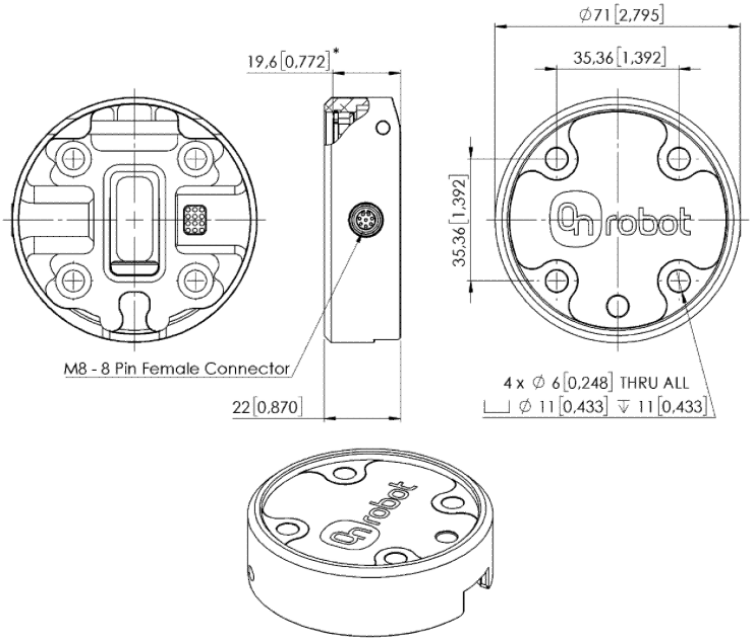

* Distance from Robot flange interface to OnRobot tool

All dimensions are in mm and [inches].

1.5. Quick Changer - Tool Side

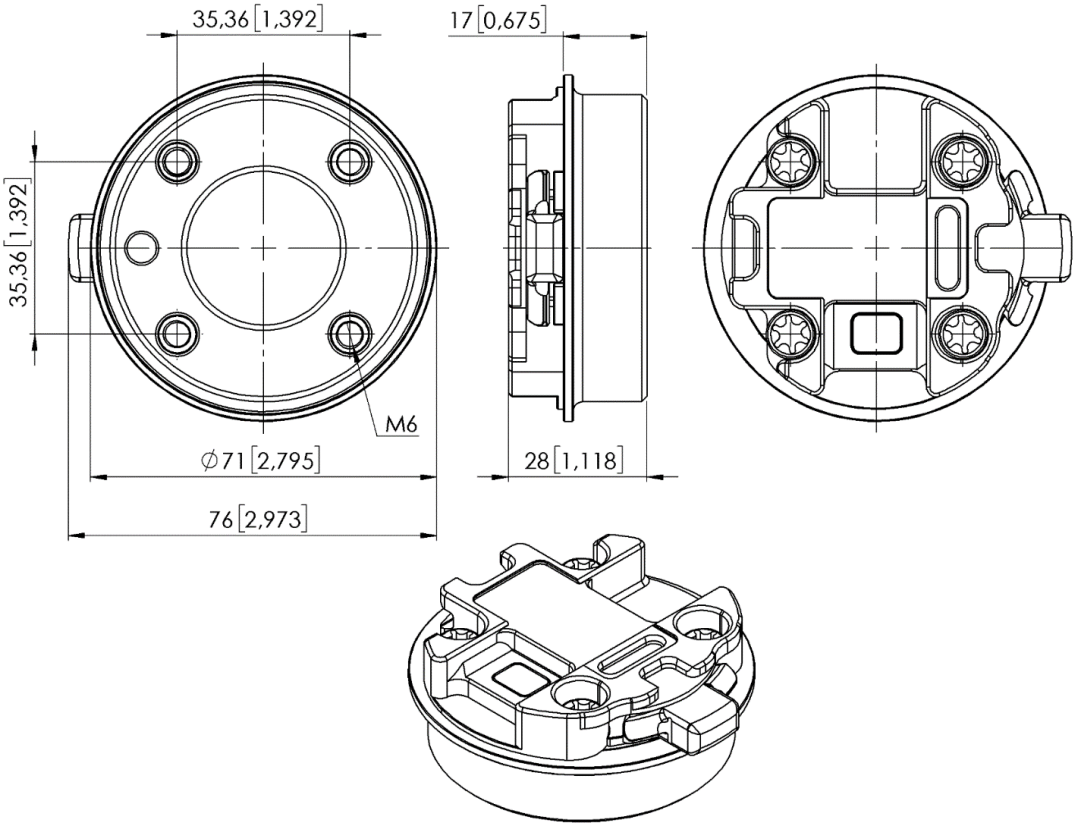

All dimensions are in mm and [inches].