DICSA

www.dicsaes.com

RACORES INOXIDABLE

Stainless Steel Fittings
Raccords en Acier Inox
Raccordi in Acciao Inossidabile

AISI 316L

20 22

DICSA
e-digital

¿ESTÁS PREPARADO
PARA DISFRUTAR DE NUESTRA NUEVA WEB?
+ RÁPIDA Y FUNCIONAL

ARE YOU READY?
NEW WEBSITE LAUNCHING COMING SOON!
BETTER & FASTER

WWW.DICSAES.COM

CONEXIONES PARA FLEXIBLES
Crimp fittings for hoses
Embouts à sertir pour flexibles
Raccordi a pressare per tubi flessibili

1

TUBO RÍGIDO TRALE® / RACORES DIN 2353 / RACORES JIC 37°
TRALE® Rigid Pipe/ Pipe fittings DIN 2353/ Flare fittings JIC 37°
Tube rigide TRALE®/ Raccords DIN 2353/ Adapteurs JIC 37°
Tubo rigido TRALE®/ Raccordi DIN 2353/ Raccordi JIC 37°

2

TUBO RÍGIDO TRALE® SCH / RACORES SCH / BRIDAS SAE / ABRAZADERAS
SCH TRALE® Rigid pipe/ SCH fittings / SAE Flanges / Clamps
Tube rigide TRALE® SCH / Embouts SCH / Brides SAE/ Colliers
Tubo rigido TRALE® SCH / Raccordi SCH / Flange SAE/ Collari fissatubo

3

ADAPTADORES
Adaptors
Adapteurs
Adattatori

4

RACORES SOLDABLES
Welding fittings
Raccords à souder
Raccordi a saldare

5

RACORES INDUSTRIALES
Industrial fittings
Raccords industriels
Raccordi industriali

6

ACCESORIOS
Accessories
Accessoires
Accessori

7

COMPONENTES HIDRÁULICOS AISI 316
Hydraulic Components AISI 316
Composants Hydrauliques AISI 316
Componenti Idraulici AISI 316

8

METROLOGÍA
Flow measuring
Test du circuit hydraulique
Test per circuiti idraulici

9

RACOR DOBLE ANILLO TRALE® LOK
Twin Ferrule Fittings TRALE® Lok
Raccord double bague TRALE® Lok
Raccordi per doppio anello TRALE® Lok

10

CONEXIONES STANDARD 23
Standard series
Embouts série standard
Serie Standard

CONEXIONES SERIE BW R12/4SP/4SH NO PELAR 42
Fittings BW Series R12/4SP/4SH No Skive
Embouts R12/4SP/4SH Série BW Sans dénuder
Raccordi R12/4SP/4SH Serie BW senza spellatura

CONEXIONES INTERLOCK 46
Interlock series
Embouts Interlock
Serie Interlock

CONEXIONES UNA SOLA PIEZA SERIE 43 R1AT/R2AT/1SN/2SN/R16/2SC/R17 51
One piece fittings 43 Series R1AT/R2AT/1SN/2SN/R16/2SC/R17
Embouts pré-sertis R1AT/R2AT/1SN/2SN/R16/2SC/R17 Série 43
Raccordi compatti R1AT/R2AT/1SN/2SN/R16/2SC/R17 Serie 43

CONEXIONES UNA SOLA PIEZA SERIE BWS 3SP/4SP/R12/4SH NO PELAR 57
One piece fittings BWS Series 3SP/4SP/R12/4SH No Skive
Embouts pré-sertis Série BWS 3SP/4SP/R12/4SH Sans dénuder
Raccordi Compatti Serie BWS 3SP/4SP/R12/4SH senza spellatura

CONEXIONES UNA SOLA PIEZA R7/R8/ ELASTÓMERO MALLA METÁLICA 63
One piece fittings R7/R8 & Elastomer Braid of steel wire
Embouts pré-sertis R7/R8 et Elastomère tresse métallique
Raccordi compatti serie R7/R8 e elastomero treccia metallica

CONEXIONES UNA SOLA PIEZA PTFE LISO / R14 68
One piece fittings for Smooth PTFE/ R14
Embouts pré-sertis pour PTFE lisse/ R14
Raccordi compatti per PTFE liscio/ R14

CONEXIONES UNA SOLA PIEZA PTFE CORRUGADO 73
One piece fittings for convoluted PTFE
Embouts pré-sertis pour PTFE convoluté
Raccordi compatti per PTFE corrugato

CONEXIONES UNA SOLA PIEZA SERIE BW R12/4SP/4SH NO PELAR 78
One piece fittings BW Series R12/4SP/4SH No Skive
Embouts pré-sertis R12/4SP/4SH Série BW Sans dénuder
Raccordi Compatti R12/4SP/4SH Serie BW senza spellatura

CONEXIONES UNA PIEZA SERIE BW+ R13/R15 NO PELAR
One piece fittings BW+ Series R13/R15 No Skive
Embouts R13/R15 Série BW+ Sans denuder
Raccordi R13/R15 Serie BW+ senza spellatura

CASQUILLOS PARA CONEXIONES UNA SOLA PIEZA 87
Ferrules for one piece fittings
Jupes pour embouts pré-sertis
Boccole per raccordi compatti

CONEXIONES REUSABLES 89
Reusable series
Embouts série récupérable
Serie Recuperabile

CONEXIONES PUSH-ON 92
Push-On Fittings
Embouts Push-On
Raccordi Serie Push-On

CONEXIONES ALTA PRESIÓN (700 BAR) 93
High pressure 700 bar fittings
Embouts haute pression 700 bar
Raccordi Altissima pressione (700 bar)

01

CONEXIONES PARA FLEXIBLES

Crimping fittings for hoses
Embouts à sertir pour flexibles
Raccordi a pressare per tubi flessibili

SERIE STANDARD

Standard series

TrAle® | TrAle® GOLD | GREENLINE

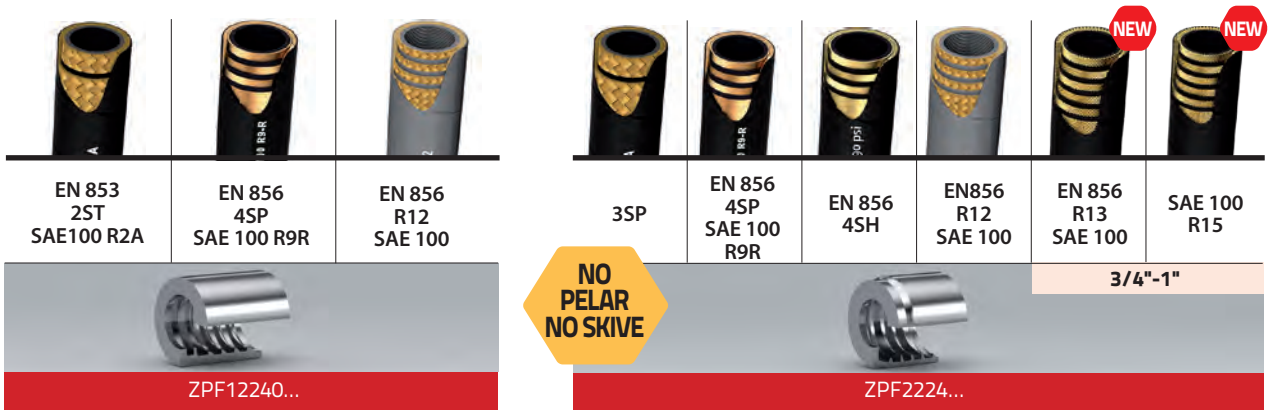

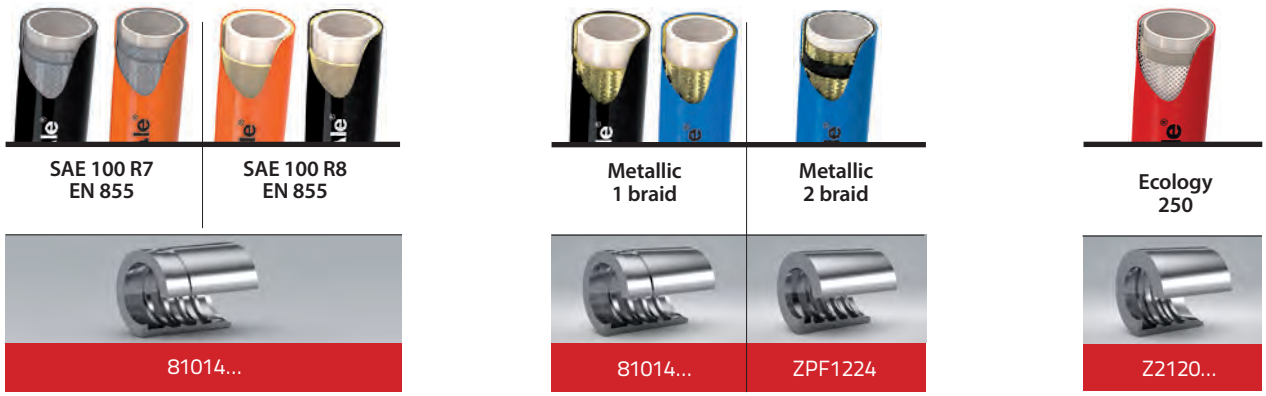

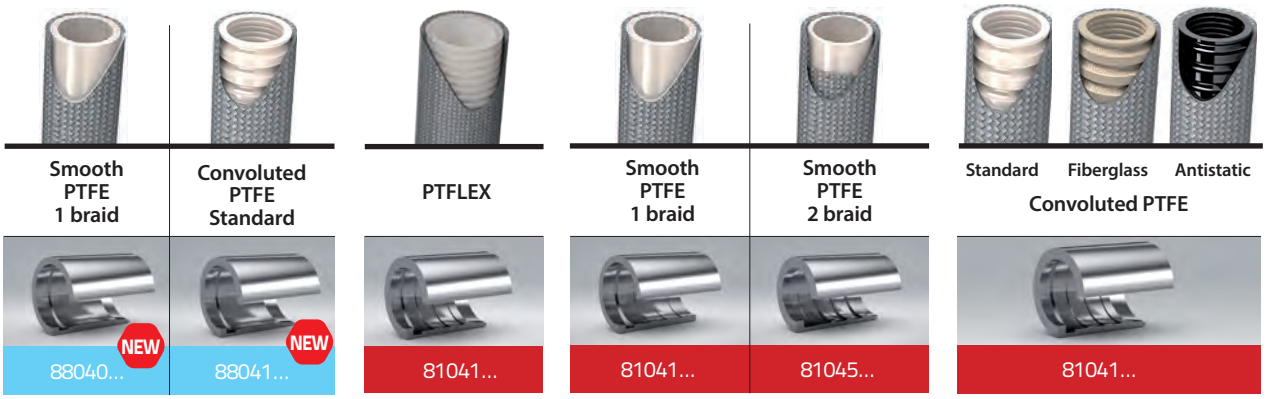

Datos de tablas de prensado siempre actualizados en nuestra web: www.dicsaes.com / Crimping information always updated on our website: www.dicsaes.com

Consulta nuestras mangueras con cubiertas Gold RockCover / Check our Hoses with Gold RockCover

TrΔle® | TrΔle® GOLD | GREENLINE

SERIE BW NO PELAR

BW Series no skive

EN 856 4SP SAE 100	EN 856 4SH	EN 856 R12 SAE 100	EN 856 R13 SAE 100	SAE 100 R15
ZAC68010	ZAC68010	ZAC68010	ZAC69010	ZAC69010
			1" 1/4-1" 1/2-2"	

SERIE INTERLOCK

Interlock series

EN 856 4SH	EN 856 R13 SAE 100	SAE 100 R15
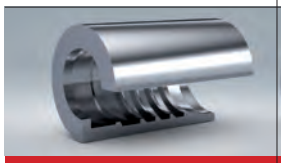	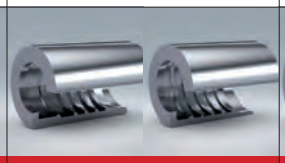	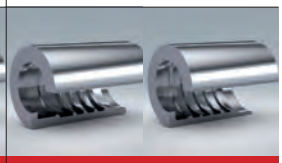
ZA61010...	ZA61010... Z61010...	ZA61010... Z61010...

SERIE COMPACTA

One Piece Series
Série Pré-sertis
Serie Compatti

Conexiones compactas 1SC / 1SN / 2SC / R6 / 2TE

One piece fittings 1SC / 1SN / 2SC / R6 / 2TE
Embouts pré-sertis 1SC / 1SN / 2SC / R6 / 2TE
Raccordi compatti 1SC / 1SN / 2SC / R6 / 2TE

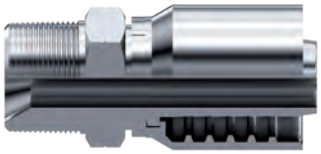

EN 857 1SC	EN 853 1 SN SAE 100 R1AT	EN 857 2SC	EN 854 SAE 100 R6	EN 854 2TE

Conexiones compactas Serie 43 R1AT / R2AT / 1SN / 2SN / R16 / 2SC / 3TE/R17

One piece fittings 43 Series R1AT / R2AT / 1SN / 2SN / R16 / 2SC / 3TE/R17
Embouts pré-sertis R1AT / R2AT / 1SN / 2SN / R16 / 2SC Série 43 / 2TE/ R17
Raccordi compatti R1AT / R2AT / 1SN / 2SN / R16 / 2SC Serie 43 /3TE /R17

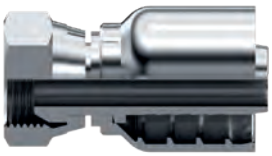

EN 853 1SN SAE 100R1AT	EN 853 2 SN SAE 100 R2AT	EN 857 2SC SAE 100 R16	SUPERSERVICE 155° 2SC	3TE

Conexiones compactas Serie BWS NO PELAR 3SP / 4SP /4SH / R12

One piece fittings Standar Series NON SKIVE 3SP / 4SP / 4SH / R12
Embouts pré-sertis SANS DÉNUDÉ 3SP / 4SP / 4SH / R12
Raccordi compatti SENZA PELATURA 3SP / 4SP / 4SH / R12

3SP	EN 856 4SP SAE 100 R9R	EN 856 4SH	EN856 R12 SAE 100	EN 856 R13 SAE 100	SAE 100 R15
				3/4"-1"	

Conexiones compactas Serie BW+ NO PELAR R13 / R15

One piece fittings BW+ Series NON SKIVE R13 / R15
Embouts pré-sertis BW+ SANS DÉNUDÉ R13 / R15
Raccordi compatti BW+ SENZA PELATURA R13 / R15

EN 856 SAE 100 R13	SAE 100 R15

Conexiones compactas R7 / R8 y elastómero malla metálica

Piece fittings R7 / R8 & braid of steel wire
Embouts pré-sertis R7 / R8 et tresse métallique
Raccordi compatti serie R7 / R8 e elastomero treccia metallica

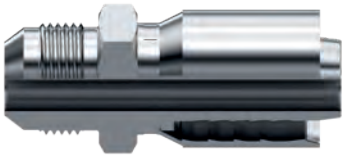

SAE 100 R7	SAE 100 R8	Metallic braid elastomer

Conexiones compactas PTFE liso R14

One piece fittings for smooth PTFE R14
Embouts pré-sertis pour PTFE lisse R14
Raccordi compatti serie PTFE liscio R14

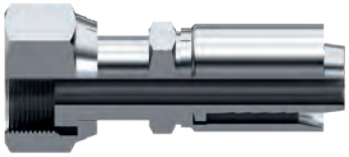

Smooth PTFE 1 braid

Conexiones compactas PTFE corrugado

One piece fittings for convoluted PTFE
Embouts pré-sertis pour PTFE convolute
Raccordi compatti serie PTFE corrugato

Convoluted PTFE

Conexiones compactas Serie BW R12 / 4SP / 4SH

One piece fittings BW Series R12 / 4SP / 4SH
Embouts pré-sertis R12 / 4SP / 4SH Série BW
Raccordi compatti R12 / 4SP / 4SH Serie BW

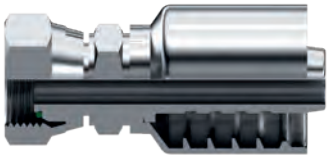

EN 856 R12	EN 856 4SP	4 SH

CONEXIONES STANDARD

Standard series
Embouts série standard
Serie Standard

Casquillos para prensar ▪ Crimping ferrules ▪ Jupes à sertir ▪ Boccole a pressare | 23

Conexiones BSP ▪ BSP Fittings ▪ Embouts BSP ▪ Raccordi BSP | 26

Conexiones NPT-NPSM ▪ NPT-NPSM Fittings ▪ Embouts NPT-NPSM ▪ Raccordi NPT-NPSM | 30

Conexiones JIC 37° ▪ JIC 37° Fittings ▪ Embouts JIC 37° ▪ Raccordi JIC 37° | 31

Conexiones Métricas DIN 2353 ▪ Metric fittings ▪ Embouts Métriques ▪ Raccordi Metrici | 33

Espigas lisas ▪ Standpipes ▪ Embouts lisses ▪ Estremitá tubolari | 36

Conexiones Varias ▪ Other Fittings ▪ Autres ▪ Raccordi vari | 37

Orientables ▪ Banjos ▪ Embouts Banjo ▪ Raccordi ad occhio | 38

CONEXIONES STANDARD

Standard series
Embouts série standard
Serie Standard

Terminales hidrolavadoras ▪ Hydrowashing machine couplings ▪ Embouts pour hydronettoyage ▪ Raccordi per idropulitrici | 38

83050 KZTHAP

Bridas SAE ▪ SAE Flanges/Code 61 & 62 ▪ Brides SAE ▪ Flange SAE | 39

84182 84183 84184 84282 84283 84284

Bridas para flexibles ▪ SAE Flanges for hoses ▪ Brides SAE pour flexibles ▪ Flange per tubi flessibili | 40

ZBBP ZBBE ZTB ZBCE JBR ORING

Conexiones ORFS ▪ ORFS Fittings ▪ Embouts ORFS ▪ Raccordi ORFS | 41

84901 84912 84907 84908

Conexiones O´Ring Boss ▪ O´Ring Boss Fittings ▪ Embouts O´Ring Boss ▪ Raccordi O´Ring Boss | 41

84712

CONEXIONES SERIE BW R12/4SP/4SH NO PELAR

Fittings BW Series R12/4SP/4SH No Skive
Embouts R12/4SP/4SH Série BW Sans dénuder
Raccordi R12/4SP/4SH Serie BW senza spellatura

Casquillos para conexiones serie BW ▪ Ferrules for fittings BW series ▪ Jupes pour embouts série BW ▪ Boccole a pressare per raccordi serie BW | 42

ZAC68010 ZAC69010

Conexiones BSP ▪ BSP fittings ▪ Embouts BSP ▪ Raccordi BSP | 42

Z66117 Z66112 Z66410 Z66118

Conexiones NPT/NPSM ▪ NPT/NPSM fittings ▪ Embouts NPT/NPSM ▪ Raccordi NPT/NPSM | 43

Z66461 Z66161

Conexiones JIC 37° ▪ JIC 37° fittings ▪ Embouts JIC ▪ Raccordi JIC 37° | 43

Z66242 Z66138 Z66139 Z66141

Conexiones ORFS ▪ ORFS fittings ▪ Embouts ORFS ▪ Raccordi ORFS | 44

Z66901 Z66907 Z66908 Z66912

Conexiones Métricas DIN 2353 ▪ Metric fittings ▪ Embouts Métriques ▪ Raccordi Metrici | 44

Z66204 Z66205 Z66206 Z66203

Bridas SAE ▪ SAE Flanges/ Code 61 & 62 ▪ Brides SAE ▪ Flange SAE | 45

Z66182 Z66183 Z66184 Z66282 Z66283 Z66284

CONEXIONES INTERLOCK

Interlock series
Embouts Interlock
Serie Interlock

Casquillos Interlock ▪ Interlock Crimping ferrules ▪ Jupes à sertir Interlock ▪ Boccole a pressare | 46

ZA61010 Z61010

Conexiones BSP y NPT ▪ Interlock BSP & NPT fittings ▪ Embouts à sertir Interlock BSP et NPT ▪ Raccordi BSP, NPT | 46

Z64100 Z64107 Z64112 Z64108 Z64161 Z64500 Z64507 Z64508

Conexiones JIC 37° ▪ Interlock JIC 37° fittings ▪ Embouts à sertir Interlock JIC ▪ Raccordi JIC 37° | 48

Z64242 Z64142 Z64140 Z64138 Z64139

Conexiones Métricas DIN 2353 ▪ Interlock Metric fittings ▪ Embouts Métrique Interlock ▪ Raccordi Metrici | 49

Z64204 Z64205 Z64206 Z64203

Conexiones ORFS ▪ Interlock ORFS fittings ▪ Embouts à sertir Interlock ORFS ▪ Raccordi ORFS | 49

Z64901 Z64912 Z64907 Z64908

Bridas SAE ▪ Interlock SAE Flanges/ Code 61 & 62 ▪ Brides SAE Interlock ▪ Flange SAE | 50

Z64182 Z64183 Z64184 Z64282 Z64283 Z64284

CONEXIONES UNA SOLA PIEZA SERIE 43 R1AT/R2AT/1SN/2SN/R16/2SC/R17

One piece fittings 43 Series R1AT/R2AT/1SN/2SN/R16/2SC/R17
Embouts pré-sertis R1AT/R2AT/1SN/2SN/R16/2SC/R17 Série 43
Raccordi compatti R1AT/R2AT/1SN/2SN/R16/2SC/R17 Serie 43

Conexiones una sola pieza JIC 37° ▪ One piece JIC 37° fittings ▪ Embouts pré-sertis JIC 37° ▪ Raccordi compatti JIC 37° | 51

88142 88138 88139 88140 88242

Conexiones una sola pieza ORFS ▪ One piece ORFS fittings ▪ Embouts pré-sertis ORFS ▪ Raccordi compatti ORFS | 52

88900 88907 88908 88912

Conexiones una sola pieza NPT-NPSM ▪ One piece NPT-NPSM fittings ▪ Embouts pré-sertis NPT-NPSM ▪ Raccordi compatti NPT-NPSM | 53

88261 88262 88263 88161 88361 88165

Conexiones una sola pieza Bridas SAE ▪ One piece SAE Flanges fittings ▪ Embouts pré-sertis Brides SAE ▪ Raccordi compatti Flange SAE | 54

88182 88183 88184 88282 88283 88284

Conexiones una sola pieza Métricas ▪ One piece Metric fittings ▪ Embouts pré-sertis Métriques ▪ Raccordi compatti Metrici | 55

88804 88305 88306 88203

Conexiones una sola pieza BSP ▪ One piece BSP fittings ▪ Embouts pré-sertis BSP ▪ Raccordi compatti BSP | 56

88100 88107 88108 88112 88400 88200

CONEXIONES UNA SOLA PIEZA SERIE BWS 3SP/4SP/R12/4SH NO PELAR

One piece fittings BWS Series 3SP/4SP/R12/4SH No Skive
Embouts pré-sertis Série BWS 3SP/4SP/R12/4SH Sans dénuder
Raccordi Compatti Serie BWS 3SP/4SP/R12/4SH senza spellatura

Conexiones una sola pieza JIC 37° ▪ One piece JIC 37° fittings ▪ Embouts pré-sertis JIC 37° ▪ Raccordi compatti JIC 37° | 57

Z58140 Z58142 Z58138 Z58139 Z58242

Conexiones una sola pieza ORFS ▪ One piece ORFS fittings ▪ Embouts pré-sertis ORFS ▪ Raccordi compatti ORFS | 58

Z58901 Z58907 Z58908 Z58912

Conexiones una sola pieza NPT-NPSM ▪ One piece NPT-NPSM fittings ▪ Embouts pré-sertis NPT-NPSM ▪ Raccordi compatti NPT-NPSM | 59

Z58261 Z58262 Z58263 Z58161 Z58361

Conexiones una sola pieza Bridas SAE ▪ One piece SAE Flanges fittings/ Code 61 & 62 ▪ Embouts pré-sertis Brides SAE ▪ Raccordi compatti Flange SAE | 60

Z58182 Z58183 Z58184 Z58212 Z58283 Z58284

Conexiones una sola pieza Métricas ▪ One piece Metric fittings ▪ Embouts pré-sertis Métriques ▪ Raccordi compatti Metrici | 61

Z58804 Z58305 Z58306 Z58203

Conexiones una sola pieza BSP ▪ One piece BSP fittings ▪ Embouts pré-sertis BSP ▪ Raccordi compatti BSP | 62

Z58110 Z58117 Z58118 Z58112 Z58400 Z58200

CONEXIONES UNA SOLA PIEZA R7/ R8/ ELASTÓMERO MALLA METÁLICA

One piece fittings R7/R8 & Elastomer Braid of steel wire
Embouts pré-sertis R7/R8 et Elastomère tresse métallique
Raccordi compatti serie R7/R8 e elastomero treccia metallica

Conexiones una sola pieza R7/R8 JIC 37° ▪ 37° JIC One piece fittings R7/R8 ▪ Embouts pré-sertis R7/R8 JIC 37° ▪ Raccordi compatti serie R7/R8 JIC sede 37° | 63

87142 87138 87139 87140 87242

Conexiones una sola pieza R7/R8 ORFS ▪ ORFS One piece fittings R7/R8 ▪ Embouts pré-sertis R7/R8 ORFS ▪ Raccordi compatti serie R7/R8 ORFS | 64

87900 87907 87908 87912

Conexiones una sola pieza R7/R8 NPT-NPSM ▪ NPT-NPSM One piece fittings R7/R8 ▪ Embouts pré-sertis R7/R8 NPT-NPSM ▪ Raccordi compatti serie R7/R8 NPT-NPSM | 65

87261 87262 87263 87161 87361

Conexiones una sola pieza R7/R8 Métricas ▪ Metric One piece fittings R7/R8 ▪ Embouts pré-sertis R7/R8 Métriques ▪ Raccordi compatti serie R7/R8 Metrici | 66

87804 87305 87306 87203

Conexiones una sola pieza R7/R8 BSP ▪ BSP One piece fittings R7/R8 ▪ Embouts pré-sertis R7/R8 BSP ▪ Raccordi compatti serie R7/R8 BSP | 67

87100 87107 87108 87112 87400

CONEXIONES UNA SOLA PIEZA PTFE LISO / R14

One piece fittings for Smooth PTFE/ R14
Embouts pré-sertis pour PTFE lisse/ R14
Raccordi compatti per PTFE liscio/ R14

Conexiones una sola pieza PTFE liso / R14 JIC 37° ▪ 37° JIC One piece fittings smooth PTFE / R14 ▪ Embouts pré-sertis PTFE lisse / R14 JIC 37° ▪ Raccordi compatti serie PTFE liscio / R14 JIC 37° | 68

86142 86138 86139 86140 86242

Conexiones una sola pieza PTFE liso / R14 ORFS ▪ ORFS One piece fittings smooth PTFE / R14 ▪ Embouts pré-sertis PTFE lisse / R14 ORFS ▪ Raccordi compatti serie PTFE liscio / R14 ORFS | 69

86900 86907 86908 86912

Conexiones una sola pieza PTFE liso/ R14 NPT-NPSM ▪ NPT-NPSM One piece fittings smooth PTFE / R14 ▪ Embouts pré-sertis PTFE lisse / R14 NPT-NPSM ▪ Raccordi compatti serie PTFE liscio / R14 NPT-NPSM | 70

86261 86262 86263 86161 86361

Conexiones una sola pieza PTFE liso / R14 Métricas ▪ Metric One piece fittings smooth PTFE / R14 ▪ Embouts pré-sertis PTFE lisse / R14 Métriques ▪ Raccordi compatti serie PTFE liscio / R14 Metrici | 71

86804 86305 86306 86203

Conexiones una sola pieza PTFE liso / R14 BSP ▪ BSP One piece fittings smooth PTFE / R14 ▪ Embouts pré-sertis PTFE lisse/ R14 BSP ▪ Raccordi compatti serie PTFE liscio / R14 BSP | 72

86100 86107 86108 86112 86400

CONEXIONES UNA SOLA PIEZA PTFE CORRUGADO

One piece fittings for convoluted PTFE
Embouts pré-sertis pour PTFE convoluté
Raccordi compatti per PTFE corrugato

Conexiones una sola pieza PTFE Corrugado JIC 37° ▪ One piece fittings for convoluted PTFE JIC 37° ▪ Embouts pré-sertis pour PTFE convoluté JIC 37° ▪ Raccordi compatti serie PTFE convoluto JIC 37° | 73

85142 85138 85139 85140 85242

Conexiones una sola pieza PTFE Corrugado ORFS ▪ One piece fittings for convoluted PTFE ORFS ▪ Embouts pré-sertis pour PTFE convoluté ORFS ▪ Raccordi compatti serie PTFE convoluto ORFS | 74

85900 85907 85908 85912

Conexiones una sola pieza PTFE Corrugado NPT-NPSM ▪ One piece fittings for convoluted PTFE NPT-NPSM ▪ Embouts pré-sertis pour PTFE convoluté NPT-NPSM ▪ Raccordi compatti serie PTFE convoluto NPT-NPSM | 75

85261 85262 85263 85161 85361

Conexiones una sola pieza PTFE Corrugado Métricas ▪ One piece fittings for convoluted PTFE Metrical ▪ Embouts pré-sertis pour PTFE convoluté Métriques ▪ Raccordi compatti serie PTFE convoluto METRICI | 76

85804 85305 85306 85203

Conexiones una sola pieza PTFE Corrugado BSP ▪ One piece fittings for convoluted PTFE BSP ▪ Embouts pré-sertis pour PTFE convoluté BSP ▪ Raccordi compatti serie PTFE convoluto BSP | 77

85100 85107 85108 85112 85400

CONEXIONES UNA SOLA PIEZA SERIE BW R12/4SP/4SH NO PELAR

One piece fittings BW Series R12/4SP/4SH No Skive
Embouts pré-sertis R12/4SP/4SH Série BW Sans dénuder
Raccordi Compatti R12/4SP/4SH Serie BW senza spellatura

Conexiones una sola pieza JIC 37° ▪ One piece JIC 37° fittings ▪ Embouts pré-sertis JIC ▪ Raccordi compatti JIC 37° | 78

Z68242 Z68141 Z68138 Z68139

Conexiones una sola pieza ORFS ▪ One piece ORFS fittings ▪ Embouts pré-sertis ORFS ▪ Raccordi compatti ORFS | 79

Z68901 Z68907 Z68908 Z68912

Conexiones una sola pieza NPT/NPSM ▪ One piece NPT/NPSM fittings ▪ Embouts pré-sertis NPT/NPSM ▪ Raccordi compatti NPT/NPSM | 79

Z68461 Z68161

Conexiones una sola pieza Bridas SAE ▪ One piece SAE Flanges/ Code 61 & 62 ▪ Brides SAE pré-serties ▪ Flange SAE compatta | 80

Z68182 Z68183 Z68184 Z68282 Z68283 Z68284

Conexiones una sola pieza Métricas DIN 2353 ▪ One piece Metric fittings ▪ Embouts pré-sertis Métriques ▪ Raccordi compatti Metrici | 81

Z68204 Z68203 Z68205 Z68206

Conexiones una sola pieza BSP ▪ One piece BSP fittings ▪ Embouts pré-sertis BSP ▪ Raccordi compatti BSP | 82

Z68410 Z68117 Z68118 Z68112

CONEXIONES UNA PIEZA SERIE BW+ R13/R15 NO PELAR

One piece fittings BW+ Series R13/R15 No Skive
Embouts R13/R15 Série BW+ Sans denuder
Raccordi R13/R15 Serie BW+ senza spellatura

Conexiones JIC 37° ▪ JIC 37° fittings ▪ Embouts JIC 37° ▪ Raccordi JIC 37°

Z69242 Z69141 Z69138 Z69139

Conexiones ORFS ▪ ORFS fittings ▪ Embouts ORFS ▪ Raccordi ORFS

Z69901 Z69907 Z69908 Z69912

Conexiones NPT/NPSM ▪ NPT/NPSM fittings ▪ Embouts NPT/NPSM ▪ Raccordi NPT/NPSM

Z69361 Z69161

Bridas SAE ▪ SAE Flanges ▪ Brides SAE ▪ Flange SAE

Z69282 Z69283 Z69284

Conexiones BSP ▪ BSP fittings ▪ Embouts BSP ▪ Raccordi BSP

Z69112 Z69410 Z69117 Z69118

CASQUILLOS PARA CONEXIONES UNA SOLA PIEZA

Ferrules for one piece fittings
Jupes pour embouts pré-sertis
Boccole per raccordi compatti

Casquillos para Conexiones una sola pieza ▪ Ferrules for one piece fittings ▪ Jupes pour embouts pré-sertis ▪ Boccole per raccordi compatti

ZPFC2212

ZPF2224

88012

88040

88041

ZSCC2112

ZAC68010

ZAC69010

CONEXIONES REUSABLES

Reusable series
Embouts série récupérable
Serie Recuperabile

Casquillos reusables ▪ Crimping ferrules ▪ Jupes à sertir ▪ Boccole recuperabili | 89

Z1G...R1T

Z1G...R2T

Conexiones BSP ▪ Reusable BSP ▪ Récuperables BSP ▪ Raccordi recuperabili BSP | 89

Z3G

Z90G

Z2G

Conexiones JIC 37° ▪ Reusable JIC 37° ▪ Récuperables JIC 37° ▪ Raccordi recuperabili JIC | 90

Z3J

Z2J

Z3J90

Z3J45

Conexiones NPT ▪ Reusable NPT ▪ Récuperables NPT ▪ Raccordi recuperabili NPT | 90

Z2NPT

Conexiones Métricas ▪ Reusable Metric ▪ Récuperables Métriques ▪ Raccordi recuperabili Metrici | 90

ZE

Conexiones R5 ▪ Reusable R5 ▪ Récuperables R5 ▪ Raccordi recuperabili R5 | 91

Z3J...R5

Z3J90...R5

Z3J45...R5

Z2P...R5

CONEXIONES PUSH-ON

Push-On Fittings
Embouts Push-On
Raccordi Serie Push-On

Conexiones Push-On BSP ▪ Push-on BSP fittings ▪ Embouts Push-on BSP ▪ Raccordi Serie Push-on BSP | 92

89100

89112

Conexiones Push-On JIC 37° ▪ Push-on 37° JIC fittings ▪ Embouts Push-on JIC 37° ▪ Raccordi Serie Push-on JIC 37° | 92

89142

89140

Conexiones Push-On NPT ▪ Push-on NPT fittings ▪ Embouts Push-on NPT ▪ Raccordi Serie Push-on NPT | 92

89161

Conexiones Push-On Métricas ▪ Push-on Metric fittings ▪ Embouts Push-on Métriques ▪ Raccordi Serie Push-on Metrici | 92

89804

89203

CONEXIONES ALTA PRESIÓN (700 BAR)

High pressure 700 bar fittings
Embouts haute pression 700 bar
Raccordi Altissima pressione (700 bar)

Casquillos para prensar ▪ Ferrules ▪ Jupes à sertir ▪ Boccole | 93

Z71012

Conexiones BSP ▪ BSP Fittings ▪ Embouts BSP ▪ Raccordi BSP | 93

Z74100

Z74112

Conexiones NPSM - NPT ▪ NPSM - NPT Fittings ▪ Embouts NPSM - NPT ▪ Raccordi NPSM - NPT | 93

Z74261

Z74161

Conexiones JIC 37° ▪ JIC 37° Fittings ▪ Embouts JIC 37° ▪ Raccordi JIC 37° | 93

Z74142

Z74140

Conexiones Métricas ▪ Metric Fittings ▪ Embouts métriques ▪ Raccordi Metrici | 93

Z74804

Z74203

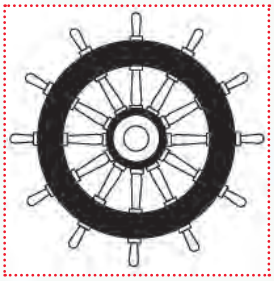

Mangueras/Hoses:

TrAIe®

Mangueras/Hoses:

SEMPERIT

CONEXIONES FABRICADAS POR DICSA
FITTINGS MANUFACTURED BY

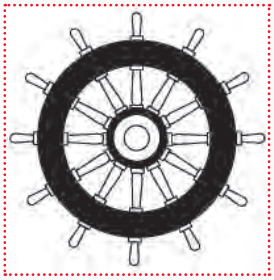

CONEXIONES STANDARD

Standard series
Embouts série standard
Serie Standard

Casquillos R1AT/R2AT/ 1SN/2SN/ R16/2SC/3TE

Ferrules R1AT/R2AT/1SN/2SN/R16/2SC/3TE

Jupes R1AT/R2AT/1SN/2SN/R16/2SC/3TE

Boccole pressare per R1AT/R2AT/1SN/2SN/ R16/2SC/3TE

DN		Referencia Part n°	€
3/16"-R1AT		810200300	12,42
3/16"-R2AT		810300300	11,85
1/4"		ZPF221200400	8,44
5/16"		ZPF221200500	9,47
3/8"		ZPF221200600	10,67
1/2"		ZPF221200800	12,78
5/8"		ZPF221201000	15,71
3/4"		ZPF221201200	21,74
1"		ZPF221201600	34,07
1"1/4		ZPF221202000	61,25
1"1/2		ZPF221202400	74,82
2"		ZPF221203200	112,48
2"1/2	NEW	ZPF221204000	171,59
3"	NEW	ZPF221204800	282,17

Casquillos R1A-1ST

Ferrules R1A-1ST

Jupes R1A-1ST

Boccole pressare per R1A-1ST

DN	Referencia Part n°	€
3/16"	820030300	10,37
1/4"	820030400	9,61
5/16"	820030500	10,02
3/8"	820030600	12,03
1/2"	820030800	13,85
5/8"	820031000	18,48
3/4"	820031200	23,63
1"	820031600	31,22
1"1/4	820032000	53,42
1"1/2	820032400	78,60
2"	820033200	113,22

Casquillos R4

Ferrules R4

Jupes R4

Boccole pressare per R4

DN	Referencia Part n°	€
3/4"	ZPF221201200R4	27,56

Para otras medidas, consultar tablas de prensado en nuestra web. */ For other sizes, please check out the crimping table on our website. /* Pour les autres dimensions, voir tableau de sertissage disponible sur notre site web. */ Per altre dimensioni, vedere tabella di pressatura nel ns. sito web*

Casquillos 1SC/1SN/2SC/R6/2TE/R17

Ferrules 1SC/1SN/2SC/R6/2TE/R17

Jupes 1SC/1SN/2SC/R6/2TE/R17

Boccole pressare per 1SC/1SN/2SC/R6/2TE/R17

DN	Referencia Part n°	€
1/4"	ZSC21120400	9,77
5/16"	ZSC21120500	12,37
3/8"	ZSC21120600	11,87
1/2"	ZSC21120800	13,48
5/8"	ZSC21121000	18,39
3/4"	ZSC21121200	24,80
1"	ZSC21121600	38,89

Casquillos R2A-2ST/4SP-R9R / R12

Ferrules R2A-2ST/4SP-R9R / R12

Jupes R2A-2ST/4SP-R9R / R12

Boccole pressare per R2A-2ST/4SP-R9R / R12

DN	Referencia Part n°	€
3/16" - R2A	820060300	9,53
1/4"	ZPF122400400	9,89
5/16"	ZPF122400500	10,55
3/8"	ZPF122400600	11,14
1/2"	ZPF122400800	13,11
5/8"	ZPF122401000	19,20
3/4"	ZPF122401200	20,91
1"	ZPF122401600	34,50
1"1/4	ZPF122402000	59,52
1"1/2	ZPF122402400	78,93
2"	ZPF122403200	118,35

Casquillos 3SP/4SP/R12/4SH no pelar

Ferrules 3SP/4SP/R12/4SH non skive

Jupes 3SP/4SP/R12/4SH sans dénudage

Boccole pressare per 3SP/4SP/R12/4SH senza spellatura

DN		Referencia Part n°	€
3/8"		ZPF222400600	10,84
1/2"		ZPF222400800	13,69
5/8"		ZPF222401000	25,13
3/4"		ZPF222401200	22,46
1"		ZPF222401600	35,03
1" 1/4		ZPF222402000	65,75
1" 1/2	NEW	ZPF222402400	94,12
2"	NEW	ZPF222403200	133,77

CONEXIONES STANDARD

Standard series
Embouts série standard
Serie Standard

Casquillos R7/R8 y elastómero malla metálica / R6

Ferrules R7/R8 and metallic braid / R6

Jupes R7/R8 et tresse métallique / R6

Boccole pressare per R7/R8 e elastomero treccia metallica / R6

DN	Referencia Part n°	€
1/8"	810140200	8,12
3/16"	810140300	8,09
1/4"	810140400	8,00
5/16"	810140500	8,35
3/8"	810140600	9,32
1/2"	810140800	11,51
5/8"	810141000	18,97
3/4"	810141200	16,41
1"	810141600	28,64

Casquillos para mangueras Ecology y limpieza de alcantarillas

Ferrules for Ecology hose and Sewer Jetting hose

Jupes pour tuyau Ecology et tuyau Hydrocurage

Boccole pressare per tubi Ecology e pulizia fossa biologica

DN	Referencia Part n°	€
3/4"	Z212001200	34,69
1"	Z212001600	51,62
1"1/4	Z212002000	71,84

Casquillos PTFE Liso

Ferrules for smooth PTFE

Jupes PTFE lisse

Boccole pressare per PTFE liscio

DN	Referencia Part n°	€
1/8"	810400100	8,37
3/16"	810400300	7,91
1/4"	810400400	6,79
5/16"	810400500	8,63
3/8"	810400600	7,16
1/2"	810400800	9,22
5/8"	810401000	12,62
3/4"	810401200	14,14
1"	810401600	22,72

Casquillos PTFE Corrugado

Ferrules for convoluted PTFE

Jupes PTFE convoluté

Boccole pressare per PTFE corrugato

DN	Referencia Part n°	€
1/4"	810410400	7,99
5/16"	810410500	9,10
3/8"	810410600	9,05
1/2"	810410800	9,98
5/8"	810411000	15,76
3/4"	810411201	17,82
1"	810411600	26,45
1"1/4	810412000	41,18
1"1/2	810412400	53,09
2"	810413200	88,78
2"1/2	810414000	118,16

Casquillos PTFE Liso doble malla

Ferrules for double braid smooth PTFE

Jupes PTFE lisse double tresse

Boccole pressare per PTFE liscio doppia treccia

DN	Referencia Part n°	€
1/4"	810450400	8,79
3/8"	810450600	12,90

Para otros tamaños, consultar tabla de prensado en nuestra web. */ For other sizes, please check out the crimping table on our website. /* Pour les autres dimensions, voir tableau de sertissage disponible sur notre site web. */ Per altre dimensioni, vedere tabella di pressatura nel ns. sito web*

Casquillos PTFE Liso, perfil liso

NEW

Ferrules for smooth PTFE, smooth profile

Jupes PTFE lisse,profil lisse

Boccole pressare per PTFE liscio, profilo liscio

DN	Referencia Part n°	€
1/4"	880400400	6,81
5/16"	880400500	8,59
3/8"	880400600	8,07
1/2"	880400800	9,02
5/8"	880401000	17,01

Casquillos PTFE Corrugado, perfil liso

NEW

Ferrules for convoluted PTFE, smoth proflie

Jupes PTFE convoluté, profil lisse

Boccole pressare per PTFE corrugato, profilo liscio

DN	Referencia Part n°	€
1/4"	880410400	8,05
5/16"	880410500	7,28
3/8"	880410600	8,28
1/2"	880410800	10,94
5/8"	880411000	14,82
3/4"	880411200	17,41

Para otras medidas 81041, pág 24

TrΔle® GOLD + RACOR INOX
STAINLESS STEEL FITTING

COMBINACIÓN PERFECTA PARA OFFSHORE
A PERFECT MATCH FOR OFFSHORE

CONEXIONES STANDARD

Standard series
Embouts série standard
Serie Standard

Hembras giratorias rectas rosca BSP cono 60°

BSP Swivel female 60° cone

Femelle gaz cylindrique BSP 60°

Femmina diritta BSP sede 60°

DN	ROSCA THREAD		Referencia Part n°	€
3.2 mm	1/8" BSP		841000201	16,62
1/8"	1/8" BSP		841000202	15,98
3/16"	1/8" BSP		841000203	13,21
1/4"	1/8" BSP		841000204	13,73
3/16"	1/4" BSP		841000403	12,08
1/4"	1/4" BSP		841000404	10,18
5/16"	1/4" BSP		841000405	12,59
3/8"	1/4" BSP		841000406	15,24
1/4"	3/8" BSP		841000604	14,34
5/16"	3/8" BSP		841000605	13,84
3/8"	3/8" BSP		841000606	12,26
1/2"	3/8" BSP		841000608	14,88
3/8"	1/2" BSP		841000806	16,39
1/2"	1/2" BSP		841000808	15,11
5/8"	1/2" BSP		841000810	25,52
1/2"	5/8" BSP		841001008	26,76
5/8"	5/8" BSP		841001010	30,67
1/2"	3/4" BSP		841001208	27,92
5/8"	3/4" BSP		841001210	25,17
3/4"	3/4" BSP		841001212	24,54
3/4"	1" BSP		841001612	40,66
1"	1" BSP		841001616	39,23
1"	1"1/4 BSP		841002016	74,14
1"1/4	1"1/4 BSP		841002020	76,32
1"1/4	1"1/2 BSP		841002420	103,64
1"1/2	1"1/2 BSP		841002424	90,99
1"1/2	2" BSP		841003224	179,20
2"	2" BSP		841003232	165,72
2"	2"1/2 BSP	NEW	841004032	306,49
2"1/2	2"1/2 BSP	NEW	841004040	323,85
3"	3" BSP	NEW	841004848	327,76

Hembras giratorias rectas rosca BSP cono 60° con junta tórica

BSP Swivel female 60° cone with o-ring

Femelle gaz cylindrique BSP 60° avec o-ring

Femmina diritta BSP sede 60° con o'ring

DN	ROSCA THREAD		Referencia Part n°	€
1/4"	1/4" BSP		841100404	14,62
3/8"	3/8" BSP		841100606	14,76
3/8"	1/2" BSP		841100806	23,70
1/2"	1/2" BSP		841100808	17,56
1/2"	3/4" BSP		841101208	32,73
5/8"	1/2" BSP	NEW	841100810	30,57
5/8"	3/4" BSP		841101210	32,83
3/4"	3/4" BSP		841101212	24,88
1"	1" BSP		841101616	46,08
1"1/4	1"1/4 BSP		841102020	77,74
1"1/2	1"1/2 BSP		841102424	106,33
2"	2" BSP		841103232	202,06

Hembras giratorias rectas rosca BSP asiento plano

BSP Swivel female flat seat

Femelle fond plat BSP

Femmina BSP sede piana

DN	ROSCA THREAD		Referencia Part n°	€
1/4"	1/4" BSP		842000404	11,98
1/4"	3/8" BSP		842000604	20,74
5/16"	3/8" BSP		842000605	19,62
3/8"	3/8" BSP		842000606	13,70
1/2"	3/8" BSP		842000608	21,89
1/4"	1/2" BSP		842000804	33,68
3/8"	1/2" BSP		842000806	20,71
1/2"	1/2" BSP		842000808	16,72
1/2"	3/4" BSP		842001208	31,31
5/8"	3/4" BSP		842001210	29,95
3/4"	3/4" BSP		842001212	25,21
5/8"	1" BSP	NEW	842001610	50,38
3/4"	1" BSP		842001612	42,60
1"	1" BSP		842001616	42,37
1"	1" 1/4 BSP		842002016	78,97
1"1/4	1"1/4 BSP		842002020	79,31
1"1/2	1"1/2 BSP		842002424	97,80
2"	2" BSP		842003232	182,29

Hembras giratorias recta rosca BSP cono 60° doble hexagonal

Double hexagonal BSP Swivel female cone 60°

Femelle BSP cone 60° double hexagonal

Femmina diritta BSP sede 60° doppio esagono

DN	ROSCA THREAD	Referencia Part n°	€
1/4"	1/4" BSP	844000404	21,74
5/16"	3/8" BSP	844000605	25,76
3/8"	3/8" BSP	844000606	22,37
1/2"	1/2" BSP	844000808	24,88
3/4"	3/4" BSP	844001212	40,53
1"	1" BSP	844001616	64,48
1"1/4	1"1/4 BSP	844002020	86,77
1"1/2	1"1/2 BSP	844002424	135,67
2"	2" BSP	844003232	236,01

CONEXIONES STANDARD

Standard series
Embouts série standard
Serie Standard

Hembras giratorias 90° rosca BSP cono 60°

BSP Swivel female 60° cone (90° Elbow)

Coude 90° femelle gaz cyl. BSP 60°

Femmina 90° BSP sede 60°

DN	ROSCA THREAD		Referencia Part n°	€
3/16"	1/8" BSP		841070203*	35,71
1/4"	1/8" BSP	NEW	841070204	28,01
3/16"	1/4" BSP		841070403	25,02
1/4"	1/4" BSP		841070404	19,69
5/16"	1/4" BSP		841070405*	40,42
1/4"	3/8" BSP		841070604	28,11
5/16"	3/8" BSP		841070605	28,66
3/8"	1/4" BSP	NEW	841070406	27,52
3/8"	3/8" BSP		841070606	22,69
1/4"	1/2" BSP		841070804	43,70
3/8"	1/2" BSP		841070806	37,33
1/2"	1/2" BSP		841070808	28,26
5/8"	5/8" BSP		841071010	50,56
1/2"	3/4" BSP		841071208	50,53
5/8"	3/4" BSP		841071210	55,29
3/4"	3/4" BSP		841071212	47,14
3/4"	1" BSP		841071612	70,11
1"	1" BSP		841071616	70,95
1"	1" 1/4 BSP		841072016	155,05
1"1/4	1"1/4 BSP		841072020	141,58
1"1/2	1"1/2 BSP		841072424	191,53
2"	2" BSP		841073232	361,81

***Pieza soldada** / **Welded piece* / *Pièce soudé / **Tipo saldato*

Hembras giratorias 90° rosca BSP asiento plano

BSP Swivel female flat seat (90° Elbow)

Coude 90° femelle fond plat BSP

Femmina 90° BSP sede piana

DN	ROSCA THREAD	Referencia Part n°	€
1/4"	1/4" BSP	842070404	26,85
5/16"	3/8" BSP	842070605	32,42
3/8"	3/8" BSP	842070606	29,83
1/2"	1/2" BSP	842070808	35,71
3/4"	3/4" BSP	842071212	51,38
3/4"	1" BSP	842071612	83,73
1"	1" BSP	842071616	80,13
1"1/4	1"1/4 BSP	842072020	158,63
1"1/2	1"1/2 BSP	842072424	204,83
2"	2" BSP	842073232	453,47

Hembras giratorias 45° rosca BSP cono 60°

BSP Swivel female 60° cone (45° Elbow)

Coude 45° femelle gaz cyl. BSP 60°

Femmina 45° BSP sede 60°

DN	ROSCA THREAD	Referencia Part n°	€
3/16"	1/4" BSP	841080403	25,02
1/4"	1/4" BSP	841080404	19,69
1/4"	3/8" BSP	841080604	28,11
5/16"	3/8" BSP	841080605	28,66
3/8"	3/8" BSP	841080606	22,69
1/4"	1/2" BSP	841080804	43,70
3/8"	1/2" BSP	841080806	37,33
1/2"	1/2" BSP	841080808	28,26
5/8"	5/8" BSP	841081010	50,56
1/2"	3/4" BSP	841081208	50,53
5/8"	3/4" BSP	841081210	55,29
3/4"	3/4" BSP	841081212	47,14
3/4"	1" BSP	841081612	70,11
1"	1" BSP	841081616	70,95
1"	1"1/4 BSP	841082016	155,05
1"1/4	1"1/4 BSP	841082020	141,58
1"1/2	1"1/2 BSP	841082424	191,53
2"	2" BSP	841083232	361,81

Hembras giratorias 45° rosca BSP asiento plano

BSP Swivel female flat seat (45° Elbow)

Coude 45° femelle fond plat BSP

Femmina 45° BSP sede piana

DN	ROSCA THREAD	Referencia Part n°	€
1/4"	1/4" BSP	842080404	26,85
5/16"	3/8" BSP	842080605	32,42
3/8"	3/8" BSP	842080606	29,83
3/8"	1/2" BSP	842080806	40,18
1/2"	1/2" BSP	842080808	35,71
3/4"	3/4" BSP	842081212	51,38
3/4"	1" BSP	842081612	83,73
1"	1" BSP	842081616	80,13
1"1/4	1"1/4 BSP	842082020	158,63
1"1/2	1"1/2 BSP	842082424	204,83
2"	2" BSP	842083232	453,47

Hembras giratorias 90° compactas rosca BSP cono 60°

BSP swivel female 60° (90° Compact Elbow)

Coude femelle 90° compact BSP cone 60°

Femmina 90° BSP compatta

DN	ROSCA THREAD	Referencia Part n°	€
1/4"	1/4" BSP	841270404	49,48
3/8"	3/8" BSP	841270606	51,72
1/2"	1/2" BSP	841270808	80,25
3/4"	3/4" BSP	841271212	100,52
1"	1" BSP	841271616	146,56

CONEXIONES STANDARD

Standard series
Embouts série standard
Serie Standard

Hembras giratorias 90° rosca BSP cono 60° con junta tórica

BSP Swivel female 60° cone with o-ring (90° Elbow)

Coude 90° femelle gaz cyl. BSP 60° avec o-ring

Femmina 90° BSP sede 60° con o'ring

DN	ROSCA THREAD	Referencia Part n°	€
1/4"	1/4" BSP	**841170404**	**27,88**
3/8"	3/8" BSP	**841170606**	**32,66**
3/8"	1/2" BSP	**841170806**	**42,76**
1/2"	1/2" BSP	**841170808**	**37,14**
1/2"	3/4" BSP	**841171208**	**65,22**
5/8"	3/4" BSP	**841171210**	**55,43**
3/4"	3/4" BSP	**841171212**	**52,92**
1"	1" BSP	**841171616**	**84,98**
1"1/4	1"1/4 BSP	**841172020**	**160,69**
1"1/2	1"1/2 BSP	**841172424**	**221,74**
2"	2" BSP	**841173232**	**440,91**

Hembras giratorias 45° rosca BSP cono 60° con junta tórica

BSP Swivel female 60° cone with o-ring (45° Elbow)

Coude 45° femelle gaz cyl. BSP 60° avec o-ring

Femmina 45° BSP sede 60° con o'ring

DN	ROSCA THREAD	Referencia Part n°	€
1/4"	1/4" BSP	**841180404**	**27,88**
3/8"	3/8" BSP	**841180606**	**32,66**
3/8"	1/2" BSP	**841180806**	**42,76**
1/2"	1/2" BSP	**841180808**	**37,14**
1/2"	3/4" BSP	**841181208**	**65,22**
5/8"	3/4" BSP	**841181210**	**55,43**
3/4"	3/4" BSP	**841181212**	**52,92**
1"	1" BSP	**841181616**	**84,98**
1"1/4	1"1/4 BSP	**841182020**	**160,69**
1"1/2	1"1/2 BSP	**841182424**	**221,74**
2"	2" BSP	**841183232**	**440,91**

Juntas para hembra giratoria BSP FKM verde

O'ring for swivel female BSP FKM green

Joint torique pour femelle tournante BSP FKM vert

Guarnizione per femmina girevole BSP FKM verde

ROSCA THREAD	TAMAÑO SIZE	Referencia Part n°	€
1/4" BSP	6X1	**JTVBSP04**	**0,17**
3/8" BSP	8.1X1.6	**JTVBSP06**	**0,18**
1/2" BSP	12.1X1.6	**JTVBSP08**	**0,19**
5/8" BSP	13.1X1.6	**JTVBSP10**	**0,19**
3/4" BSP	17.1X1.6	**JTVBSP12**	**0,23**
1" BSP	22.1X1.6	**JTVBSP16**	**0,31**
1"1/4 BSP	29.1X1.6	**JTVBSP20**	**0,46**
1"1/2 BSP	35.1X1.6	**JTVBSP24**	**0,61**
2" BSP	47.35X1.78	**JTVBSP32**	**0,88**

CONEXIONES STANDARD

Standard series
Embouts série standard
Serie Standard

Machos rosca cilíndrica BSP asiento plano

BSP Male flat seat

Mâle BSP fond plat

Maschio BSP sede piana

DN	ROSCA THREAD		Referencia Part n°	€
3/16"	1/4" BSP		842120403	21,52
1/4"	1/4" BSP		842120404	15,41
5/16"	3/8" BSP		842120605	23,57
3/8"	3/8" BSP		842120606	17,96
1/2"	3/8" BSP	NEW	842120608	25,71
3/8"	1/2" BSP		842120806	27,28
1/2"	1/2" BSP		842120808	20,03
5/8"	5/8" BSP		842121010	39,98
3/4"	3/4" BSP		842121212	28,28
3/4"	1" BSP		842121612	59,65
1"	1" BSP		842121616	55,57
1"	1" 1/4 BSP		842122016	120,02
1"1/4	1"1/4 BSP		842122020	100,84
1"1/2	1"1/2 BSP		842122424	137,08
2"	2" BSP		842123232	169,07

Machos rosca cilíndrica BSP cono 60°

BSP Male-parallel 60° cone

Mâle BSP cône 60°

Maschio BSP cilindrico sede 60°

DN	ROSCA THREAD		Referencia Part n°	€
3/16"	1/8" BSP		841120203	21,76
1/4"	1/8" BSP		841120204	21,36
3/16"	1/4" BSP		841120403	21,52
1/4"	1/4" BSP		841120404	13,97
5/16"	1/4" BSP		841120405	23,68
3/8"	1/4" BSP		841120406	22,81
1/4"	3/8" BSP		841120604	25,16
5/16"	3/8" BSP		841120605	17,73
3/8"	3/8" BSP		841120606	14,02
1/2"	3/8" BSP		841120608	21,43
3/8"	1/2" BSP		841120806	20,95
1/2"	1/2" BSP		841120808	18,54
5/8"	5/8" BSP		841121010	37,39
5/8"	3/4" BSP		841121210	34,65
3/4"	3/4" BSP		841121212	28,08
3/4"	1" BSP		841121612	55,74
1"	1" BSP		841121616	53,41
1"	1"1/4 BSP		841122016	93,38
1"1/4	1"1/4 BSP		841122020	90,78
1"1/4	1"1/2 BSP		841122420	118,96
1"1/2	1"1/2 BSP		841122424	111,37
2"	1" 1/2 BSP	NEW	841122432	180,03
2"	2" BSP		841123232	179,53
2" 1/2	2" 1/2 BSP	NEW	841124040	372,63

Macho rosca cónica BSPT cono 60°

Male BSPT tapered

Mâle gaz conique BSPT 60°

Maschio BSPT conico

DN	ROSCA THREAD		Referencia Part n°	€
1/4"	1/4" BSPT		841140404	12,13
5/16"	1/4" BSPT		841140405	20,62
3/8"	1/4" BSPT		841140406	18,72
1/4"	3/8" BSPT		841140604	23,66
5/16"	3/8" BSPT		841140605	20,76
3/8"	3/8" BSPT		841140606	14,67
1/2"	3/8" BSPT		841140608	20,22
3/8"	1/2" BSPT		841140806	26,40
1/2"	1/2" BSPT		841140808	16,39
5/8"	1/2" BSPT		841140810	29,02
3/4"	1/2" BSPT	NEW	841140812	38,41
1/2"	3/4" BSPT		841141208	42,28
5/8"	3/4" BSPT		841141210	31,00
3/4"	3/4" BSPT		841141212	26,08
3/4"	1" BSPT		841141612	44,94
1"	1" BSPT		841141616	44,15
1"	1"1/4 BSPT		841142016	80,79
1"1/4	1"1/4 BSPT		841142020	81,28
1"1/4	1"1/2 BSPT		841142420	107,19
1"1/2	1"1/2 BSPT		841142424	100,30
2"	2" BSPT		841143232	168,19

CONEXIONES STANDARD

Standard series
Embouts série standard
Serie Standard

Hembras giratorias rectas rosca NPSM cono 60° doble hexagonal

Double hexagonal NPSM Swivel female cone 60°

Femelle NPSM cone 60° double hexagonal

Femmina diritta NPSM sede 60° doppio esagono

DN	ROSCA THREAD	Referencia Part n°	€
1/4"	1/4" 18h NPSM	843610404	27,33
3/8"	3/8" 18h NPSM	843610606	28,15
1/2"	1/2" 14h NPSM	843610808	31,13
3/4"	3/4" 14h NPSM	843611212	45,39
1"	1" - 11 1/2h NPSM	843611616	72,22

Hembras giratorias rectas rosca NPSM cono 60°

NPSM Swivel female 60° cone

Femelle NPSM cone 60°

Femmina diritta NPSM sede 60°

DN	ROSCA THREAD	Referencia Part n°	€
1/4"	1/4" 18h NPSM	842610404	14,38
3/8"	3/8" 18h NPSM	842610606	15,07
1/2"	1/2" 14h NPSM	842610808	20,16
3/4"	3/4" 14h NPSM	842611212	31,37
3/4"	1"-11 1/2h NPSM	842611612	53,10
1"	1"-11 1/2h NPSM	842611616	52,34
1"1/2	1"1/2-11 1/2h NPSM	842612424	101,09

Hembras giratorias 90° rosca NPSM cono 60°

NPSM Swivel female 60° cone (90° Elbow)

Coude 90° femelle NPSM cone 60°

Femmina 90° NPSM sede 60°

DN	ROSCA THREAD	Referencia Part n°	€
1/4"	1/4" 18h NPSM	842620404	24,59
3/8"	3/8" 18h NPSM	842620606	26,63
1/2"	1/2" 14h NPSM	842620808	34,50
3/4"	3/4" 14h NPSM	842621212	59,93
1"	1"-11 1/2h NPSM	842621616	82,81

Hembras giratorias 45° rosca NPSM cono 60°

NPSM Swivel female 60° cone (45° Elbow)

Coude 45° femelle NPSM cone 60°

Femmina 45° NPSM sede 60°

DN	ROSCA THREAD	Referencia Part n°	€
1/4"	1/4" 18h NPSM	842630404	24,59
3/8"	3/8" 18h NPSM	842630606	26,62
1/2"	1/2" 14h NPSM	842630808	34,50
3/4"	3/4" 14h NPSM	842631212	59,94
1"	1"-11 1/2h NPSM	842631616	82,81

Machos rosca cónica NPT

NPT Male pipe straight

Embout mâle conique NPT (BRIGGS)

Maschio NPT conico

DN	ROSCA THREAD		Referencia Part n°	€
1/4"	1/8" NPT		841610204	19,02
3/16"	1/4" NPT		841610403	17,97
1/4"	1/4" NPT		841610404	12,16
5/16"	1/4" NPT		841610405	20,94
3/8"	1/4" NPT		841610406	21,36
1/4"	3/8" NPT		841610604	20,89
5/16"	3/8" NPT		841610605	23,62
3/8"	3/8" NPT		841610606	12,81
1/2"	3/8" NPT		841610608	25,46
1/4	1/2 NPT		841610804	34,45
3/8"	1/2" NPT		841610806	27,83
1/2"	1/2" NPT		841610808	18,08
5/8"	1/2" NPT		841610810	25,56
1/2"	3/4" NPT		841611208	37,25
5/8"	3/4" NPT		841611210	33,33
3/4"	3/4" NPT		841611212	27,09
1"	3/4" NPT	NEW	841611216	44,07
3/4"	1" NPT		841611612	50,32
1"	1" NPT		841611616	44,58
1"	1"1/4 NPT		841612016	87,26
1"1/4	1"1/4 NPT		841612020	82,13
1"	1"1/2 NPT	NEW	841612416	119,79
1"1/4	1"1/2 NPT		841612420	98,89
1"1/2	1"1/2 NPT		841612424	95,51
2"	2" NPT		841613232	170,71

Machos giratorios NPT

Swivel male NPT

Mâle tournant NPT

Maschio girevole NPT

DN	ROSCA THREAD		Referencia Part n°	€
1/4"	1/4" NPT		841650404	46,47
3/8"	3/8" NPT		841650606	47,32
3/8"	1/2" NPT	NEW	841650806	70,28
1/2"	1/2" NPT		841650808	51,65
3/4"	1/2" NPT	NEW	841650812	85,30
1/2"	3/4" NPT	NEW	841651208	88,23
3/4"	3/4" NPT		841651212	73,85
3/4"	1" NPT		841651612	117,13
1"	1" NPT		841651616	109,39

CONEXIONES STANDARD

Standard series
Embouts série standard
Serie Standard

Hembras giratorias recta JIC 37° doble hexagonal

Double hexagonal JIC 37° Swivel female

Femelle JIC 37° double hexagonal

Femmina diritta JIC 37° doppio esagono

DN	ROSCA THREAD		Referencia Part n°	€
3/16"	7/16" 20h UNF		**842420703**	**17,66**
1/4"	7/16" 20h UNF		**842420704**	**15,89**
5/16"	7/16" 20h UNF		**842420705**	**26,54**
3/8"	7/16" 20h UNF	NEW	**842420706**	**31,46**
1/4"	1/2" 20h UNF		**842420804**	**21,46**
5/16"	1/2" 20h UNF		**842420805**	**27,31**
3/8"	1/2" 20h UNF		**842420806**	**24,70**
1/4"	9/16" 18h UNF		**842420904**	**24,45**
5/16"	9/16" 18h UNF		**842420905**	**26,99**
3/8"	9/16" 18h UNF		**842420906**	**17,49**
3/8"	3/4" 16h UNF		**842421206**	**23,55**
1/2"	3/4" 16h UNF		**842421208**	**19,21**
5/8"	3/4"16h UNF		**842421210**	**27,71**
3/4"	3/4" 16h UNF	NEW	**842421212**	**45,82**
1/2"	7/8" 14h UNF		**842421408**	**32,36**
5/8"	7/8" 14h UNF		**842421410**	**35,16**
3/4	7/8" 14h UNF		**842421412**	**37,97**
5/8"	1"1/16 12h UN		**842421710**	**39,52**
3/4"	1"1/16 12h UN		**842421712**	**34,40**
1"	1"1/16 12h UN		**842421716**	**57,62**
3/4"	1"5/16 12h UN		**842422112**	**54,05**
1"	1"5/16 12h UN		**842422116**	**52,89**
1"1/4	1"5/8 12h UN		**842422620**	**107,98**
1"1/2	1"7/8 12h UN		**842423024**	**141,27**
2"	2"1/2 12h UN		**842424032**	**270,87**

Hembras giratorias recta JIC 37°

JIC 37° Swivel female

Femelle droite JIC cone 37°

Femmina diritta JIC sede 37°

DN	ROSCA THREAD	Referencia Part n°	€
3.2 mm	7/16" 20h UNF	**841420701**	**17,12**
3/16"	7/16" 20h UNF	**841420703**	**13,62**
1/4"	7/16" 20h UNF	**841420704**	**11,46**
3/16"	1/2" 20h UNF	**841420803**	**15,71**
1/4"	1/2" 20h UNF	**841420804**	**12,69**
5/16"	1/2" 20h UNF	**841420805**	**14,09**
1/4"	9/16" 18h UNF	**841420904**	**14,17**
5/16"	9/16" 18h UNF	**841420905**	**13,08**
3/8"	9/16" 18h UNF	**841420906**	**13,46**
3/8"	3/4" 16h UNF	**841421206**	**16,43**
1/2"	3/4" 16h UNF	**841421208**	**16,76**
3/8"	7/8" 14h UNF	**841421406**	**22,00**
1/2"	7/8" 14h UNF	**841421408**	**18,64**
5/8"	7/8" 14h UNF	**841421410**	**22,37**
1/2"	1"1/16 12h UN	**841421708**	**37,81**
5/8"	1"1/16 12h UN	**841421710**	**30,09**
3/4"	1"1/16 12h UN	**841421712**	**24,89**
1"	1"1/16 12h UN	**841421716**	**40,34**
3/4"	1"5/16 12h UN	**841422112**	**39,02**
1"	1"5/16 12h UN	**841422116**	**41,25**
1"	1"5/8 12h UN	**841422616**	**71,31**
1"1/4	1"5/8 12h UN	**841422620**	**75,29**
1" 1/4	1"7/8 12h UN	**841423020**	**135,47**
1"1/2	1"7/8 12h UN	**841423024**	**104,81**
2"	2"1/2 12h UN	**841424032**	**206,05**

Hembras giratorias 90° JIC 37°

JIC 37° Swivel female (90° Elbow)

Coude 90° femelle JIC cone 37°

Femmina 90° JIC sede 37°

DN	ROSCA THREAD	Referencia Part n°	€
3/16"	7/16" 20h UNF	**841380703**	**27,75**
1/4"	7/16" 20h UNF	**841380704**	**20,80**
1/4"	1/2" 20h UNF	**841380804**	**24,44**
5/16"	1/2" 20h UNF	**841380805**	**35,36**
1/4"	9/16" 18h UNF	**841380904**	**35,51**
5/16"	9/16" 18h UNF	**841380905**	**27,14**
3/8"	9/16" 18h UNF	**841380906**	**25,89**
3/8"	3/4" 16h UNF	**841381206**	**34,94**
1/2"	3/4" 16h UNF	**841381208**	**30,91**
3/8"	7/8" 14h UNF	**841381406**	**38,37**
1/2"	7/8" 14h UNF	**841381408**	**33,61**
5/8"	7/8" 14h UNF	**841381410**	**41,68**
5/8"	1"1/16 12h UN	**841381710**	**51,82**
3/4"	1"1/16 12h UN	**841381712**	**49,41**
3/4"	1" 5/16 12h UN	**841382112**	**77,90**
1"	1"5/16 12h UN	**841382116**	**75,94**
1"	1"5/8 12h UN	**841382616**	**157,54**
1"1/4	1"5/8 12h UN	**841382620**	**132,85**
1" 1/4	1" 7/8 12h UN	**841383020**	**216,64**
1"1/2	1"7/8 12h UN	**841383024**	**223,28**
2"	2"1/2 12h UN	**841384032**	**485,67**

CONEXIONES STANDARD

Standard series
Embouts série standard
Serie Standard

Hembras giratorias 45° JIC 37°

JIC 37° Swivel female (45° Elbow)

Coude 45° femelle JIC cone 37°

Femmina 45° JIC sede 37°

DN	ROSCA THREAD	Referencia Part n°	€
3/16"	7/16" 20h UNF	841390703	27,75
1/4"	7/16" 20h UNF	841390704	20,80
1/4"	1/2" 20h UNF	841390804	24,44
5/16"	1/2" 20h UNF	841390805	35,36
1/4"	9/16" 18h UNF	841390904	35,51
5/16"	9/16" 18h UNF	841390905	27,15
3/8"	9/16" 18h UNF	841390906	25,89
3/8"	3/4" 16h UNF	841391206	34,94
1/2"	3/4" 16h UNF	841391208	30,91
3/8"	7/8" 14h UNF	841391406	38,37
1/2"	7/8" 14h UNF	841391408	33,61
5/8"	7/8" 14h UNF	841391410	41,68
5/8"	1"1/16 12h UN	841391710	51,82
3/4"	1"1/16 12h UN	841391712	49,41
3/4"	1"5/16 12h UN	841392112	77,90
1"	1"5/16 12h UN	841392116	75,94
1"	1"5/8 12h UN	841392616	157,54
1"1/4	1"5/8 12h UN	841392620	132,85
1"1/4	1"7/8 12h UN	841393020	216,64
1"1/2	1"7/8 12h UN	841393024	223,28
2"	2"1/2 12h UN	841394032	485,67

Machos rosca JIC cono 37°

Male JIC 37°

Mâle fixe JIC cone 37°

Maschio JIC sede 37°

DN	ROSCA THREAD	Referencia Part n°	€
1/4"	7/16" 20h UNF	841400704	17,98
1/4"	1/2" 20h UNF	841400804	18,66
5/16"	1/2" 20h UNF	841400805	17,32
1/4"	9/16" 18h UNF	841400904	23,29
5/16"	9/16" 18h UNF	841400905	23,37
3/8"	9/16" 18h UNF	841400906	22,44
1/4"	3/4" 16h UNF	841401204	34,88
3/8"	3/4" 16h UNF	841401206	17,30
1/2"	3/4" 16h UNF	841401208	22,04
3/8"	7/8" 14h UNF	841401406	26,79
1/2"	7/8" 14h UNF	841401408	19,34
5/8"	7/8" 14h UNF	841401410	27,46
5/8"	1"1/16 12h UN	841401710	35,27
3/4"	1"1/16 12h UN	841401712	32,79
1"	1"1/16 12h UN	841401716	38,58
3/4"	1"5/16 12h UN	841402112	51,35
1"	1"5/16 12h UN	841402116	52,90
1"	1"5/8 12h UN	841402616	85,56
1"1/4	1"5/8 12h UN	841402620	85,20
1"1/2	1"7/8 12h UN	841403024	108,23
2"	2"1/2 12h UN	841404032	251,15

Machos rosca JIC cono 37° con junta

Male JIC 37° with o'ring

Mâle fixe JIC cone 37° avec o'ring

Maschio JIC sede 37° con o'ring

DN	ROSCA THREAD	Referencia Part n°	€
1/4"	7/16" 20h UNF	841410704	19,01
3/8"	9/16" 18h UNF	841410906	22,80
1/2"	3/4" 16h UNF	841411208	26,68
3/4"	1"1/16 12h UN	841411712	49,62
1"	1"5/16 12h UN	841412116	62,64
1"1/4	1"5/8 12h UN	841412620	121,71
1"1/2	1"7/8 12h UN	841413024	155,54
2"	2"1/2 12h UN	841414032	386,15

Hembras giratorias 90° compactas JIC 37°

JIC 37° Swivel female (90° Compact Elbow)

Coude femelle 90° compact JIC cone 37°

Femmina 90° JIC sede 37° compatta

DN	ROSCA THREAD	Referencia Part n°	€
1/4"	7/16" 20h UNF	841370704	55,67
3/8"	9/16" 18h UNF	841370906	57,70
1/2"	3/4" 16h UNF	841371208	64,93
3/4"	1"1/16 12h UNF	841371712	106,56
1"	1"5/16 12h UNF	841372116	145,88

CONEXIONES STANDARD

Standard series
Embouts série standard
Serie Standard

Hembras giratorias rectas rosca Métrica cono 24° con junta tórica - DKO

Metric female swivel with o'ring 24° cone

Femelle Métrique avec o'ring cône 24°

Femmina Metrica sede 24° con o'ring

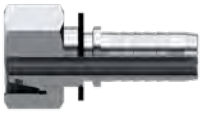

DN	TUBO PIPE	SERIE SERIES	ROSCA THREAD	Referencia Part n°	€
3/16"	6	L	M12x1.5	**84804120603**	**13,64**
1/4"	6	L	M12x1.5	**84804120604**	**11,89**
1/4"	8	L	M14x1.5	**84804140804**	**11,00**
5/16"	8	L	M14x1.5	**84804140805**	**17,08**
3/8"	8	L	M 14x1.5	**84804140806**	**21,77**
1/4"	10	L	M16x1.5	**84804161004**	**12,77**
5/16"	10	L	M16x1.5	**84804161005**	**12,28**
3/8"	10	L	M16x1.5	**84804161006**	**13,72**
1/4"	12	L	M18x1.5	**84804181204**	**19,70**
5/16"	12	L	M18x1.5	**84804181205**	**15,66**
3/8"	12	L	M18x1.5	**84804181206**	**12,87**
1/2"	12	L	M 18x1.5	**84804181208**	**29,70**
1/4"	15	L	M22x1.5	**84804221504**	**22,22**
5/16"	15	L	M22x1.5	**84804221505**	**21,65**
3/8"	15	L	M22x1.5	**84804221506**	**18,70**
1/2"	15	L	M22x1.5	**84804221508**	**17,95**
5/8"	15	L	M22x1,5	**84804221510**	**34,51**
3/8"	18	L	M26x1,5	**84804261806**	**30,62**
1/2"	18	L	M26x1.5	**84804261808**	**26,99**
5/8"	18	L	M26x1.5	**84804261810**	**24,77**
3/4"	18	L	M26x1.5	**84804261812**	**40,17**
1/2"	22	L	M30x2	**84804302208**	**36,14**
5/8"	22	L	M30x2	**84804302210**	**33,47**
3/4"	22	L	M30x2	**84804302212**	**30,28**
3/4"	28	L	M36x2	**84804362812**	**54,62**
1"	28	L	M36x2	**84804362816**	**50,19**
1"	35	L	M45x2	**84804453516**	**100,29**
1"1/4	35	L	M45x2	**84804453520**	**75,34**
1"1/4	42	L	M52x2	**84804524220**	**122,27**
1"1/2	42	L	M52x2	**84804524224**	**101,83**
2"	42	L	M52x2	**84804524232**	**190,00**
1/4"	6	S	M14x1.5	**84804140604**	**17,11**
1/4"	8	S	M16x1.5	**84804160804**	**13,83**
5/16"	8	S	M16x1.5	**84804160805**	**19,08**
3/8"	8	S	M16x1.5	**84804160806**	**18,92**
1/4"	10	S	M18x1.5	**84804181004**	**13,59**
5/16"	10	S	M18x1.5	**84804181005**	**20,53**
3/8"	10	S	M18x1.5	**84804181006**	**24,14**
5/16"	12	S	M20x1.5	**84804201205**	**17,66**
3/8"	12	S	M20x1.5	**84804201206**	**16,05**
1/2"	12	S	M20x1.5	**84804201208**	**22,30**
5/16"	14	S	M22x1.5	**84804221405**	**21,29**
3/8"	14	S	M22x1.5	**84804221406**	**20,68**
1/2"	14	S	M22X1.5 NEW	**84804221408**	**20,43**
1/4"	16	S	M24x1.5	**84804241604**	**26,90**
5/16"	16	S	M24x1.5	**84804241605**	**26,36**
3/8"	16	S	M24x1.5	**84804241606**	**24,41**
1/2"	16	S	M24x1.5	**84804241608**	**17,74**
5/8"	16	S	M24x1.5	**84804241610**	**31,55**
1/2"	20	S	M30x2	**84804302008**	**33,96**
5/8"	20	S	M30x2	**84804302010**	**27,83**
3/4"	20	S	M30x2	**84804302012**	**41,80**
5/8"	25	S	M36x2	**84804362510**	**53,49**
3/4"	25	S	M36x2	**84804362512**	**49,23**
1"	25	S	M36x2	**84804362516**	**61,75**
3/4"	30	S	M42x2	**84804423012**	**71,21**
1"	30	S	M42x2	**84804423016**	**70,76**
1"1/4	38	S	M52x2	**84804523820**	**108,78**

Machos rosca Métrica cono 24°

Metric Male stud 24° cone

Mâle métrique cône 24°

Maschio Metrico sede 24°

DN	TUBO PIPE	SERIE SERIES	ROSCA THREAD	Referencia Part n°	€
1/4"	6	L	M12x1.5	**84203120604**	**20,64**
1/4"	8	L	M14x1.5	**84203140804**	**14,34**
1/4"	10	L	M16x1.5	**84203161004**	**17,10**
5/16"	10	L	M16x1.5	**84203161005**	**21,05**
3/8"	10	L	M16x1.5	**84203161006**	**19,75**
1/4"	12	L	M18x1.5	**84203181204**	**21,25**
5/16"	12	L	M18x1.5	**84203181205**	**19,48**
3/8"	12	L	M18x1.5	**84203181206**	**11,73**
3/8"	15	L	M22x1.5	**84203221506**	**22,63**
1/2"	15	L	M22x1.5	**84203221508**	**17,98**
1/2"	18	L	M26x1.5	**84203261808**	**28,61**
5/8"	18	L	M26x1.5	**84203261810**	**26,93**
3/4"	22	L	M30x2	**84203302212**	**35,22**
1"	28	L	M36x2	**84203362816**	**51,53**
1"1/4	35	L	M45x2	**84203453520**	**79,13**
1"1/2	42	L	M52x2	**84203524224**	**126,61**
1/4"	6	S	M14x1.5	**84203140604**	**20,81**
1/4"	8	S	M16x1.5	**84203160804**	**19,97**
1/4"	10	S	M18x1.5	**84203181004**	**24,42**
5/16"	10	S	M18x1.5	**84203181005**	**30,60**
3/8"	10	S	M18x1.5	**84203181006**	**21,50**
5/16"	12	S	M20x1.5	**84203201205**	**23,69**
3/8"	12	S	M20x1.5	**84203201206**	**22,49**
3/8"	14	S	M22x1.5	**84203221406**	**27,31**
1/2"	14	S	M22x1.5	**84203221408**	**32,21**
1/2"	16	S	M24x1.5	**84203241608**	**20,98**
5/8"	20	S	M30x2	**84203302010**	**37,45**
3/4"	20	S	M30x2	**84203302012**	**38,90**
3/4"	25	S	M36x2	**84203362512**	**54,85**
1"	25	S	M36x2	**84203362516**	**69,88**
1"	30	S	M42x2	**84203423016**	**84,35**
1"1/4	38	S	M52x2	**84203523820**	**125,34**

Hembras giratorias rectas rosca Métrica cono 24° /60°

Metric female swivel 24° /60° cone

Femelle Métrique cône 24° /60°

Femmina Metrica sede 24° /60°

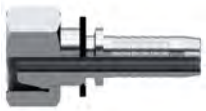

DN	TUBO PIPE	SERIE SERIES	ROSCA THREAD	Referencia Part n°	€
1/4"	8	L	M14x1.5	**84404140804**	**14,13**
1/4"	10	L	M16x1.5	**84404161004**	**17,88**
5/16"	10	L	M16x1.5	**84404161005**	**18,35**
3/8"	10	L	M16x1.5	**84404161006**	**18,28**
5/16"	12	L	M18x1.5	**84404181205**	**21,92**
3/8"	12	L	M18x1.5	**84404181206**	**17,21**
3/8"	15	L	M22x1.5	**84404221506**	**26,18**
1/2"	15	L	M22x1.5	**84404221508**	**25,90**
5/8"	18	L	M26x1.5	**84404261810**	**34,68**

CONEXIONES STANDARD

Standard series
Embouts série standard
Serie Standard

Hembras giratorias 90° Métricas cono 24° con junta tórica - DKO 90°

Metric swivel female with o'ring 24° cone (90° Elbow)

Coude 90° femelle Métrique cône 24° avec o'ring

Femmina Metrica 90° sede 24° con o'ring

DN	TUBO PIPE	ROSCA THREAD	SERIE SERIES	Referencia Part n°	€
3/16"	6	M12x1.5	L	**84305120603**	**27,47**
1/4"	6	M12x1.5	L	**84305120604**	**22,39**
1/4"	8	M14x1.5	L	**84305140804**	**21,31**
5/16"	8	M14x1.5	L	**84305140805**	**31,92**
1/4"	10	M16x1.5	L	**84305161004**	**24,98**
5/16"	10	M16x1.5	L	**84305161005**	**28,81**
3/8"	10	M16x1.5	L	**84305161006**	**27,47**
1/4"	12	M18x1.5	L	**84305181204**	**34,22**
5/16"	12	M18x1.5	L	**84305181205**	**33,31**
3/8"	12	M18x1.5	L	**84305181206**	**25,42**
1/2"	12	M18x1.5	L	**84305181208**	**39,04**
1/2"	15	M22x1.5	L	**84305221508**	**32,04**
5/8"	15	M22x1,5	L	**84305221510**	**68,58**
1/2"	18	M26x1.5	L	**84305261808**	**48,97**
5/8"	18	M26x1.5	L	**84305261810**	**46,01**
5/8"	22	M30x2	L	**84305302210**	**58,10**
3/4"	22	M30x2	L	**84305302212**	**54,91**
3/4"	28	M36x2	L	**84305362812**	**87,20**
1"	28	M36x2	L	**84305362816**	**85,92**
1" 1/4	35	M45x2	L	**84305453520**	**152,12**
1" 1/2	42	M52x2	L	**84305524224**	**225,65**
1/4"	6	M14x1.5	S	**84305140604**	**31,06**
1/4"	8	M16x1.5	S	**84305160804**	**25,89**
5/16"	8	M16x1.5	S	**84305160805**	**28,48**
1/4"	10	M18x1.5	S	**84305181004**	**26,29**
1/4"	12	M20x1.5	S	**84305201204**	**35,18**
5/16"	10	M18X1.5	S	**84305181005**	**38,79**
3/8"	10	M18x1.5	S	**84305181006**	**35,71**
5/16"	12	M20x1.5	S	**84305201205**	**37,09**
3/8"	12	M20x1.5	S	**84305201206**	**30,59**
1/2"	12	M20x1.5	S	**84305201208**	**33,35**
3/8"	14	M22x1.5	S	**84305221406**	**41,87**
1/2"	14	M22x1.5	S	NEW **84305221408**	**39,35**
3/8"	16	M24x1.5	S	**84305241606**	**36,70**
1/2"	16	M24x1.5	S	**84305241608**	**34,83**
3/8"	20	M30x2	S	**84305302006**	**70,66**
5/8"	20	M30x2	S	**84305302010**	**55,69**
3/4"	20	M30x2	S	**84305302012**	**58,23**
3/4"	25	M36x2	S	**84305362512**	**78,36**
1"	25	M36x2	S	**84305362516**	**96,68**
5/8"	30	M42x2	S	**84305423010**	**119,64**
3/4"	30	M42X2	S	**84305423012**	**168,98**
1"	30	M42x2	S	**84305423016**	**121,49**
1" 1/4	38	M52x2	S	**84305523820**	**203,91**

Hembras giratorias 45° Métricas cono 24° con junta tórica - DKO 45°

Metric swivel female with o'ring 24° cone (45° Elbow)

Coude 45° femelle Métrique cône 24° avec o'ring

Femmina Metrica 45° sede 24° con o'ring

DN	TUBO PIPE	SERIE SERIES	ROSCA THREAD	Referencia Part n°	€
3/16"	6	L	M12x1.5	**84306120603**	**27,48**
1/4"	6	L	M12x1.5	**84306120604**	**22,39**
1/4"	8	L	M14x1.5	**84306140804**	**21,31**
5/16"	8	L	M14x1.5	**84306140805**	**31,92**
1/4"	10	L	M16x1.5	**84306161004**	**24,98**
5/16"	10	L	M16x1.5	**84306161005**	**28,81**
3/8"	10	L	M16x1.5	**84306161006**	**27,47**
1/4"	12	L	M18x1.5	**84306181204**	**34,22**
5/16"	12	L	M18x1.5	**84306181205**	**33,31**
3/8"	12	L	M18x1.5	**84306181206**	**25,64**
1/2"	12	L	M18x1.5	**84306181208**	**39,04**
3/8"	15	L	M22x1.5	**84306221506**	**42,28**
1/2"	15	L	M22x1.5	**84306221508**	**32,04**
1/2"	18	L	M26X1.5	**84306261808**	**48,97**
5/8"	18	L	M26x1.5	**84306261810**	**46,01**
5/8"	22	L	M30x2	**84306302210**	**58,10**
3/4"	22	L	M30x2	**84306302212**	**54,91**
3/4"	28	L	M36x2	**84306362812**	**87,20**
1"	28	L	M36x2	**84306362816**	**85,92**
1" 1/4	35	L	M45x2	**84306453520**	**152,12**
1"1/2	42	L	M52x2	**84306524224**	**225,65**
1/4"	6	S	M14x1.5	**84306140604**	**31,06**
1/4"	8	S	M16x1.5	**84306160804**	**25,89**
5/16"	8	S	M16x1.5	**84306160805**	**28,48**
1/4"	10	S	M18x1.5	**84306181004**	**26,29**
3/8"	10	S	M18x1.5	**84306181006**	**35,71**
1/4"	12	S	M20x1.5	**84306201204**	**35,18**
5/16"	12	S	M20x1.5	**84306201205**	**37,09**
3/8"	12	S	M20x1.5	**84306201206**	**27,98**
1/2"	12	S	M20x1.5	**84306201208**	**33,35**
3/8"	14	S	M22x1.5	**84306221406**	**41,87**
3/8"	16	S	M24x1.5	**84306241606**	**36,70**
1/2"	16	S	M24x1.5	**84306241608**	**31,66**
3/8"	20	S	M30x2	**84306302006**	**70,66**
5/8"	20	S	M30x2	**84306302010**	**55,69**
3/4"	20	S	M30x2	**84306302012**	**58,23**
3/4"	25	S	M36x2	**84306362512**	**78,36**
1"	25	S	M36x2	**84306362516**	**96,68**
3/4"	30	S	M42x2	**84306423012**	**168,98**
1"	30	S	M42x2	**84306423016**	**121,49**
1"1/4	38	S	M52x2	**84306523820**	**203,91**

CONEXIONES STANDARD

Standard series
Embouts série standard
Serie Standard

Hembras giratorias rectas rosca Métrica 24° sin junta tórica NEW

Metric female swivel without o'ring 24° cone

Femelle Métrique cône 24° sans o'ring

Femmina Metrica sede 24° senza o'ring

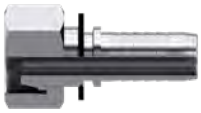

TUBO PIPE	SERIE SERIES	ROSCA THREAD	DN DN	Referencia Part n°	€
8	L	M14x1.5	1/4"	**84814140804**	**10,41**
10	L	M16x1.5	5/16"	**84814161005**	**19,98**
12	L	M18x1.5	3/8"	**84814181206**	**17,90**
15	L	M22x1.5	1/2"	**84814221508**	**18,49**
18	L	M26x1.5	5/8"	**84814261810**	**25,51**
22	L	M30x2	3/4"	**84814302212**	**31,19**

Hembras giratorias 45° Métricas 24° sin junta tórica NEW

Metric swivel female without o'ring 24° cone (45° Elbow)

Coude 45° femelle Métrique cône 24° sans o'ring

Femmina Metrica 45° sede 24° senza o'ring

DN	TUBO PIPE	SERIE SERIES	ROSCA THREAD	Referencia Part n°	€
1/4"	8	L	M14x1.5	**84316140804**	**21,94**
5/16"	10	L	M16x1.5	**84316161005**	**29,67**
3/8"	12	L	M18x1.5	**84316181206**	**26,18**
1/2"	15	L	M22x1.5	**84316221508**	**31,79**
5/8"	18	L	M26x1.5	**84316261810**	**47,39**
3/4"	22	L	M30x2	**84316302212**	**56,56**

Hembras giratorias 90° Métricas 24° sin junta tórica NEW

Metric swivel female without o'ring 24° cone (90° Elbow)

Coude 90° femelle Métrique cône 24° sans o'ring

Femmina Metrica 90° sede 24° senza o'ring

DN	TUBO PIPE	SERIE Serie	ROSCA THREAD	Referencia Part n°	€
1/4"	8	L	M14x1.5	**84315140804**	**21,94**
5/16"	10	L	M16x1.5	**84315161005**	**29,67**
3/8"	12	L	M18x1.5	**84315181206**	**26,18**
1/2"	15	L	M22x1.5	**84315221508**	**31,79**
5/8"	18	L	M26x1.5	**84315261810**	**47,39**
3/4"	22	L	M30x2	**84315302212**	**56,56**

- Sin junta tórica
- Especial mangueras PTFE
- Altas temperaturas
- Resistencia química

- Without o'ring
- PTFE Hose
- High temperature
- Chemist resistance

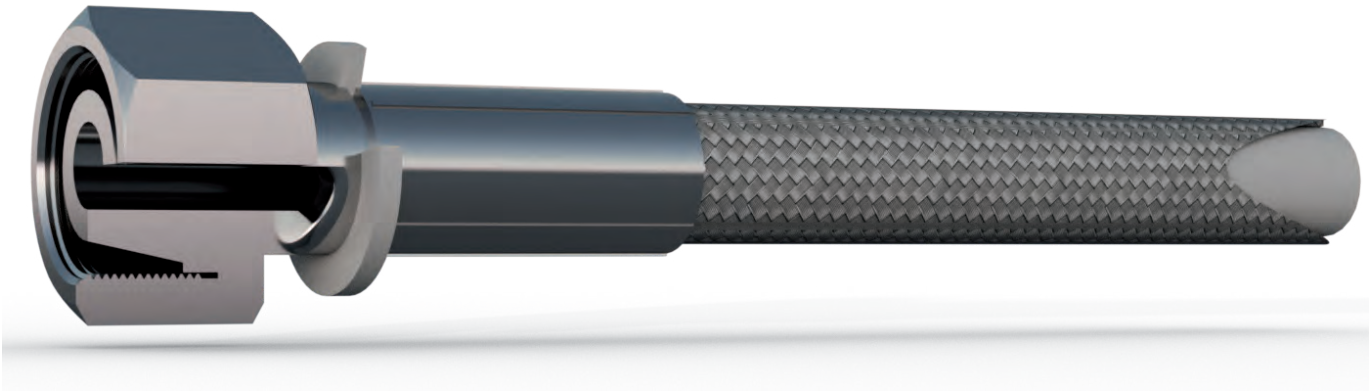

CONEXIONES STANDARD

Standard series
Embouts série standard
Serie Standard

Espigas lisas rectas Métricas

Metric standpipe for DIN 2353 fittings

Embout lisse droit Métrique

Estremitá tubolare per raccordi DIN 2353

DN	TUBO PIPE	Referencia Part n°	€
3.2 mm	6	841580601	10,29
1/8"	6	841580602	10,49
3/16"	6	841580603	9,80
1/4"	6	841580604	9,42
3/16"	8	841580803	9,34
1/4"	8	841580804	8,78
5/16"	8	841580805	10,92
3/8"	8	841580806	10,98
1/4"	10	841581004	9,32
5/16"	10	841581005	10,48
3/8"	10	841581006	9,46
1/4"	12	841581204	12,46
5/16"	12	841581205	12,37
3/8"	12	841581206	8,59
1/2"	12	841581208	12,16
3/8"	14	841581406	11,79
1/2"	14	841581408	17,24
3/8"	15	841581506	16,45
1/2"	15	841581508	12,98
1/2"	16	841581608	14,51
1/2"	18	841581808	19,44
5/8"	18	841581810	19,34
3/4"	18	841581812	27,45
1/2"	20	841582008	21,68
5/8"	20	841582010	22,12
3/4"	20	841582012	24,05
5/8"	22	841582210	22,92
3/4"	22	841582212	25,40
3/4"	25	841582512	29,59
1"	25	841582516	32,12
1"	28	841582816	30,60
1"	30	841583016	33,46
1"1/4	35	841583520	48,30
1"1/4	38	841583820	58,29
1"1/2	38	841583824	66,57
1"1/2	42	841584224	61,49

Espigas lisas rectas para tubo en pulgadas

Fractional Straight standpipe

Embout lisse tube pouce

Estremitá tubolare serie pollici

DN	TUBO PIPE		Referencia Part n°	€
1/4"	6.4		841590604	11,60
3/8"	9.5		841590906	14,31
3/8"	12.7		841591206	16,12
1/2"	12.7		841591208	15,37
5/8"	12.7	NEW	841591210	22,31
1/2"	15.8	NEW	841591508	17,92
5/8"	15.8		841591510	22,30
5/8"	19.05	NEW	841591910	32,14
3/4"	19.05		841591912	29,48
1"	25.4	NEW	841592516	33,94

Espigas lisas 90° Métricas

Metric standpipe DIN 2353 fittings (90° Elbow)

Embout lisse coude 90° Métrique

Estremitá tubolare 90° per raccordi DIN 2353

DN	TUBO PIPE	Referencia Part n°	€
1/8"	6	842580602	31,37
3/16"	6	842580603	26,99
1/4"	6	842580604	20,61
3/16"	8	842580803	25,65
1/4"	8	842580804	19,41
5/16"	8	842580805	22,53
1/4"	10	842581004	20,54
5/16"	10	842581005	24,08
3/8"	10	842581006	27,89
1/4"	12	842581204	25,48
5/16"	12	842581205	27,06
3/8"	12	842581206	21,11
1/2"	12	842581208	34,13
3/8"	14	842581406	29,94
1/2"	14	842581408	40,10
3/8"	15	842581506	36,30
1/2"	15	842581508	31,86
1/2"	16	842581608	38,07
1/2"	18	842581808	39,39
5/8"	18	842581810	42,21
5/8"	20	842582010	52,90
3/4"	20	842582012	57,13
5/8"	22	842582210	65,07
3/4"	22	842582212	49,15
3/4"	25	842582512	52,19
1"	28	842582816	80,16
1"	30	842583016	79,08

Espigas lisas 90° para tubo en pulgadas

Fractional standpipe (90° Elbow)

Embout lisse coude 90° tube pouce

Estremitá tubolare 90° serie pollici

DN	TUBO PIPE	Referencia Part n°	€
1/4"	6.4	842590604	32,48
3/8"	9.5	842590906	34,72
1/2"	12.7	842591208	43,29

CONEXIONES STANDARD

Standard series
Embouts série standard
Serie Standard

Espigas lisas 45° Métricas

Metric standpipe DIN 2353 fittings (45° Elbow)

Embout lisse coude 45° Métrique

Estremitá tubolare 45° per raccordi DIN 2353

DN	TUBO PIPE	Referencia Part n°	€
1/8"	6	843580602	31,37
3/16"	6	843580603	26,99
1/4"	6	843580604	20,61
3/16"	8	843580803	25,65
1/4"	8	843580804	19,40
5/16"	8	843580805*	22,53
1/4"	10	843581004	20,54
5/16"	10	843581005	24,08
3/8"	10	843581006	27,89
1/4"	12	843581204	25,48
5/16"	12	843581205	27,06
3/8"	12	843581206	21,11
1/2"	12	843581208	34,13
3/8"	14	843581406	29,88
1/2"	14	843581408	40,10
3/8"	15	843581506	36,30
1/2"	15	843581508	31,86
1/2"	16	843581608	38,07
1/2"	18	843581808	39,37
5/8"	18	843581810	42,21
5/8"	20	843582010	52,90
1/2"	20	843582012	57,13
5/8"	22	843582210	65,07
3/4"	22	843582212	49,15
3/4"	25	843582512	52,19
1"	28	843582816	80,16
1"	30	843583016	79,08

***Hasta fin de existencias** / *Until end of stock* / Jusqu´à la fin du stock / *Fino ad esaurimento*

Espigas de prensar dobles

Double crimp standpipe

Embout double jonction

Giunzione tubo-tubo

DN	Referencia Part n°	€
1/4"	843000404	25,33
5/16"	843000505	26,46
3/8"	843000606	25,12
1/2"	843000808	31,29
3/4"	843001212	58,17
1"	843001616	61,24
1"1/4	843002020	124,07
1" 1/2	843002424	140,05
2"	843003232	296,65

Espigas lisas 45° para tubo en pulgadas

Fractional Standpipe for inch tube (45° Elbow)

Embout lisse coude 45° tube pouce

Estremitá tubolare 45° serie pollici

DN	TUBO PIPE	Referencia Part n°	€
1/4"	6,4	843590604	32,48
3/8"	9,5	843590906	34,72
1/2"	12,7	843591208	43,29

Espigas soldables

Welding standpipes

Embout lisse à souder

Inserti a saldare

DN	Referencia Part n°	€
1/8"	840000200*	14,01
3/16"	840000300	18,43
1/4"	840000400	11,51
5/16"	840000500	16,21
3/8"	840000600	19,26
1/2"	840000800	16,97
5/8"	840001000	22,96
3/4"	840001200	23,85
1"	840001600	25,33
1"1/4	840002000	55,44
1"1/2	840002400	63,90
2"	840003200	98,91
2"1/2	840004000	186,35

***Hasta fin de existencias** / *Until end of stock* / Jusqu´à la fin du stock / *Fino ad esaurimento*

CONEXIONES STANDARD

Standard series
Embouts série standard
Serie Standard

Orientables BSP

Banjo BSP

Banjo droit gaz BSP

Raccordo ad occhio BSP

DN	Ø	Referencia Part n°	€
1/4"	1/4"	841110404	34,10
1/4"	3/8"	841110604	48,66
5/16"	3/8"	841110605	44,96
3/8"	3/8"	841110606	38,76
1/2"	3/8"	841110608	61,46
3/8"	1/2"	841110806	66,95
1/2"	1/2"	841110808	59,34
3/4"	3/4"	841111212	91,59
1"	1"	841111616	203,82

Tornillo orientable simple BSP

BSP Bolt for banjo

Vis creuse simple pour banjo gaz

Bullone forato BSP

ROSCA THREAD		Referencia Part n°	€
1/8" BSP	NEW	Z109002	*
1/4" BSP		Z109004	*
3/8" BSP		Z109006	*
1/2" BSP		Z109008	*
3/4" BSP		Z109012	*
1" BSP		Z109016	*

***Ver precios en p.180 (ADAPTADORES BSP)** / **See prices in p.180 (BSP ADAPTORS)* / *Prix à la p.180 (ADAPTEURS BSP) / **Vedere prezzi p.180 (ADATTATORI BSP)*

Espigas para Hidrolavadoras

Standpipes for hidrowashing machines

Embouts lisses pour hydronettoyages

Inserti per idropulitrici

TUBO PIPE	ROSCA THREAD	Referencia Part n°	€
5/16"	M 22x1.5	8305005	20,39
3/8"	M 22x1.5	8305006	21,51

Orientables Métricos

Banjo Metric

Banjo droit Métrique

Raccordo ad occhio Metrico

DN	Ø		Referencia Part n°	€
3/16"	M10x1	NEW	841161003	42,61
1/4"	M10x1		841161004	40,39
3/8"	M14x1.5		841161406	44,78
1/4"	M12x1.5		841161204	43,06
5/16"	M16x1.5		841161605	53,13
1/4"	M14x1.5		841161404	39,31
3/8"	M16x1.5		841161606	48,17
3/8"	M18x1.5		841161806	57,61
1/2"	M18x1.5		841161808	68,24
1/2"	M20x1.5		841162008	71,35
1/2"	M22x1.5		841162208	71,35
3/4"	M26x1.5		841162612	89,63

Tornillo orientable simple Métrico

Metric bolt for banjo

Vis creuse simple for banjo Métrique

Bullone forato Metrico

ROSCA THREAD	Referencia Part n°	€
M12X1.5	Z109212	*
M14X1.5	Z109214	*
M16X1.5	Z109216	*
M18X1.5	Z109218	*
M22X1.5	Z109222	*
M26X1.5	Z109226	*
M30X2	Z109230	*

***Ver precios en p.180 (ADAPTADORES BSP)** / **See prices in p.180 (BSP ADAPTORS)* / *Prix à la p.180 (ADAPTEURS BSP) / **Vedere prezzi p.180 (ADATTATORI BSP)*

Tuercas para terminales hidrolavadoras inox

Hexagonal nuts for hydrowashing machines

Écrous pour hidronettoyages

Dado per idropulitrici

ROSCA THREAD	Referencia Part n°	€
M22x1.5	KZTHAP22	14,71

***Consultar** / On request / **Sur demande** / Su richiesta

CONEXIONES STANDARD

Standard series
Embouts série standard
Serie Standard

Bridas rectas SAE 3000 PSI

3000 PSI SAE Straight Flange / Code 61

Bride SAE droite série 3000 PSI

Flangia diritta SAE 3000

DN	Ø		Referencia Part n°	€
1/2"	30,2		841820808	41,66
1/2"	38,1		841821208	69,57
5/8"	38,1		841821210	59,97
3/4"	38,1		841821212	55,42
3/4"	44,5		841821612	85,90
1"	44,5		841821616	68,28
1"	50,8		841822016	102,11
1"1/4	50,8		841822020	92,61
1"1/4	60,3		841822420	147,48
1"1/2	60,3		841822424	124,64
1"1/2	71,4		841823224	237,48
2"	71,4		841823232	210,78
2" 1/2	84,1	NEW	841824040	417,35
3"	101,6	NEW	841824848	615,84

Bridas 90° SAE 3000 PSI

3000 PSI SAE Flange (90° Elbow) / Code 61

Bride SAE coude 90° série 3000 PSI

Flangia 90° SAE 3000

DN	Ø	Referencia Part n°	€
1/2"	30,2	841830808	61,88
1/2"	38,1	841831208	80,79
5/8"	38,1	841831210	94,55
3/4"	38,1	841831212	84,99
3/4"	44,5	841831612	124,28
1"	44,5	841831616	109,55
1"	50,8	841832016	176,84
1"1/4	50,8	841832020	163,38
1"1/4	60,3	841832420	259,95
1"1/2	60,3	841832424	232,56
1"1/2	71,4	841833224	391,20
2"	71,4	841833232	349,54

Bridas 45° SAE 3000 PSI

3000 PSI SAE Flange (45° Elbow) / Code 61

Bride SAE coude 45° série 3000 PSI

Flangia 45° SAE 3000

DN	Ø	Referencia Part n°	€
1/2"	30.2	841840808	61,88
1/2"	38.1	841841208	80,79
5/8"	38.1	841841210	94,55
3/4"	38.1	841841212	84,99
3/4"	44.5	841841612	124,28
1"	44.5	841841616	109,55
1"	50.8	841842016	176,84
1"1/4	50.8	841842020	163,38
1"1/4	60.3	841842420	259,95
1"1/2	60.3	841842424	232,56
1"1/2	71.4	841843224	391,20
2"	71.4	841843232	349,54

Bridas rectas SAE 6000 PSI

6000 PSI SAE Straight Flange / Code 62

Bride SAE droite série 6000 PSI

Flangia diritta SAE 6000

DN	Ø	Referencia Part n°	€
1/2"	31,8	842820808	48,99
1/2"	41,3	842821208	78,40
5/8"	41,3	842821210	84,21
3/4"	41,3	842821212	66,96
3/4"	47,6	842821612	92,80
1"	47,6	842821616	85,12
1"	54	842822016	128,08
1"1/4	54	842822020	117,83
1"1/4	63,5	842822420	185,37
1"1/2	63,5	842822424	159,50
1"1/2	79,4	842823224	285,71
2"	79,4	842823232	279,33

Bridas 90° SAE 6000 PSI

6000 PSI SAE Flange (90° Elbow) / Code 62

Bride SAE coude 90° série 6000 PSI

Flangia 90° SAE 6000

DN	Ø	Referencia Part n°	€
1/2"	31,8	842830808	62,10
1/2"	41,3	842831208	97,92
5/8"	41,3	842831210	106,41
3/4"	41,3	842831212	91,75
3/4"	47,6	842831612	126,21
1"	47,6	842831616	132,96
1"	54	842832016	181,44
1"1/4	54	842832020	172,39
1"1/4	63,5	842832420	284,50
1"1/2	63,5	842832424	306,80
1"1/2	79,4	842833224	405,14
2"	79,4	842833232	372,61

Bridas 45° SAE 6000 PSI

6000 PSI SAE Flange (45° Elbow) / Code 62

Bride SAE coude 45° série 6000 PSI

Flangia 45° SAE 6000

DN	Ø	Referencia Part n°	€
1/2"	31.8	842840808	62,10
1/2"	41.3	842841208	97,92
5/8"	41.3	842841210	106,41
3/4"	41.3	842841212	91,83
3/4"	47.6	842841612	126,21
1"	47.6	842841616	132,96
1"	54	842842016	181,44
1"1/4	54	842842020	172,39
1"1/4	63.5	842842420	284,58
1"1/2	63.5	842842424	306,01
1"1/2	79.4	842843224	405,14
2"	79.4	842843232	372,61

CONEXIONES STANDARD

Standard series
Embouts série standard
Serie Standard

Brida partida pasante

SAE Split flange

Demi-bride de fixation

Semiflangia SAE

SERIE SERIES	Ø INT. Ø INNER	TAMAÑO SIZE		Referencia Part n°	€
3000 PSI	30.2	1/2"		ZBBP308302	13,86
3000 PSI	38.1	3/4"		ZBBP312381	17,89
3000 PSI	44.5	1"		ZBBP316445	21,30
3000 PSI	50.8	1"1/4		ZBBP320508	30,74
3000 PSI	60.3	1"1/2		ZBBP324603	40,38
3000 PSI	71.4	2"		ZBBP332714	48,78
3000 PSI	84.1	2" 1/2	NEW	ZBBP340841	98,57
3000 PSI	102.4	3"		ZBBP3481024	106,02
3000 PSI	127	4"	NEW	ZBBP364127	201,88
6000 PSI	31.8	1/2"		ZBBP608318	18,32
6000 PSI	41.3	3/4"		ZBBP612413	26,79
6000 PSI	47.6	1"		ZBBP616476	40,88
6000 PSI	54	1"1/4		ZBBP620540	55,66
6000 PSI	63.5	1"1/2		ZBBP624635	86,01
6000 PSI	79.4	2"		ZBBP632794	149,34

Brida entera pasante

SAE Flange

Bride de fixation monobloc

Flangia monoblocco SAE

SERIE SERIES	Ø INT. Ø INNER	TAMAÑO SIZE		Referencia Part n°	€
3000 PSI	30.2	1/2"		ZBBE308302	14,42
3000 PSI	38.1	3/4"		ZBBE312381	18,60
3000 PSI	44.5	1"		ZBBE316445	21,30
3000 PSI	50.8	1"1/4		ZBBE320508	31,97
3000 PSI	60.3	1"1/2		ZBBE324603	42,00
3000 PSI	71.4	2"		ZBBE332714	49,73
3000 PSI	41	2" 1/2	NEW	ZBBE340841	97,59
3000 PSI	102.4	3"	NEW	ZBBE3481024	139,26
3000 PSI	127	4"	NEW	ZBBE364127	199,87
6000 PSI	31.8	1/2"		ZBBE608318	17,62
6000 PSI	41.3	3/4"		ZBBE612413	26,79
6000 PSI	47.6	1"		ZBBE616476	39,31
6000 PSI	54	1"1/4		ZBBE620540	57,89
6000 PSI	63.5	1"1/2		ZBBE624635	87,70
6000 PSI	79.4	2"		ZBBE632794	149,34

Tornillos para bridas SAE

Screws for SAE flanges

Vis pour brides SAE

Vite per flangia SAE

ROSCA THREAD	TAMAÑO SIZE	Referencia Part n°	€
M8X30	3000-6000 PSI 1/2"	ZTB8X30	*
M10X35	3000 PSI 3/4"-1"	ZTB10X35	*
M10X40	3000 PSI 1" 1/4 - 6000 PSI 3/4"	ZTB10X40	*
M12X45	3000 PSI 1"1/2-2"-2"1/2-6000 PSI 1"	ZTB12X45	*
M14X45	6000 PSI 1"1/4	ZTB14X45	*
M16X50	3000 PSI 3"-3"1/2"-4"- 6000 PSI 1" 1/2	ZTB16X50	*
M20X70	6000 PSI 2"	ZTB20X70	*

***Ver precios en p.160** / **See prices p.160* / *Voir prix p.160 / **Vedere prezzi p. 160*

Contrabrida roscada

SAE counter-flange

Contre-bride passage total

Controflangia SAE

SERIE SERIES	Ø INT. Ø INNER	TAMAÑO SIZE	Referencia Part n°	€
3000 PSI	30,2	1/2"	ZBCE308302	*
3000 PSI	38,1	3/4"	ZBCE312381	*
3000 PSI	44,5	1"	ZBCE316445	*
3000 PSI	50,8	1"1/4	ZBCE320508	*
3000 PSI	60,3	1"1/2	ZBCE324603	*
3000 PSI	71,4	2"	ZBCE332714	*
6000 PSI	31,8	1/2"	ZBCE608318	*
6000 PSI	41,3	3/4"	ZBCE612413	*
6000 PSI	47,6	1"	ZBCE616476	*
6000 PSI	54	1"1/4	ZBCE620540	*
6000 PSI	63,5	1"1/2	ZBCE624635	*
6000 PSI	79,4	2"	ZBCE632794	*

Juntas para bridas SAE 3000/6000 PSI

Seals for 3000/6000 PSI flange

Joints pour bride série 3000/6000

Guarnizioni per flangia SAE 3000/6000 PSI

TAMAÑO SIZE	Ø INT. Ø INNER	Ø EXT. Ø OUTER	Referencia Part n°	€
1/2"	17.02	25.40	JBR08	*
3/4"	23.36	31.72	JBR12	*
1"	31.24	39.62	JBR16	*
1"1/4	36.07	44.45	JBR20	*
1"1/2	45.34	53.98	JBR24	*
2"	54.86	63.50	JBR32	*

***Ver precios en Conducciones Hidráulicas y Neumáticas** / **See prices in Hydraulic and Pneumatic Connectors' Catalogue* / *Voir prix dans le Catalogue Connectique Hydraulique et Pneumatique / **Vedere prezzi nel listino Condutture Idrauliche e Pneumatiche*

Juntas tóricas para bridas SAE 3000/6000 PSI

O´rings for 3000/6000 PSI flange

O´rings pour bride série 3000/6000 PSI

O´rings per flangia SAE 3000/6000 PSI

TAMAÑO SIZE	Ø INT. Ø INNER	Referencia Part n°	€
1/2"	18.64	18.64X3.53	*
3/4"	24.99	24.99X3.53	*
1"	32.92	32.92X3.53	*
1"1/4	37.70	37.70X3.53	*
1"1/2	47.22	47.22X3.53	*
2"	56.74	56.74X3.53	*

***Ver precios en Conducciones Hidráulicas y Neumáticas** / **See prices in Hydraulic and Pneumatic Connectors' Catalogue* / *Voir prix dans le Catalogue Connectique Hydraulique et Pneumatique / **Vedere prezzi nel listino Condutture Idrauliche e Pneumatiche*

***Consultar** / On request / **Sur demande** / Su richiesta

CONEXIONES STANDARD

Standard series
Embouts série standard
Serie Standard

Hembras giratorias rectas ORFS doble hexagonal

Double hexagonal ORFS Swivel female straight

Femelle droite ORFS double hexagonal

Femmina diritta ORFS doppio esagono

DN	ROSCA THREAD		Referencia Part n°	€
1/4"	9/16"-18h		849010904	30,61
1/4"	11/16"-16h		849011104	41,93
5/16"	11/16"-16h		849011105	39,18
3/8"	11/16"-16h		849011106	34,18
3/8"	13/16"-16h		849011306	43,85
1/2"	13/16"-16h		849011308	38,73
1/2"	1"-14h		849011608	76,59
5/8"	1"-14h		849011610	59,09
1/2"	1"3/16-12h		849011908	88,92
5/8"	1"3/16-12h	NEW	849011910	82,75
3/4"	1"3/16-12h		849011912	62,05
3/4"	1"7/16-12h		849012312	99,29
1"	1"7/16-12h		849012316	85,96
1"1/4	1" 11/16-12h		849012720	163,04
1"1/2	2"-12h		849013224	189,71
2"	2"-12h	NEW	849013232	338,23

Machos ORFS

ORFS Male

Mâle ORFS

Maschio ORFS

DN	ROSCA THREAD	Referencia Part n°	€
1/4"	9/16"-18h	849120904	37,03
5/16"	11/16"-16h	849121105	32,24
3/8"	11/16"-16h	849121106	35,03
1/2"	13/16"-16h	849121308	43,80
5/8"	1"-14h	849121610	64,58
3/4"	1"3/16-12h	849121912	80,61
1"	1"7/16-12h	849122316	110,57
1"1/4	1" 11/16-12h	849122720	152,94
1"1/2	2"-12h	849123224	227,34

Hembras giratorias 90° ORFS

ORFS Swivel female (90° Elbow)

Coude 90° femelle ORFS

Femmina 90° ORFS

DN	ROSCA THREAD	Referencia Part n°	€
1/4"	9/16"-18h	849070904	57,70
1/4"	11/16"-16h	849071104	73,04
5/16"	11/16"-16h	849071105	71,39
3/8"	11/16"-16h	849071106	69,18
3/8"	13/16"-16h	849071306	76,49
1/2"	13/16"-16h	849071308	80,25
1/2"	1"-14h	849071608	115,10
5/8"	1"-14h	849071610	101,85
3/4"	1"3/16-12h	849071912	128,15
3/4"	1"7/16-12h	849072312	190,96
1"	1"7/16-12h	849072316	186,06
1"1/4	1" 11/16-12h	849072720	261,42
1"1/2	2"-12h	849073224	752,35

Hembras giratorias 45° ORFS

ORFS Swivel female (45° Elbow)

Coude 45° femelle ORFS

Femmina 45° ORFS

DN	ROSCA THREAD	Referencia Part n°	€
1/4"	9/16"-18h	849080904	57,70
1/4"	11/16"-16h	849081104	73,04
5/16"	11/16"-16h	849081105	71,39
3/8"	11/16"-16h	849081106	69,18
3/8"	13/16"-16h	849081306	76,49
1/2"	13/16"-16h	849081308	80,26
1/2"	1"-14h	849081608	115,10
5/8"	1"-14h	849081610	101,85
3/4"	1"3/16-12h	849081912	128,15
3/4"	1"7/16-12h	849082312	190,96
1"	1"7/16-12h	849082316	186,05
1"1/4	1" 11/16-12h	849082720	261,42
1"1/2	2"-12h	849083224	752,35

Macho O'Ring Boss

O'Ring Boss Male

Mâle O'Ring Boss

Maschio O'Ring Boss

DN	ROSCA THREAD	Referencia Part n°	€
1/4"	7/16"-20h UNF	847120604	27,76
3/8"	9/16"-18h UNF	847121006	17,80
1/2"	3/4"-16h UNF	847121208	20,61
5/8"	7/8"-14h UNF	847121610	25,64
3/4"	1"1/16-12h UN	847122012	51,41
1"	1"5/16-12h UN	847122516	86,09

CONEXIONES SERIE BW R12/4SP/4SH NO PELAR

Fittings BW Series R12/4SP/4SH No Skive
Embouts R12/4SP/4SH Série BW Sans dénuder
Raccordi R12/4SP/4SH Serie BW senza spellatura

Casquillos R12/4SP/4SH para conexiones serie BW

Ferrules R12/4SP/4SH for fittings BW series

Jupes R12/4SP/4SH pour embouts série BW

Boccole pressare per R12/4SP/4SH per raccordi serie BW

DN	Referencia Part n°	€
1/2"	ZAC680100800	26,11
5/8"	ZAC680101000	28,67
3/4"	ZAC680101200	36,60
1"	ZAC680101600	47,04
1"1/4	ZAC680102000	72,77
1"1/2	ZAC680102400	106,05
2"	ZAC680103200	158,78

Hasta fin de existencias / *Until end of stock* / Jusqu´à la fin du stock / *Fino ad esaurimento*

Casquillos R13/R15 para serie BW/BW+

NEW

Ferrules R13/R15 for fittings BW/BW+ series

Jupes R13/R15 pour embouts série BW/BW+

Boccole a pressare per R13/R15 per raccordi serie BW/BW+

DN	Part n° Referencia	€
1"1/4	ZAC690102000	88,23
1"1/2	ZAC690102400	110,31
2"	ZAC690103200	162,24

Hembras giratorias 90° BSP cono 60° con junta

BSP Swivel female 60° cone with o'ring (90° Elbow)

Coude 90° femelle tournante gaz cyl BSP 60° avec joint

Femmina a 90° BSP sede 60° con o'ring

DN	ROSCA THREAD	Referencia Part n°	€
1/2"	1/2" BSP	Z661170808*	49,92
3/4"	3/4" BSP	Z661171212*	58,95
1"	1" BSP	Z661171616*	85,08
1"1/4	1"1/4 BSP	Z661172020	145,75

*Hasta fin de existencias / *Until end of stock* / Jusqu´à la fin du stock / *Fino ad esaurimento*

Machos cilíndricos BSP 60°

BSP Male 60° cone

Mâle gaz cylindrique BSP 60°

Maschio BSP cilindrico sede 60°

DN	ROSCA THREAD	Referencia Part n°	€
1/2"	1/2" BSP	Z661120808*	27,44
3/4"	3/4" BSP	Z661121212*	41,09
1"	1" BSP	Z661121616*	55,74
1"1/4	1"1/4 BSP	Z661122020	101,02
2"	2" BSP	Z661123232	266,54

*Hasta fin de existencias / *Until end of stock* / Jusqu´à la fin du stock / *Fino ad esaurimento*

Hembras giratorias rectas BSP cono 60° doble hexagonal con junta

BSP Swivel female 60° cone double hexagonal with o'ring

Femelle tournante gaz cyl BSP 60° double hexagonale avec o'ring

Femmina diritta BSP sede 60° doppia esagono con o'ring

DN	ROSCA THREAD	Referencia Part n°	€
1/2"	1/2" BSP	Z664100808*	38,16
5/8"	5/8" BSP	Z664101210*	61,75
3/4"	3/4" BSP	Z664101212*	56,67
1"	1" BSP	Z664101616*	91,68
1"1/4	1"1/4 BSP	Z664102020	187,99
1"1/2	1"1/2 BSP	Z664102424	249,76
2"	2" BSP	Z664103232	509,57

*Hasta fin de existencias / *Until end of stock* / Jusqu´à la fin du stock / *Fino ad esaurimento*

Hembras giratorias 45° BSP cono 60° con junta

BSP Swivel female 60° cone with o'ring (45° Elbow)

Hembras giratorias 45° BSP cono 60° avec o'ring

Femmina a 45° BSP sede 60° con o'ring

DN	ROSCA THREAD	Referencia Part n°	€
1/2"	1/2" BSP	Z661180808*	49,92
3/4"	3/4" BSP	Z661181212*	58,95
1"	1" BSP	Z661181616*	85,08
1"1/4	1"1/4 BSP	Z661182020	145,75

*Hasta fin de existencias / *Until end of stock* / Jusqu´à la fin du stock / *Fino ad esaurimento*

CONEXIONES SERIE BW R12/4SP/4SH NO PELAR

Fittings BW Series R12/4SP/4SH No Skive
Embouts R12/4SP/4SH Série BW Sans dénuder
Raccordi R12/4SP/4SH Serie BW senza spellatura

Hembras giratorias rectas NPSM cono 60° doble hexagonal con junta

Double hexagonal NPSM female 60° cone with o'ring
Femelle NPSM cone 60° double hexagonal avec joint torique
Femmina diritta NPSM sede 60° doppio esagono con o'ring

DN	ROSCA THREAD	Referencia Part n°	€
3/4"	3/4" NPSM	Z664611212*	59,50
1"	1" NPSM	Z664611616*	96,26
1"1/4	1"1/4 NPSM	Z664612020	197,39
1"1/2	1"1/2 NPSM	Z664612424	262,25
2"	2" NPSM	Z664613232	430,71

*Hasta fin de existencias / *Until end of stock* / Jusqu´à la fin du stock / *Fino ad esaurimento*

Machos cónicos NPT

NPT Male pipe straight
Mâle conique NPT
Maschio conico NPT

DN	ROSCA THREAD	Referencia Part n°	€
1/2"	1/2" NPT	Z661610808*	28,16
3/4"	3/4" NPT	Z661611212*	37,59
1"	1" NPT	Z661611616*	53,05
1"1/4	1"1/4 NPT	Z661612020	94,17
1"1/2	1"1/2 NPT	Z661612424	135,79

*Hasta fin de existencias / *Until end of stock* / Jusqu´à la fin du stock / *Fino ad esaurimento*

Hembras giratorias rectas JIC 37° doble hexagonal

Double Hexagonal JIC 37° Swivel female
Femelle JIC 37° double hexagonal
Femmina diritta JIC 37° doppio esagono

DN	ROSCA THREAD	Referencia Part n°	€
1/2"	3/4" 16h UNF	Z662421208*	30,27
5/8"	7/8" 14h UNF	Z662421410*	43,90
3/4"	1"1/16 12h UN	Z662421712*	56,64
1"	1"1/16 12h UNF	Z662421716*	69,18
1"	1"5/16 12h UN	Z662422116*	86,64
1"1/4	1"5/8 12h UN	Z662422620	208,00
1"1/2	1"7/8 12h UN	Z662423024	312,53
2"	2"1/2 12h UN	Z662424032	464,91

*Hasta fin de existencias / *Until end of stock* / Jusqu´à la fin du stock / *Fino ad esaurimento*

Hembras giratorias 90° JIC 37°

JIC 37° Swivel female (90° Elbow)
Coude 90° femelle JIC 37°
Femmina gir. 90° JIC 37°

DN	ROSCA THREAD	Referencia Part n°	€
1/2"	3/4" 16h UNF	Z661381208*	37,20
5/8"	7/8" 14h UNF	Z661381410*	48,14
3/4"	1"1/16 12h UN	Z661381712*	59,52
1"	1"1/16 12h UNF	Z661381716*	102,24
1"	1"5/16 12h UN	Z661382116*	85,30
1"1/4	1"5/8 12h UN	Z661382620	131,78
1"1/2	1"7/8 12h UN	Z661383024	188,90
2"	2"1/2 12h UN	Z661384032	385,29

*Hasta fin de existencias / *Until end of stock* / Jusqu´à la fin du stock / *Fino ad esaurimento*

Hembras giratorias 45° JIC 37°

JIC 37° Swivel female (45° Elbow)
Coude 45° femelle JIC 37°
Femmina gir. 45° JIC 37°

DN	ROSCA THREAD	Referencia Part n°	€
1/2"	3/4" 16h UNF	Z661391208*	37,21
5/8"	7/8" 14h UNF	Z661391410 *	48,14
3/4"	1"1/16 12h UN	Z661391712*	59,52
1"	1"5/16 12h UN	Z661392116*	85,30
1"1/4	1"5/8 12h UN	Z661392620	131,78
1"1/2	1"7/8 12h UN	Z661393024	188,90
2"	2"1/2 12h UN	Z661394032	385,29

*Hasta fin de existencias / *Until end of stock* / Jusqu´à la fin du stock / *Fino ad esaurimento*

Machos JIC 37° con junta

JIC 37° male with o'ring
Mâle JIC 37° avec joint torique
Maschio JIC 37° con o'ring

DN	ROSCA THREAD	Referencia Part n°	€
1/2"	3/4" 16h UNF	Z661411208*	32,07
5/8"	7/8" 14h UNF	Z661411410*	37,99
3/4"	1"1/16 12h UNF	Z661411712*	49,73
1"	1"5/16 12h UNF	Z661412116*	67,47
1"1/4	1"5/8 12h UNF	Z661412620	102,55

*Hasta fin de existencias / *Until end of stock* / Jusqu´à la fin du stock / *Fino ad esaurimento*

CONEXIONES SERIE BW R12/4SP/4SH NO PELAR

Fittings BW Series R12/4SP/4SH No Skive
Embouts R12/4SP/4SH Série BW Sans dénuder
Raccordi R12/4SP/4SH Serie BW senza spellatura

Hembras giratorias rectas ORFS doble hexagonal

ORFS Swivel female straight

Femelle droite ORFS

Femmina diritta ORFS

DN	ROSCA THREAD	Referencia Part n°	€
1/2"	13/16"-16h	Z669011308*	50,96
3/4"	1"3/16-12h	Z669011912*	77,56
1"	1"7/16-12h	Z669012316*	113,88
1" 1/4	1"11/16-12h	Z669012720	149,11
1" 1/2	2"-12h	Z669013224	213,47

*Hasta fin de existencias / *Until end of stock* / Jusqu´à la fin du stock / *Fino ad esaurimento*

Hembras giratorias 90° ORFS asiento plano

ORFS Swivel female (90° Elbow)

Coude 90° femelle ORFS

Femmina 90° ORFS

DN	ROSCA THREAD	Referencia Part n°	€
1"	13/16"-16h	Z669071308*	96,46
3/4"	1"3/16-12h	Z669071912*	218,52
1"	1"7/16-12h	Z669072316*	318,94
1" 1/4	1"11/16-12h	Z669072720	447,20

*Hasta fin de existencias / *Until end of stock* / Jusqu´à la fin du stock / *Fino ad esaurimento*

Hembras giratorias 45° ORFS asiento plano

ORFS Swivel female (45° Elbow)

Coude 45° femelle ORFS

Femmina 45° ORFS

DN	ROSCA THREAD	Referencia Part n°	€
3/4"	1"3/16-12h	Z669081912*	218,52
1"	1"7/16-12h	Z669082316*	318,94
1" 1/4	1"11/16-12h	Z669082720	447,20

*Hasta fin de existencias / *Until end of stock* / Jusqu´à la fin du stock / *Fino ad esaurimento*

Machos ORFS

ORFS Male

Mâle ORFS

Maschio ORFS

DN	ROSCA THREAD	Referencia Part n°	€
3/4"	1"3/16-12h	Z669121912	128,12

Hasta fin de existencias / *Until end of stock* / Jusqu´à la fin du stock / *Fino ad esaurimento*

Hembras giratorias Métricas cono 24° con junta tórica

Metric swivel female 24° seat with o'ring

Femelle Métrique 24° avec o'ring

Femmina Metrica sede 24° con o'ring

DN	TUBO PIPE	SERIE SERIES	ROSCA THREAD	Referencia Part n°	€
1/2"	16	S	M24x1.5	Z66204241608*	27,53
3/4"	20	S	M30x2	Z66204302012*	46,56
3/4"	25	S	M36X2	Z66204362512*	61,42
1"	25	S	M36X2	Z66204362516*	83,09
1"	30	S	M42X2	Z66204423016*	74,04
1"1/4	38	S	M52X2	Z66204523820	106,35
1"1/2	38	S	M52X2	Z66204523824	141,10

*Hasta fin de existencias / *Until end of stock* / Jusqu´à la fin du stock / *Fino ad esaurimento*

Hembras giratorias 90° Métricas cono 24° con junta tórica

Metric swivel female 24° seat with o'ring (90° Elbow)

Coude 90° femelle Métrique 24° avec o'ring

Femmina Metrica 90° sede 24° con o'ring

DN	TUBO PIPE	SERIE SERIES	ROSCA THREAD	Referencia Part n°	€
3/4"	20	S	M30x2	Z66205302012*	64,12
3/4"	25	S	M36X2	Z66205362512*	97,96
1"	25	S	M36X2	Z66205362516*	136,15
1"	30	S	M42X2	Z66205423016*	123,63
1"1/4	38	S	M52X2	Z66205523820	179,17

*Hasta fin de existencias / *Until end of stock* / Jusqu´à la fin du stock / *Fino ad esaurimento*

Hembras giratorias 45° Métricas cono 24° con junta tórica

Metric swivel female 24° seat with o'ring (45° Elbow)

Coude 45° femelle Métrique 24° avec o'ring

Femmina Metrica 45° sede 24°

DN	TUBO PIPE	SERIE SERIES	ROSCA THREAD	Referencia Part n°	€
3/4"	20	S	M30x2	Z66206302012*	64,12
3/4"	25	S	M36X2	Z66206362512*	97,96
1"	30	S	M42X2	Z66206423016*	123,63
1"1/4	38	S	M52X2	Z66206523820	179,17

*Hasta fin de existencias / *Until end of stock* / Jusqu´à la fin du stock / *Fino ad esaurimento*

Machos fijos Métricos cono 24°

Metric male stud 24° cone

Mâle Métrique cone 24°

Maschio Metrico sede 24° con o'ring

DN	TUBO PIPE	SERIE SERIES	ROSCA THREAD	Referencia Part n°	€
3/4"	20	S	M30x2	Z66203302012*	49,27
3/4"	25	S	M36X2	Z66203362512*	68,84
1"	30	S	M42X2	Z66203423016*	78,83
1"1/4	38	S	M52x2	Z66203523820	135,30

*Hasta fin de existencias / *Until end of stock* / Jusqu´à la fin du stock / *Fino ad esaurimento*

CONEXIONES SERIE BW R12/4SP/4SH NO PELAR

Fittings BW Series R12/4SP/4SH No Skive
Embouts R12/4SP/4SH Série BW Sans dénuder
Raccordi R12/4SP/4SH Serie BW senza spellatura

Bridas rectas SAE 3000 PSI

3000 PSI SAE Straight Flange / Code 61

Bride SAE droite série 3000 PSI

Flangia diritta SAE 3000

DN	Ø		Referencia Part n°	€
1/2"	30.2		**Z661820808***	**57,28**
3/4"	38.1		**Z661821212***	**60,75**
1"	44.5		**Z661821616***	**75,46**
1"1/4	50.8		**Z661822020**	**125,74**
1"1/4	60.3	NEW	**Z661822420**	**148,28**
1"1/2	60.3		**Z661822424**	**160,60**
2"	71.4		**Z661823232**	**250,43**

***Hasta fin de existencias** / *Until end of stock* / Jusqu´à la fin du stock / *Fino ad esaurimento*

Bridas a 90° SAE 3000 PSI

3000 PSI SAE Flange (90° Elbow) / Code 61

Bride SAE coude 90° série 3000 PSI

Flangia 90° SAE 3000

DN	Ø	Referencia Part n°	€
3/4"	38.1	**Z661831212***	**87,59**
1"	44.5	**Z661831616***	**130,03**
1"1/4	50.8	**Z661832020**	**169,39**
1"1/2	60.3	**Z661832424**	**280,05**
2"	71.4	**Z661833232**	**393,04**

***Hasta fin de existencias** / *Until end of stock* / Jusqu´à la fin du stock / *Fino ad esaurimento*

Bridas a 45° SAE 3000 PSI

3000 PSI SAE Flange (45° Elbow) / Code 61

Bride SAE coude 45° série 3000 PSI

Flangia 45° SAE 3000

DN	Ø	Referencia Part n°	€
3/4"	38.1	**Z661841212***	**87,59**
1"	44.5	**Z661841616***	**130,03**
1"1/4	50.8	**Z661842020**	**169,39**
1"1/2	60.3	**Z661842424**	**280,05**
2"	71.4	**Z661843232**	**393,04**

***Hasta fin de existencias** / *Until end of stock* / Jusqu´à la fin du stock / *Fino ad esaurimento*

Bridas recta SAE 6000 PSI

6000 PSI SAE Straight Flange / Code 62

Bride SAE droite série 6000 PSI

Flangia diritta SAE 6000

DN	Ø	Referencia Part n°	€
1/2"	31.8	**Z662820808***	**61,24**
3/4"	41.3	**Z662821212***	**69,38**
1"	47.6	**Z662821616***	**83,34**
1"1/4	54	**Z662822020**	**127,63**
1"1/2	63.5	**Z662822424**	**162,73**
2"	79.4	**Z662823232**	**262,83**

***Hasta fin de existencias** / *Until end of stock* / Jusqu´à la fin du stock / *Fino ad esaurimento*

Bridas a 90° SAE 6000 PSI

6000 PSI SAE Flange (90° Elbow) / Code 62

Bride SAE coude 90° série 6000 PSI

Flangia 90° SAE 6000

DN	Ø	Referencia Part n°	€
1/2"	31.8	**Z662830808***	**77,62**
5/8"	41.3	**Z662831210***	**118,94**
3/4"	41.3	**Z662831212***	**93,87**
1"	47.6	**Z662831616***	**131,53**
1"1/4	54	**Z662832020**	**174,26**
1"1/2	63.5	**Z662832424**	**285,65**
2"	79.4	**Z662833232**	**406,52**

***Hasta fin de existencias** / *Until end of stock* / Jusqu´à la fin du stock / *Fino ad esaurimento*

Bridas a 45° SAE 6000 PSI

6000 PSI SAE Flange (45° Elbow) / Code 62

Bride SAE coude 45° série 6000 PSI

Flangia 45° SAE 6000

DN	Ø	Referencia Part n°	€
1/2"	31.8	**Z662840808***	**77,62**
5/8"	41.3	**Z662841210***	**118,94**
3/4"	41.3	**Z662841212***	**93,87**
1"	47.6	**Z662841616***	**131,53**
1"1/4	54	**Z662842020**	**174,26**
1"1/2	63.5	**Z662842424**	**285,65**
2"	79.4	**Z662843232**	**406,52**

***Hasta fin de existencias** / *Until end of stock* / Jusqu´à la fin du stock / *Fino ad esaurimento*

CONEXIONES INTERLOCK

Interlock series
Embouts Interlock
Serie Interlock

Casquillos Interlock 4SH

Ferrules DIN 20023 - 4SH Interlock

Jupes à sertir DIN 20023 - 4SH Interlock

Boccola pressare per DIN 20023 - 4SH Interlock

DN	MANGUERA HOSE	Referencia Part n°	€
3/4"	4SH / R13 / R15	**ZA610101200**	**34,61**
1"	4SH / R13 / R15	**ZA610101600**	**50,93**
1"1/4	4SH	**ZA610102000**	**78,63**
1"1/2	4SH	**ZA610102400**	**99,40**
2"	4SH	**ZA610103200**	**155,00**

Casquillos Interlock R13/R15

Ferrules SAE 100 R13/R15 Interlock

Jupes à sertir R13/R15 Interlock

Boccola pressare per SAE 100 R13/R15 Interlock

DN	Referencia Part n°	€
1" 1/4	**Z610102000**	**87,38**
1"1/2	**Z610102400**	**109,25**
2"	**Z610103200**	**160,68**

Para 3/4" y 1" son los mismos casquillos que en 4SH */ 3/4" and 1" are the same ferrules as in 4SH* / 3/4" et 1" sont les mêmes jupes que pour 4SH */ Per 3/4" e 1" si utilizza la boccola 4SH*

Hembras giratorias rectas rosca BSP cono 60° Interlock con junta

BSP 60° cone Swivel female Interlock with o'ring

Femelle droite gaz cylindrique BSP 60° Interlock avec joint torique

Femmina diritta BSP sede 60° Interlock con o'ring

DN	ROSCA THREAD	Referencia Part n°	€
3/4"	3/4" BSP	**Z641001212**	**38,88**
1"	1" BSP	**Z641001616**	**55,13**
1"1/4	1"1/4 BSP	**Z641002020**	**90,16**
1"1/2	1"1/2 BSP	**Z641002424**	**108,58**

Hasta fin de existencias */ Until end of stock* / Jusqu´à la fin du stock */ Fino ad esaurimento*

Hembras giratoria 90° BSP cono 60° Interlock con junta

BSP 60° cone Swivel female Interlock (90° Elbow) with o'ring

Coude 90° femelle gaz cylindrique BSP 60° Interlock avec joint torique

Femmina 90° BSP sede 60° Interlock con o'ring

DN	ROSCA THREAD	Referencia Part n°	€
3/4"	3/4" BSP	**Z641071212**	**60,50**
1"	1" BSP	**Z641071616**	**96,71**
1"1/4	1"1/4 BSP	**Z641072020**	**142,35**
1"1/2	1"1/2 BSP	**Z641072424**	**225,09**
2"	2" BSP	**Z641073232**	**432,39**

Hasta fin de existencias / Until end of stock / Jusqu´à la fin du stock / Fino ad esaurimento

Machos cilíndricos BSP cono 60° Interlock

BSP 60° Male cone

Mâle gaz cylindrique BSP 60° Interlock

Maschio BSP cilindrico sede 60° Interlock

DN	ROSCA THREAD	Referencia Part n°	€
3/4"	3/4" BSP	**Z641121212**	**43,34**
1"	1" BSP	**Z641121616**	**72,05**
1"1/4	1"1/4 BSP	**Z641122020**	**109,66**
1"1/2	1"1/2 BSP	**Z641122424**	**158,37**
2"	2" BSP	**Z641123232**	**266,96**

Hembras giratoria 45° BSP cono 60° Interlock con junta

BSP 60° cone Swivel female Interlock (45° Elbow) with o'ring

Coude 45° femelle gaz cylindrique BSP 60° Interlock avec joint torique

Femmina 45° BSP sede 60° Interlock con o'ring

DN	ROSCA THREAD	Referencia Part n°	€
3/4"	3/4" BSP	**Z641081212**	**60,50**
1"	1" BSP	**Z641081616**	**96,58**
1"1/4	1"1/4 BSP	**Z641082020**	**142,35**
1"1/2	1"1/2 BSP	**Z641082424**	**225,09**
2"	2" BSP	**Z641083232**	**432,39**

Hasta fin de existencias / Until end of stock / Jusqu´à la fin du stock / Fino ad esaurimento

Machos cónicos NPT Interlock

NPT Male pipe straight Interlock

Mâle conique NPT Interlock

Maschio conico NPT Interlock

DN	ROSCA THREAD	Referencia Part n°	€
3/4"	3/4" NPT	**Z641611212**	**45,17**
1"	1" NPT	**Z641611616**	**66,74**
1"1/4	1"1/4 NPT	**Z641612020**	**112,44**
1"1/2	1"1/2 NPT	**Z641612424**	**146,51**
2"	2" NPT	**Z641613232**	**270,82**

CONEXIONES INTERLOCK

Interlock series
Embouts Interlock
Serie Interlock

Hembras giratorias rectas BSP cono 60° con junta (tca engargolada) NEW

BSP 60° cone Swivel female Interlock with o'ring wire nut
Femelle droite gaz cylindrique BSP 60° Interlock avec joint torique écrou à jonc
Femmina diritta BSP sede 60° Interlock con o'ring dado spinato

DN	ROSCA THREAD	Referencia Part n°	€
3/4"	3/4" BSP	**Z645001212**	**38,79**
1"	1" BSP	**Z645001616**	**54,18**
1"1/4	1"1/4 BSP	**Z645002020**	**80,50**
1"1/2	1"1/2 BSP	**Z645002424**	**96,94**
2"	2" BSP	**Z645003232**	**167,28**

Hembras giratorias 45° BSP cono 60° con junta (tca engargolada) NEW

BSP 60° cone Swivel female Interlock (45° Elbow) with o'ring wire nut
Coude 45° femelle gaz cylindrique BSP 60° Interlock avec joint torique écrou à jonc
Femmina 45° BSP sede 60° Interlock con o'ring dado spinato

DN	ROSCA THREAD	Referencia Part n°	€
3/4"	3/4" BSP	**Z645081212**	*
1"	1" BSP	**Z645081616**	*
1"1/4	1"1/4 BSP	**Z645082020**	*
1"1/2	1"1/2 BSP	**Z645082424**	*
2"	2" BSP	**Z645083232**	*

Hembras giratorias 90° BSP cono 60° con junta (tca engargolada) NEW

BSP 60° cone Swivel female Interlock (90° Elbow) with o'ring wire nut
Coude 90° femelle gaz cylindrique BSP 60° Interlock avec joint torique écrou à jonc
Femmina 90° BSP sede 60° Interlock con o'ring dado spinato

DN	ROSCA THREAD	Referencia Part n°	€
3/4"	3/4" BSP	**Z645071212**	*
1"	1" BSP	**Z645071616**	*
1"1/4	1"1/4 BSP	**Z645072020**	*
1"1/2	1"1/2 BSP	**Z645072424**	*
2"	2" BSP	**Z645073232**	*

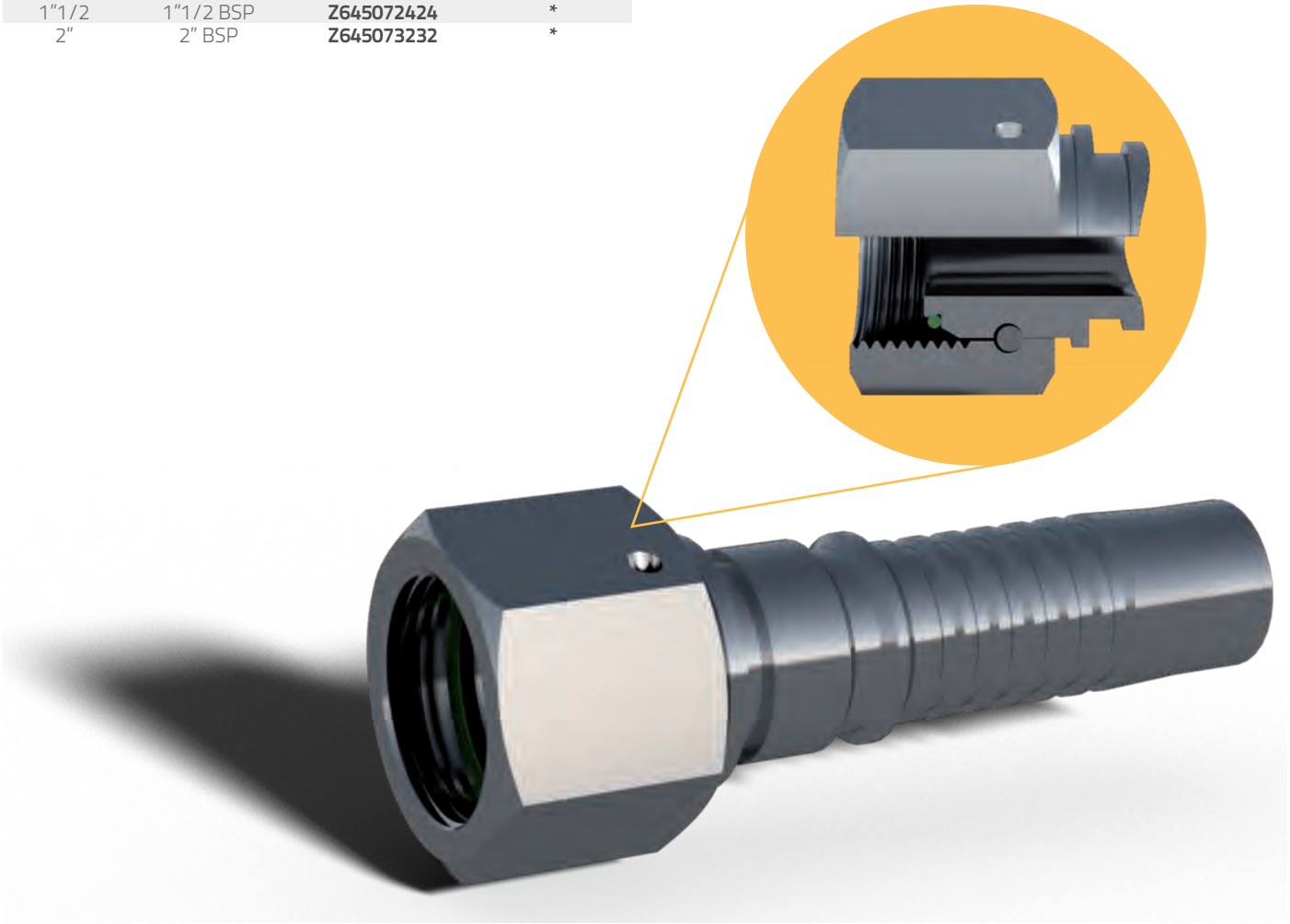

***Consultar** / On request **/ Sur demande** / Su richiesta

CONEXIONES INTERLOCK

Interlock series
Embouts Interlock
Serie Interlock

Hembras giratorias JIC 37° doble hexagonal Interlock

Double hexagonal JIC 37° Swivel female

Femelle JIC 37° double hexagonal

Femmina diritta JIC 37° doppio esagono

DN	ROSCA THREAD	Referencia Part n°	€
3/4"	1"1/16 12h UN	**Z642421712**	**55,87**
1"	1"5/16 12h UN	**Z642422116**	**86,32**
1"1/4	1"5/8 12h UN	**Z642422620**	**203,83**
1"1/2	1"7/8 12h UN	**Z642423024**	**311,38**
2"	2"1/2 12h UN	**Z642424032**	**458,59**

Hembras giratorias rectas JIC 37° Interlock

JIC 37° Swivel female Interlock

Femelle tourn.droite JIC 37° Interlock

Femmina gir.diritta JIC 37° Interlock

DN	ROSCA THREAD	Referencia Part n°	€
3/4"	1"1/16 12h UN	**Z641421712**	**42,15**
1"	1"5/16 12h UN	**Z641422116**	**45,67**
1"1/4	1"5/8 12h UN	**Z641422620**	**85,10**
1"1/4	1"7/8 12h UN	**Z641423020**	**120,44**
1"1/2	1"7/8 12h UN	**Z641423024**	**119,26**
2"	2"1/2 12h UN	**Z641424032**	**211,92**

Machos JIC 37° Interlock

JIC 37° male Interlock

Mâle JIC 37° Interlock

Maschio JIC 37° Interlock

DN	ROSCA THREAD	Referencia Part n°	€
3/4"	1"1/16 12h UN	**Z641401712**	**62,11**
1"	1"5/16 12h UN	**Z641402116**	**96,77**
1"1/4	1"5/8 12h UN	**Z641402620**	**129,72**
1"1/2	1"7/8 12h UN	**Z641403024**	**120,73**
2"	2"1/2 12h UN	**Z641404032**	**251,07**

Hembras giratorias 90° JIC 37° Interlock

JIC 37° Swivel female Interlock (90° Elbow)

Coude 90° femelle tournante JIC 37° Interlock

Femmina gir. 90° JIC 37° Interlock

DN	ROSCA THREAD	Referencia Part n°	€
3/4"	1"1/16 12h UN	**Z641381712**	**60,29**
1"	1"5/16 12h UN	**Z641382116**	**106,22**
1"1/4	1"5/8 12h UN	**Z641382620**	**147,05**
1"1/2	1"7/8 12h UN	**Z641383024**	**237,91**
2"	2"1/2 12h UN	**Z641384032**	**469,65**

Hembras giratorias 45° JIC 37° Interlock

JIC 37° Swivel female Interlock (45° Elbow)

Coude 45° femelle tournante JIC 37° Interlock

Femmina gir. 45° JIC 37° Interlock

DN	ROSCA THREAD	Referencia Part n°	€
3/4"	1"1/16 12h UN	**Z641391712**	**60,29**
1"	1"5/16 12h UN	**Z641392116**	**106,05**
1"1/4	1"5/8 12h UN	**Z641392620**	**147,05**
1"1/2	1"7/8 12h UN	**Z641393024**	**237,91**
2"	2"1/2 12h UN	**Z641394032**	**469,65**

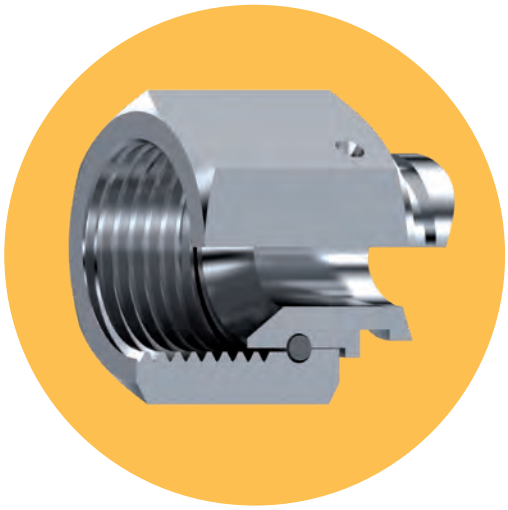

Bajo Consulta
On Request

CONEXIONES INTERLOCK

Interlock series
Embouts Interlock
Serie Interlock

Hembras giratorias rectas Métricas cono 24° Interlock con junta tórica

Metric swivel female 24° seat serie S Interlock with o'ring

Femelle droite Métrique 24° Interlock avec o'ring

Femmina Metrica sede 24° con o'ring serie S Interlock

DN	TUBO PIPE	SERIE SERIES	ROSCA THREAD		Referencia Part n°	€
3/4"	20	S	M30x2		**Z64204302012**	**46,39**
3/4"	25	S	M36x2		**Z64204362512**	**61,31**
1"	30	S	M42x2		**Z64204423016**	**80,61**
1"1/4	38	S	M52x2		**Z64204523820**	**115,82**
1"1/2	38	S	M52x2	NEW	**Z64204523824**	**161,32**

Hembras 90° Métricas cono 24° Interlock con junta tórica

Metric swivel female 24° seat serie S Interlock with o'ring (90° Elbow)

Coude 90° femelle Métrique 24° Interlock avec o'ring

Femmina Metrica 90° sede 24° con o'ring serie S Interlock

DN	TUBO PIPE	SERIE SERIES	ROSCA THREAD		Referencia Part n°	€
3/4"	20	S	M30x2		**Z64205302012**	**69,23**
3/4"	25	S	M36x2		**Z64205362512**	**105,64**
1"	30	S	M42x2		**Z64205423016**	**142,07**
1"1/4	38	S	M52x2		**Z64205523820**	**191,24**
1"1/2	38	S	M52x2	NEW	**Z64205523824**	**265,89**

Hembras 45° Métricas cono 24° Interlock con junta tórica

Metric swivel female 24° seat serie S Interlock with o'ring (45° Elbow)

Coude 45° femelle Métrique 24° Interlock avec o'ring

Femmina Metrica 45° sede 24° serie S Interlock

DN	TUBO PIPE	SERIE SERIES	ROSCA THREAD	Referencia Part n°	€
3/4"	20	S	M30x2	**Z64206302012**	**69,23**
3/4"	25	S	M36x2	**Z64206362512**	**105,64**
1"	30	S	M42x2	**Z64206423016**	**142,07**
1"1/4	38	S	M52x2	**Z64206523820**	**191,24**

Machos Métricos cono 24° Interlock

Metric male stud 24° cone serie S Interlock

Mâle Métrique cone 24° Interlock

Maschio Metrico sede 24° con o'ring serie S Interlock

DN	TUBO PIPE	SERIE SERIES	ROSCA THREAD	Referencia Part n°	€
3/4"	20	S	M30x2	**Z64203302012**	**52,75**
3/4"	25	S	M36x2	**Z64203362512**	**85,59**
1"	30	S	M42x2	**Z64203423016**	**102,44**
1"1/4	38	S	M52x2	**Z64203523820**	**142,38**

Hembras giratorias rectas ORFS Interlock

Interlock ORFS Swivel female straight

Femelle droite ORFS Interlock

Femmina diritta ORFS Interlock

DN	ROSCA THREAD	Referencia Part n°	€
3/4"	1"3/16-12h	**Z649011912**	**73,49**
1"	1"7/16-12h	**Z649012316**	**133,91**
1"1/4	1" 11/16-12h	**Z649012720**	**156,17**
1"1/2	2"-12h	**Z649013224**	**235,64**

Machos ORFS Interlock

Interlock ORFS Male

Mâle ORFS Interlock

Maschio ORFS Interlock

DN	ROSCA THREAD	Referencia Part n°	€
3/4"	1"3/16-12h	**Z649121912**	**128,32**
1"	1"7/16-12h	**Z649122316**	**190,69**
1"1/4	1" 11/16-12h	**Z649122720**	**263,76**
1"1/2	2"-12h	**Z649123224**	**392,09**

Hembras giratorias 90° ORFS Interlock

Interlock ORFS Swivel female (90° Elbow)

Coude 90° femelle ORFS Interlock

Femmina 90° ORFS Interlock

DN	ROSCA THREAD	Referencia Part n°	€
3/4"	1"3/16-12h	**Z649071912**	**218,86**
1"	1"7/16-12h	**Z649072316**	**317,77**
1" 1/4	1" 11/16-12h	**Z649072720**	**445,56**
1" 1/2	2"-12h	**Z649073224**	**1.284,98**

Hembras giratorias 45° ORFS Interlock

Interlock ORFS Swivel female (45° Elbow)

Coude 45° femelle ORFS Interlock

Femmina 45° ORFS Interlock

DN	ROSCA THREAD	Referencia Part n°	€
3/4"	1"3/16-12h	**Z649081912**	**218,86**
12	1"7/16-12h	**Z649082316**	**317,77**
1" 1/4	1" 11/16-12h	**Z649082720**	**445,56**
1" 1/2	2"-12h	**Z649083224**	**1.284,98**

CONEXIONES INTERLOCK

Interlock series
Embouts Interlock
Serie Interlock

Bridas rectas SAE 3000 PSI Interlock

3000 PSI SAE Straight Flange Interlock / Code 61

Bride SAE droite série 3000 PSI Interlock

Flangia diritta SAE 3000 Interlock

DN	Ø	Referencia Part n°	€
3/4"	38.1	**Z641821212**	**74,30**
3/4"	44.5	**Z641821612**	**95,13**
1"	44.5	**Z641821616**	**86,34**
1"	50.8	**Z641822016**	**102,21**
1"1/4	50.8	**Z641822020**	**123,22**
1"1/4	60.3	**Z641822420**	**167,63**
1"1/2	60.3	**Z641822424**	**179,86**
1"1/2	71.4	**Z641823224**	**246,96**
2"	71.4	**Z641823232**	**280,91**

Bridas Rectas SAE 6000 PSI Interlock

6000 PSI SAE Straight Flange Interlock / Code 62

Bride SAE droite série 6000 PSI Interlock

Flangia diritta SAE 6000 Interlock

DN	Ø	Referencia Part n°	€
3/4"	41,3	**Z642821212**	**68,43**
3/4"	47,63	**Z642821612**	**99,45**
1"	47,63	**Z642821616**	**88,56**
1"	53,98	**Z642822016**	**126,15**
1"1/4	54	**Z642822020**	**125,06**
1"1/4	63,5	**Z642822420**	**177,27**
1"1/2	63,5	**Z642822424**	**171,37**
1"1/2	79,38	**Z642823224**	**289,87**
2"	79,38	**Z642823232**	**273,77**

Bridas 90° SAE 3000 PSI Interlock

3000 PSI SAE Flange Interlock (90° Elbow) / Code 61

Coude 90° bride SAE série 3000 PSI Interlock

Flangia 90° SAE 3000 Interlock

DN	Ø	Referencia Part n°	€
3/4"	38,1	**Z641831212**	**86,40**
3/4"	44,45	**Z641831612**	**127,57**
1"	44,45	**Z641831616**	**124,68**
1"	50,8	**Z641832016**	**195,98**
1"1/4	50,8	**Z641832020**	**171,75**
1"1/4	60,33	**Z641832420**	**271,56**
1"1/2	60.3	**Z641832424**	**280,49**
1"1/2	71.4	**Z641833224**	**401,69**
2"	71,4	**Z641833232**	**393,66**

Bridas 90° SAE 6000 PSI Interlock

6000 PSI SAE Flange Interlock (90° Elbow) / Code 62

Coude 90° bride SAE série 6000 PSI Interlock

Flangia 90° SAE 6000 Interlock

DN	Ø	Referencia Part n°	€
3/4"	41.3	**Z642831212**	**108,35**
3/4"	44,45	**Z642831612**	**134,64**
1"	47,63	**Z642831616**	**146,77**
1"	53,98	**Z642832016**	**198,91**
1"1/4	53,98	**Z642832020**	**188,96**
1"1/4	63,5	**Z642832420**	**289,14**
1"1/2	63,5	**Z642832424**	**282,66**
1"1/2	79,38	**Z642833224**	**432,59**
2"	79,38	**Z642833232**	**409,01**

Bridas 45° SAE 3000 PSI Interlock

3000 PSI SAE Flange Interlock (45° Elbow) / Code 61

Coude 45° bride SAE série 3000 PSI Interlock

Flangia 45° SAE 3000 Interlock

DN	Ø	Referencia Part n°	€
3/4"	38,1	**Z641841212**	**86,40**
3/4"	44,5	**Z641841612**	**127,57**
1"	44,5	**Z641841616**	**125,54**
1"	50,8	**Z641842016**	**195,98**
1"1/4	50,8	**Z641842020**	**172,61**
1"1/4	60,3	**Z641842420**	**271,56**
1"1/2	60.3	**Z641842424**	**280,49**
2"	71.4	**Z641843224**	**401,69**
2"	71.4	**Z641843232**	**393,66**

Bridas 45° SAE 6000 PSI Interlock

6000 PSI SAE Flange Interlock (45° Elbow) / Code 62

Coude 45° bride SAE série 6000 PSI Interlock

Flangia 45° SAE 6000 Interlock

DN	Ø	Referencia Part n°	€
3/4"	41,3	**Z642841212**	**109,51**
3/4"	47,6	**Z642841612**	**134,64**
1"	47,6	**Z642841616**	**145,58**
1"	54	**Z642842016**	**198,91**
1"1/4	54	**Z642842020**	**188,96**
1"1/4	63,5	**Z642842420**	**289,14**
1"1/2	63,5	**Z642842424**	**282,66**
1"1/2	79,4	**Z642843224**	**432,59**
2"	79,4	**Z642843232**	**409,01**

CONEXIONES UNA SOLA PIEZA SERIE 43 R1AT/R2AT/1SN/2SN/R16/2SC/R17

One piece fittings 43 Series R1AT/R2AT/1SN/2SN/R16/2SC/R17
Embouts pré-sertis R1AT/R2AT/1SN/2SN/R16/2SC/R17 Série 43
Raccordi compatti R1AT/R2AT/1SN/2SN/R16/2SC/R17 Serie 43

Hembras giratorias rectas una sola pieza JIC 37°

One piece JIC 37° Swivel female

Femelle pré-sertie JIC 37°

Femmina dirittta compatta JIC 37°

DN	ROSCA THREAD		Referencia Part n°	€
1/4"	7/16" 20h UNF		881420704	22,44
1/4"	1/2" 20h UNF	NEW	881420804	23,68
5/16"	1/2" 20h UNF	NEW	881420805	28,76
5/16"	9/16" 18h UNF	NEW	881420905	27,73
3/8"	9/16" 18h UNF		881420906	27,66
1/2"	3/4" 16h UNF		881421208	31,63
5/8"	7/8" 14h UNF		881421410	40,56
1/2"	1"1/16 12h UN		881421708	52,88
5/8"	1"1/16 12h UN		881421710	48,35
3/4"	1"1/16 12h UN		881421712	50,21
1"	1"1/16 12h UN	NEW	881421716	83,56
3/4"	1"5/16 12h UN	NEW	881422112	64,48
1"	1"5/16 12h UN		881422116	84,48
5/8"	1"5/8 12h UN	NEW	881422616	114,83
1"1/4	1"5/8 12h UN		881422620	150,89
1"1/2	1"7/8 12h UN		881423024	195,66
2"	2"1/2 12h UN		881424032	337,93

Hembras giratorias 90° una sola pieza JIC 37°

One piece JIC 37° Swivel female (90° Elbow)

Coude 90° femelle pré-sertie JIC 37°

Femmina 90° compatta JIC 37°

DN	ROSCA THREAD		Referencia Part n°	€
1/4"	7/16" 20h UNF		881380704	31,87
5/16"	1/2" 20h UNF	NEW	881380805	50,23
3/8"	9/16" 18h UNF		881380906	40,21
1/2"	3/4" 16h UNF		881381208	45,91
1/2"	7/8" 14h UNF		881381408	48,64
5/8"	7/8" 14h UNF		881381410	60,05
3/4"	1"1/16 12h UN		881381712	74,97
3/4"	1" 5/16 12h UN		881382112	103,73
1"	1"5/16 12h UN		881382116	119,50
1"1/4	1"5/8 12h UN		881382620	209,01
1"1/2	1"7/8 12h UN		881383024	315,26
2"	2"1/2 12h UN		881384032	620,24

Hembras giratorias 45° una sola pieza JIC 37°

One piece JIC 37° Swivel female (45° Elbow)

Coude 45° femelle pré-sertie JIC 37°

Femmina 45° compatta JIC 37°

DN	ROSCA THREAD	Referencia Part n°	€
1/4"	7/16" 20h UNF	881390704	32,94
1/4"	9/16" 18h UNF	881390904	46,72
3/8"	9/16" 18h UNF	881390906	41,74
3/8"	3/4" 16h UNF	881391206	46,74
1/2"	3/4" 16h UNF	881391208	43,36
1/2"	7/8" 14h UNF	881391408	49,81
3/4"	1"1/16 12h UN	881391712	74,97
1"	1"5/16 12h UN	881392116	119,50
1"1/4	1"5/8 12h UN	881392620	209,01
1"1/2	1"7/8 12h UN	881393024	302,52
2"	2"1/2 12h UN	881394032	620,23

Machos una sola pieza rosca JIC 37°

One piece JIC 37° male

Mâle pré-serti JIC 37°

Maschio compatto JIC sede 37°

DN	ROSCA THREAD		Referencia Part n°	€
1/4"	7/16" 20h UNF		881400704	29,02
3/8"	9/16" 18h UNF		881400906	36,73
1/2"	3/4" 16h UNF		881401208	36,95
3/8"	7/8" 14h UNF	NEW	881401406	41,12
1/2"	7/8" 14h UNF	NEW	881401408	34,23
5/8"	7/8" 14h UNF		881401410	45,70
5/8"	1"1/16 12h UN	NEW	881401710	53,59
3/4"	1"1/16 12h UN		881401712	58,19
1"	1"1/16 12h UN	NEW	881401716	81,78
3/4"	1"5/16 12h UN	NEW	881402112	76,93
1"	1"5/16 12h UN		881402116	96,24
1"1/4	1"5/8 12h UN		881402620	160,90
1"1/2	1"7/8 12h UN		881403024	199,11
2"	2"1/2 12h UN		881404032	383,46

Hembras giratorias rectas una sola pieza JIC 37° doble hexagonal

One piece double hexagonal JIC 37° Swivel female

Femelle pré-sertie JIC 37° double hexagonal

Femmina diritta JIC 37° doppio esagono

DN	ROSCA THREAD		Referencia Part n°	€
1/4"	7/16" 20h UNF		882420704	27,77
1/4"	1/2" 20h UNF		882420804	32,53
1/4"	9/16" 18h UNF		882420904	35,56
3/8"	9/16" 18h UNF		882420906	31,74
5/16"	1/2" 20h UNF	NEW	882420805	42,10
3/8"	3/4" 16h UNF		882421206	37,85
1/2"	3/4" 16h UNF		882421208	34,10
3/4"	3/4" 16h UNF		882421212	73,45
1/2"	7/8" 14h UNF		882421408	47,38
5/8"	7/8" 14h UNF		882421410	53,47
5/8"	1"1/16 12h UN		882421710	57,87
3/4"	1"1/16 12h UN		882421712	59,82
1"	1"1/16 12h UN		882421716	101,00
3/4"	1"5/16 12h UN		882422112	79,65
1"	1"5/16 12h UN		882422116	96,23
1"1/4	1"5/8 12h UN		882422620	183,90
1"1/2	1"7/8 12h UN		882423024	232,47
2"	2"1/2 12h UN		882424032	403,37

CONEXIONES UNA SOLA PIEZA SERIE 43 R1AT/R2AT/1SN/2SN/R16/2SC/R17

One piece fittings 43 Series R1AT/R2AT/1SN/2SN/R16/2SC/R17
Embouts pré-sertis R1AT/R2AT/1SN/2SN/R16/2SC/R17 Série 43
Raccordi compatti R1AT/R2AT/1SN/2SN/R16/2SC/R17 Serie 43

Hembras giratorias rectas una sola pieza ORFS doble hexagonal

One piece double hexagonal ORFS Swivel female

Femelle pré-sertie ORFS double hexagonal

Femmina diritta compatta ORFS doppio esagono

DN	ROSCA THREAD		Referencia Part n°	€
1/4"	9/16"-18h		889000904	41,77
1/4"	11/16"-16h		889001104	53,20
3/8"	11/16" 16h		889001106	49,92
3/8"	13/16"-16h		889001306	60,19
1/2"	13/16" 16h		889001308	55,46
1/2	1"-14h		889001608	92,02
5/8"	1"-14h		889001610	77,64
1/2"	1" 3/16-12h		889001908	105,57
5/8"	1"3/16-12h	NEW	889001910	101,52
3/4"	1"3/16-12h		889001912	113,06
3/4"	1" 7/16-12h		889002312	129,11
1"	1"7/16-12h		889002316	129,61
1"1/4	1"11/16-12h		889002720	239,49
1"1/2	2"-12h		889003224	281,37

Hembras giratorias 90° una sola pieza ORFS

One piece ORFS Swivel female (90° Elbow)

Coude 90° femelle pré-sertie ORFS

Femmina 90° compatta ORFS

DN	ROSCA THREAD	Referencia Part n°	€
1/4"	9/16"-18h	889070904	71,15
1/4"	11/16"-16h	889071104	87,29
3/8"	11/16"-16h	889071106	86,34
3/8"	13/16"-16"	889071306	94,03
1/2"	13/16"-16h	889071308	95,73
1/2"	1"-14h	889071608	135,34
5/8"	1"-14h	889071610	123,90
3/4"	1"3/16-12h	889071912	159,45
3/4"	1-7/16-12h	889072312	225,52
1"	1"7/16-12h	889072316	233,44
1"1/4	1"11/16-12h	889072720	338,82
1"1/2	2"-12h	889073224	868,04

Hembras giratorias 45° una sola pieza ORFS

One piece ORFS Swivel female (45° Elbow)

Coude 45° femelle pré-sertie ORFS

Femmina 45° compatta ORFS

DN	ROSCA THREAD	Referencia Part n°	€
1/4"	9/16"-18h	889080904	71,15
1/4"	11/16"-16h	889081104	87,29
3/8"	11/16"-16h	889081106	86,34
3/8"	13/16"-16h	889081306	94,03
1/2"	13/16" 16h	889081308	95,73
1/2"	1"-14h	889081608	135,34
5/8"	1"-14h	889081610	132,61
3/4"	1"3/16-12h	889081912	159,45
3/4"	1" 7/16-12h	889082312	225,52
1"	1"7/16-12h	889082316	233,44
1"1/4	1"11/16-12h	889082720	338,82
1"1/2	2"-12h	889083224	868,04

Machos una sola pieza ORFS

One piece ORFS male

Mâle pré-serti ORFS

Maschio compatto ORFS

DN	ROSCA THREAD	Referencia Part n°	€
1/4"	9/16"-18h	889120904	48,26
3/8"	11/16"-16h	889121106	49,45
1/2"	13/16" -16h	889121308	58,93
5/8"	1"-14h	889121610	83,18
3/4"	1"3/16-12h	889121912	106,47
1"	1"7/16-12h	889122316	154,46
1"1/4	1"11/16 -12h	889122720	229,28
1"1/2	2" -12h	889123224	319,36

CONEXIONES UNA SOLA PIEZA SERIE 43 R1AT/R2AT/1SN/2SN/R16/2SC/R17

One piece fittings 43 Series R1AT/R2AT/1SN/2SN/R16/2SC/R17
Embouts pré-sertis R1AT/R2AT/1SN/2SN/R16/2SC/R17 Série 43
Raccordi compatti R1AT/R2AT/1SN/2SN/R16/2SC/R17 Serie 43

Hembras giratorias rectas una sola pieza rosca NPSM cono 60°

One piece NPSM Swivel female 60° cone

Femelle pré-sertie NPSM cone 60°

Femmina diritta compatta NPSM sede 60°

DN	ROSCA THREAD	Referencia Part n°	€
1/4"	1/4" 18h NPSM	882610404	25,39
3/8"	3/8" 18h NPSM	882610606	29,29
1/2"	1/2" 14h NPSM	882610808	35,05
3/4"	3/4" 14h NPSM	882611212	56,76
1"	1" - 11 1/2 h NPSM	882611616	95,67

Hembras giratorias 90° una sola pieza rosca NPSM cono 60°

One piece NPSM Swivel female 60° cone (90° Elbow)

Coude 90° femelle pré-sertie NPSM cone 60°

Femmina 90° compatta NPSM sede 60°

DN	ROSCA THREAD	Referencia Part n°	€
1/4"	1/4" 18h NPSM	882620404	35,69
3/8"	3/8" 18h NPSM	882620606	40,96
1/2"	1/2" 14h NPSM	882620808	49,53
3/4"	3/4" 14h NPSM	882621212	85,59
1"	1" - 11 1/2 h NPSM	882621616	126,43

Hembras giratorias 45° una sola pieza rosca NPSM cono 60°

One piece NPSM Swivel female 60° cone (45° Elbow)

Coude 45° femelle pré-sertie NPSM cone 60°

Femmina 45° compatta NPSM sede 60°

DN	ROSCA THREAD	Referencia Part n°	€
1/4"	1/4" 18h NPSM	882630404	35,69
3/8"	3/8" 18h NPSM	882630606	40,96
1/2"	1/2" 14h NPSM	882630808	63,41
3/4"	3/4" 14h NPSM	882631212	85,60
1"	1" - 11 1/2 h NPSM	882631616	126,43

Machos una sola pieza rosca cónica NPT

One piece NPT male pipe straight

Mâle pré-serti NPT

Maschio compatto conico NPT

DN	ROSCA THREAD	Referencia Part n°	€
1/4"	1/8" NPT	881610204	30,07
1/4"	1/4" NPT	881610404	23,41
3/8"	1/4" NPT	881610406	35,64
1/4"	3/8" NPT	881610604	31,96
3/8"	3/8" NPT	881610606	27,58
1/2"	3/8" NPT	881610608	40,40
1/4	1/2 NPT	881610804	45,65
3/8"	1/2" NPT	881610806	42,18
1/2"	1/2" NPT	881610808	33,85
5/8"	1/2" NPT	881610810	43,78
3/4	1/2 NPT	881610812	59,89
1/2"	3/4" NPT	881611208	52,31
5/8"	3/4" NPT	881611210	51,62
3/4"	3/4" NPT	881611212	52,43
3/4"	1" NPT	881611612	75,89
1"	1" NPT	881611616	87,83
1"1/4	1"1/4 NPT	881612020	157,80
1"1/2	1"1/2 NPT	881612424	186,27
2"	2" NPT	881613232	302,24

Hembras giratorias rectas una sola pieza rosca NPSM cono 60° doble hexagonal

One piece double hexagonal NPSM Swivel female 60° cone

Femelle pré-sertie NPSM cone 60° double hexagonal

Femmina diritta compatta NPSM sede 60° doppio esagono

DN	ROSCA THREAD	Referencia Part n°	€
1/4"	1/4" 18h NPSM	883610404	38,46
3/8"	3/8" 18h NPSM	883610606	42,50
1/2"	1/2" 14h NPSM	883610808	46,13
3/4"	3/4" 14h NPSM	883611212	70,91
1"	1" - 11 1/2 h NPSM	883611616	115,74

Machos giratorios una sola pieza rosca cónica NPT

One piece NPT swivel male

Mâle tournant pré-serti NPT

Maschio girevole compatto conico NPT

DN	ROSCA THREAD		Referencia Part n°	€
1/4"	1/4" NPT		881650404	57,78
3/8"	3/8" NPT		881650606	67,69
3/8"	1/2" NPT	NEW	881650806	85,03
1/2"	1/2" NPT		881650808	73,87
1/2"	3/4" NPT	NEW	881651208	111,01
3/4"	3/4" NPT		881651212	99,65
1"	1"NPT		881651616	153,27

CONEXIONES UNA SOLA PIEZA SERIE 43 R1AT/R2AT/1SN/2SN/R16/2SC/R17

One piece fittings 43 Series R1AT/R2AT/1SN/2SN/R16/2SC/R17
Embouts pré-sertis R1AT/R2AT/1SN/2SN/R16/2SC/R17 Série 43
Raccordi compatti R1AT/R2AT/1SN/2SN/R16/2SC/R17 Serie 43

Bridas rectas una sola pieza SAE 3000 PSI

One piece 3000 PSI SAE Straight Flange / Code 61

Bride SAE droite pré-sertie série 3000 PSI

Flangia diritta compatta SAE 3000 PSI

DN	Ø	Referencia Part n°	€
1/2"	30.2	881820808	56,76
1/2"	38.1	881821208	94,92
3/4"	38.1	881821212	81,03
3/4"	44.5	881821612	111,81
1"	44.5	881821616	111,76
1"	50.8	881822016	145,92
1"1/4	50.8	881822020	168,38
1"1/4	60.3	881822420	223,78
1"1/2	60.3	881822424	215,68
1"1/2	71.4	881823224	329,61
2"	71.4	881823232	342,71

Bridas 90° una sola pieza SAE 3000 PSI

One piece 3000 PSI SAE Flange (90° Elbow)/ Code 61

Bride SAE coude 90° pré-sertie série 3000 PSI

Flangia 90° compatta SAE 3000 PSI

DN	Ø	Referencia Part n°	€
1/2"	30.2	881830808	77,18
1/2"	38.1	881831208	96,26
3/4"	38.1	881831212	110,89
3/4"	44.5	881831612	150,56
1"	44.5	881831616	153,44
1"	50.8	881832016	221,37
1"1/4	50.8	881832020	239,83
1"1/4	60.3	881832420	340,43
1"1/2	60.3	881832424	325,64
1"1/2	71.4	881833224	484,80
2"	71.4	881833232	482,80

Bridas 45° una sola pieza SAE 3000 PSI

One piece 3000 PSI SAE Flange (45° Elbow)/ Code 61

Bride SAE coude 45° pré-sertie série 3000 PSI

Flangia 45° compatta SAE 3000 PSI

DN	Ø	Referencia Part n°	€
1/2"	30.2	881840808	77,18
1/2"	38.1	881841208	96,26
3/4"	38.1	881841212	110,89
3/4"	44.5	881841612	150,56
1"	44.5	881841616	153,44
1"	50.8	881842016	223,69
1"1/4	50.8	881842020	239,83
1"1/4	60.3	881842420	340,43
1"1/2	60.3	881842424	325,64
2"	71.4	881843232	482,80

Bridas rectas una sola pieza SAE 6000 PSI

One piece 6000 PSI SAE Straight Flange / Code 62

Bride SAE droite pré-sertie série 6000 PSI

Flangia diritta compatta SAE 6000 PSI

DN	Ø	Referencia Part n°	€
1/2"	31.8	882820808	64,17
3/4"	41.3	882821212	92,68
1"	47.6	882821616	128,77
1"1/4	54	882822020	193,84
1"1/2	63.5	882822424	250,88
2"	79.4	882823232	411,91

Bridas 90° una sola pieza SAE 6000 PSI

One piece 6000 PSI SAE Flange (90° Elbow)/ Code 62

Bride SAE coude 90° pré-sertie série 6000 PSI

Flangia 90° compatta SAE 6000 PSI

DN	Ø	Referencia Part n°	€
1/2"	31.8	882830808	77,40
3/4"	41.3	882831212	117,72
1"	47.6	882831616	177,07
1"1/4	54	882832020	248,93
1"1/2	63.5	882832424	399,59
2"	79.4	882833232	506,09

Bridas 45° una sola pieza SAE 6000 PSI

One piece 6000 PSI SAE Flange (45° Elbow)/ Code 62

Bride SAE coude 45° pré-sertie série 6000 PSI

Flangia 45° compatta SAE 6000 PSI

DN	Ø	Referencia Part n°	€
1/2"	31.8	882840808	77,40
3/4"	41.3	882841212	117,80
1"	47.6	882841616	177,07
1"1/4	54	882842020	247,65
1"1/2	63.5	882842424	398,79
2"	79.4	882843232	506,09

CONEXIONES UNA SOLA PIEZA SERIE 43 R1AT/R2AT/1SN/2SN/R16/2SC/R17

One piece fittings 43 Series R1AT/R2AT/1SN/2SN/R16/2SC/R17
Embouts pré-sertis R1AT/R2AT/1SN/2SN/R16/2SC/R17 Série 43
Raccordi compatti R1AT/R2AT/1SN/2SN/R16/2SC/R17 Serie 43

Hembras giratorias rectas una sola pieza rosca Métrica cono 24° - DKO

One piece Metric female cone 24°

Femelle pré-sertie Métrique cone 24°

Femmina diritta compatta Metrica sede 24°

DN	TUBO PIPE	SERIE SERIES	ROSCA THREAD		Referencia Part n°	€
1/4"	6	L	M12x1.5		88804120604	22,89
1/4"	8	L	M14x1.5		88804140804	22,30
1/4"	10	L	M16x1.5		88804161004	23,76
3/8"	10	L	M16x1.5		88804161006	27,93
5/16"	10	L	M16x1.5		88804161005	26,93
1/4"	12	L	M18x1.5	NEW	88804181204	30,75
3/8"	12	L	M18x1.5		88804181206	27,07
1/2"	15	L	M22x1.5		88804221508	32,82
1/2"	18	L	M26x1.5		88804261808	41,95
5/8"	18	L	M26x1.5		88804261810	42,98
3/4"	18	L	M26x1.5	NEW	88804261812	65,64
3/4"	22	L	M30x2		88804302212	55,66
1"	28	L	M36x2		88804362816	93,50
1"1/4	35	L	M45x2		88804453520	150,94
1"1/2	42	L	M52x2		88804524224	192,65
1/4"	8	S	M16x1.5		88804160804	24,83
1/4"	10	S	M18x1.5		88804181004	24,59
1/4"	12	S	M20x1.5	NEW	88804201204	42,60
3/8"	12	S	M20x1.5		88804201206	30,28
1/2"	12	S	M20x1.5	NEW	88804201208	37,21
3/8"	16	S	M24x1,5		88804241606	38,72
1/2"	16	S	M24x1.5		88804241608	32,61
5/8"	20	S	M30x2		88804302010	46,07
3/4"	20	S	M30x2		88804302012	67,28
3/4"	25	S	M36x2		88804362512	74,79
1"	25	S	M36x2		88804362516	105,17
1"	30	S	M42x2		88804423016	114,27
1"1/4	38	S	M52x2		88804523820	184,70
1"1/4	42	L	M52x2	NEW	88804524220	198,32

Hembras giratorias 90° una sola pieza Métricas cono 24° - DKO 90°

One piece Metric female cone 24° (90° Elbow)

Coude 90° femelle pré-sertie Métrique cone 24°

Femmina 90° compatta Metrica sede 24°

DN	TUBO PIPE	SERIE SERIES	ROSCA THREAD		Referencia Part n°	€
1/4"	6	L	M12x1.5		88305120604	33,79
1/4"	8	L	M14x1.5		88305140804	32,38
1/4"	10	L	M16x1.5		88305161004	36,09
5/16"	10	L	M16x1.5		88305161005	43,62
1/4"	12	L	M18x1.5	NEW	88305181204	45,41
3/8"	12	L	M18x1.5		88305181206	39,74
1/2"	15	L	M22x1.5		88305221508	47,05
5/8"	18	L	M26x1.5		88305261810	64,42
3/4"	22	L	M30x2		88305302212	80,52
1"	28	L	M36x2		88305362816	129,57
1"1/4	35	L	M45x2		88305453520	228,47
1"1/2	42	L	M52x2		88305524224	317,66
1/4"	8	S	M16x1.5		88305160804	37,00
1/4"	10	S	M18x1.5		88305181004	37,41
1/4"	12	S	M20x1.5	NEW	88305201204	46,39
5/16"	12	S	M20x1.5		88305201205	51,98
3/8"	12	S	M20x1.5		88305201206	44,96
1/2"	16	S	M24x1.5		88305241608	49,86
5/8"	20	S	M30x2		88305302010	74,20
3/4"	20	S	M30x2		88305302012	83,87
3/4"	25	S	M36x2		88305362512	104,20
1"	25	S	M36x2		88305362516	140,44
1"	30	S	M42x2		88305423016	165,49
1"1/4	38	S	M52x2		88305523820	280,75

Hembras giratorias 45° una sola pieza Métricas cono 24° - DKO 45°

One piece Metric female cone 24° (45° Elbow)

Coude 45° femelle pré-sertie Métrique cone 24°

Femmina 45° compatta Metrica sede 24°

DN	TUBO PIPE	SERIE	ROSCA THREAD		Referencia Part n°	€
1/4"	6	L	M12x1.5		88306120604	33,79
1/4"	8	L	M14x1.5		88306140804	32,38
1/4"	10	L	M16x1.5		88306161004	36,09
5/16"	10	L	M16x1.5		88306161005	43,62
3/8"	10	L	M16x1.5		88306161006	42,40
3/8"	12	L	M18x1.5		88306181206	39,96
1/2"	15	L	M22x1.5		88306221508	45,87
1/2"	18	L	M26x1.5		88306261808	65,74
5/8"	18	L	M26x1.5		88306261810	64,88
3/4"	22	L	M30x2		88306302212	80,52
1"	28	L	M36x2		88306362816	129,57
1"1/4	35	L	M45x2		88306453520	212,01
1"1/2	42	L	M52x2		88306524224	316,33
1/4"	8	S	M16x1.5		88306160804	37,00
1/4"	10	S	M18x1.5		88306181004	37,41
1/4"	12	S	M20x1.5	NEW	88306201204	46,39
3/8"	10	S	M18x1.5	NEW	88306181006	69,53
3/8"	12	S	M20x1.5		88306201206	42,33
3/8"	14	S	M22x1.5	NEW	88306221406	53,51
1/2"	16	S	M24x1.5		88306241608	46,66
5/8"	20	S	M30x2		88306302010	74,20
3/4"	20	S	M30x2		88306302012	83,87
3/4"	25	S	M36x2		88306362512	104,20
1"	25	S	M36x2		88306362516	140,44
1"	30	S	M42x2		88306423016	164,37
1"1/4	38	S	M52x2		88306523820	280,75

Machos una sola pieza rosca Métrica cono 24°

One piece Metric male cone 24°

Mâle pré-serti Métrique cone 24°

Maschio compatto Metrico sede 24°

DN	TUBO PIPE	SERIE	ROSCA THREAD		Referencia Part n°	€
1/4"	6	L	M12x1.5		88203120604	31,71
1/4"	8	L	M14x1.5		88203140804	25,35
5/16"	10	L	M16x1.5		88203161005	35,79
3/8"	10	L	M16x1.5		88203161006	34,01
3/8"	12	L	M18x1.5		88203181206	25,92
1/2"	15	L	M22x1.5		88203221508	32,85
1/2"	18	L	M26x1.5	NEW	88203261808	43,59
5/8"	18	L	M26x1.5		88203261810	45,16
3/4"	22	L	M30x2		88203302212	60,64
1"	28	L	M36x2		88203362816	94,85
1"1/4	35	L	M45x2		88203453520	154,77
1"1/2	42	L	M52x2		88203524224	217,67
1/4"	8	S	M16x1.5		88203160804	31,03
1/4"	10	S	M18x1.5		88203181004	35,52
3/8"	12	S	M20x1.5		88203201206	36,78
1/2"	16	S	M24x1.5		88203241608	35,88
5/8"	20	S	M30x2		88203302010	55,79
3/4"	20	S	M30x2		88203302012	64,36
1"	25	S	M36x2		88203362516	113,38
1"	30	S	M42x2		88203423016	127,99
1"1/4	38	S	M52x2		88203523820	201,42

CONEXIONES UNA SOLA PIEZA SERIE 43 R1AT/R2AT/1SN/2SN/R16/2SC/R17

One piece fittings 43 Series R1AT/R2AT/1SN/2SN/R16/2SC/R17
Embouts pré-sertis R1AT/R2AT/1SN/2SN/R16/2SC/R17 Série 43
Raccordi compatti R1AT/R2AT/1SN/2SN/R16/2SC/R17 Serie 43

Hembras giratorias rectas una sola pieza rosca BSP cono 60°

One piece BSP female 60° cone

Femelle pré-sertie BSP cone 60°

Femmina diritta compatta BSP sede 60°

DN	ROSCA THREAD	Referencia Part n°	€
1/4"	1/4" BSP	881000404	21,14
1/4"	3/8" BSP	881000604	25,95
5/16"	3/8" BSP	881000605	28,51
3/8"	3/8" BSP	881000606	26,46
1/2"	3/8" BSP	881000608	29,72
3/8"	1/2" BSP	881000806	30,62
1/2"	1/2" BSP	881000808	29,95
5/8"	1/2" BSP	881000810	43,74
5/8"	5/8" BSP	881001010	48,94
1/2"	3/4" BSP	881001208	42,89
5/8"	3/4" BSP	881001210	43,39
3/4"	3/4" BSP	881001212	49,86
3/4"	1" BSP	881001612	66,35
1"	1" BSP	881001616	82,44
1"1/4	1"1/4 BSP	881002020	151,93
1"1/2	1"1/2 BSP	881002424	181,70
2"	2" BSP	881003232	297,21

Hembras giratorias 90° una sola pieza rosca BSP cono 60°

One piece BSP female cone 60° (90° Elbow)

Coude 90° femelle pré-sertie BSP cone 60°

Femmina 90° compatta BSP sede 60°

DN	ROSCA THREAD		Referencia Part n°	€
1/4"	1/4" BSP		881070404	30,74
1/4"	3/8" BSP	NEW	881070604	39,25
3/8"	3/8" BSP		881070606	36,30
1/2"	3/8" BSP		881070608	67,29
3/8"	1/2" BSP		881070806	51,76
1/2"	1/2" BSP		881070808	43,23
5/8"	5/8" BSP		881071010	70,24
5/8"	3/4" BSP		881071210	73,79
3/4"	3/4" BSP		881071212	72,68
3/4"	1" BSP		881071612	95,86
1"	1" BSP		881071616	114,46
1"1/4	1"1/4 BSP		881072020	217,82
1"1/2	1"1/2 BSP		881072424	283,21
2"	2" BSP		881073232	495,18

Hembras giratorias 45° una sola pieza rosca BSP cono 60°

One piece BSP female cone 60° (45° Elbow)

Coude 45° femelle pré-sertie BSP cone 60°

Femmina 45° compatta BSP sede 60°

DN	ROSCA THREAD		Referencia Part n°	€
1/4"	1/4" BSP		881080404	30,75
3/8"	3/8" BSP		881080606	36,98
3/8"	1/2" BSP	NEW	881080806	48,01
1/2"	1/2" BSP		881080808	43,23
3/4"	3/4" BSP		881081212	72,68
1"	1" BSP		881081616	114,46
1"1/4	1"1/4 BSP		881082020	204,45
1"1/2	1"1/2 BSP		881082424	283,21
2"	2" BSP		881083232	495,18

Machos una sola pieza rosca cilíndrica BSP cono 60°

One piece BSP male 60° cone

Mâle pré-serti BSP cone 60°

Maschio compatto cilindrico BSP sede 60°

DN	ROSCA THREAD	Referencia Part n°	€
1/4"	1/4" BSP	881120404	24,97
3/8"	3/8" BSP	881120606	28,23
3/8"	1/2" BSP	881120806	35,22
1/2"	1/2" BSP	881120808	33,42
3/4"	3/4" BSP	881121212	53,43
3/4"	1" BSP	881121612	81,36
1"	1" BSP	881121616	98,65
1"1/4	1"1/4 BSP	881122020	166,54
1"1/2	1"1/2 BSP	881122424	202,28
2"	2" BSP	881123232	311,15

Hembras giratorias rectas una sola pieza rosca BSP cono 60° doble hexagonal

One piece double hexagonal BSP female 60° cone

Femelle pré-sertie BSP cone 60° double hexagonal

Femmina diritta compatta BSP sede 60° doppio esagono

DN	ROSCA THREAD	Referencia Part n°	€
1/4"	1/4" BSP	884000404	32,82
5/16"	3/8" BSP	884000605	40,54
3/8"	3/8" BSP	884000606	36,66
1/2"	1/2" BSP	884000808	39,82
3/4"	3/4" BSP	884001212	66,00
1"	1" BSP	884001616	107,93
1"1/4	1"1/4 BSP	884002020	162,48
1"1/2	1"1/2 BSP	884002424	226,81
2"	2" BSP	884003232	368,17

Hembras giratorias rectas compactas rosca BSP asiento plano

One piece BSP female flat seat

Femelle pré-sertie BSP fond plat

Femmina diritta compatta BSP sede piana

DN	ROSCA THREAD	Referencia Part n°	€
1/4"	1/4" BSP	882000404	25,01
3/8"	3/8" BSP	882000606	27,91
1/2"	1/2" BSP	882000808	34,35
3/4"	3/4" BSP	882001212	55,25
1"	1" BSP	882001616	85,61

CONEXIONES UNA SOLA PIEZA SERIE BWS 3SP/4SP/R12/4SH NO PELAR

One piece fittings BWS Series 3SP/4SP/R12/4SH No Skive
Embouts pré-sertis Série BWS 3SP/4SP/R12/4SH Sans dénuder
Raccordi Compatti Serie BWS 3SP/4SP/R12/4SH senza spellatura

R13 & R15 Ø 3/4" - 1"

Machos una sola pieza rosca JIC 37°

NEW

One piece JIC 37° male

Mâle pré-serti JIC 37°

Maschio compatto JIC sede 37°

DN	ROSCA THREAD	Referencia Part n°	€
3/8"	9/16" 18h UNF	Z581400906	41,43
1/2"	3/4" 16h UNF	Z581401208	41,68
5/8"	7/8" 14h UNF	Z581401410	51,55
3/4"	1"1/16 12h UN	Z581401712	65,64
1"	1"5/16 12h UN	Z581402116	108,57
1"1/4	1"5/8 12h UN	Z581402620	181,51
1"1/2	1"7/8 12 UN	Z581403024	224,61
2"	2"1/2 12h UN	Z581404032	432,58

Hembras giratorias 45° una sola pieza JIC 37°

NEW

One piece JIC 37° Swivel female (45° Elbow)

Coude 45° femelle pré-sertie JIC 37°

Femmina 45° compatta JIC 37°

DN	ROSCA THREAD	Referencia Part n°	€
3/8"	9/16" 18h UNF	Z581390906	47,09
1/2"	3/4" 16h UNF	Z581391208	48,91
5/8"	7/8" 14h UNF	Z581391410	71,24
3/4"	1"1/16 12h UN	Z581391712	84,57
1"	1"5/16 12h UN	Z581392116	134,81
1"1/4	1"5/8 12h UN	Z581392620	235,78
1"1/2	1"7/8 12 UN	Z581393024	341,27
2"	2"1/2 12h UN	Z581394032	699,68 NEW

Hembras giratorias rectas una sola pieza JIC 37°

NEW

One piece JIC 37° Swivel female

Femelle pré-sertie JIC 37°

Femmina dirittta compatta JIC 37°

DN	ROSCA THREAD	Referencia Part n°	€
3/8"	9/16" 18h UNF	Z581420906	31,20
1/2"	3/4" 16h UNF	Z581421208	35,68
5/8"	7/8" 14h UNF	Z581421410	45,76
3/4"	1"1/16 12h UN	Z581421712	56,64
1"	1"5/16 12h UN	Z581422116	95,30
1"1/4	1"5/8 12h UN	Z581422620	170,22
1"1/2	1"7/8 12 UN	Z581423024	220,72
2"	2"1/2 12h UN	Z581424032	381,21

Hembras giratorias rectas una sola pieza JIC 37° doble hexagonal

One piece double hexagonal JIC 37° Swivel female

Femelle pré-sertie JIC 37° double hexagonal

Femmina diritta JIC 37° doppio esagono

DN	ROSCA THREAD	Referencia Part n°	€
3/8"	9/16" 18h UNF	Z582420906	35,80
1/2"	3/4" 16h UNF	Z582421208	38,47
1/2"	7/8" 14h UNF	Z582421408	51,12
5/8"	7/8" 14h UNF	Z582421410	60,32
3/4"	1"1/16 12h UN	Z582421712	67,48
1"	1"1/16 12h UN	Z582421716	113,94
1"	1"5/16 12h UN	Z582422116	108,56
1"1/4	1"5/8 12h UN	Z582422620	207,46
1"1/2	1"7/8 12 UN	Z582423024	262,24
2"	2"1/2 12h UN	Z582424032	455,04

Hembras giratorias 90° una sola pieza JIC 37°

NEW

One piece JIC 37° Swivel female (90° Elbow)

Coude 90° femelle pré-sertie JIC 37°

Femmina 90° compatta JIC 37°

DN	ROSCA THREAD	Referencia Part n°	€
3/8"	9/16" 18h UNF	Z581380906	45,36
1/2"	3/4" 16h UNF	Z581381208	51,79
5/8"	7/8" 14h UNF	Z581381410	67,75
3/4"	1"1/16 12h UN	Z581381712	84,58
1"	1"5/16 12h UN	Z581382116	134,81
1"1/4	1"5/8 12h UN	Z581382620	235,78
1"1/2	1"7/8 12 UN	Z581383024	355,65
2"	2"1/2 12h UN	Z581384032	699,68

CONEXIONES UNA SOLA PIEZA SERIE BWS 3SP/4SP/R12/4SH NO PELAR

One piece fittings BWS Series 3SP/4SP/R12/4SH No Skive
Embouts pré-sertis Série BWS 3SP/4SP/R12/4SH Sans dénuder
Raccordi Compatti Serie BWS 3SP/4SP/R12/4SH senza spellatura

R13 & R15 Ø 3/4" - 1"

NEW

Hembras giratorias rectas una sola pieza ORFS doble hexagonal

One piece double hexagonal ORFS Swivel female

Femelle pré-sertie ORFS double hexagonal

Femmina diritta compatta ORFS doppio esagono

DN	ROSCA THREAD	Referencia Part n°	€
3/8"	11/16" 16h UN	**Z589001106**	**54,81**
1/2"	13/16" 16h UN	**Z589001308**	**60,69**
5/8"	1" 14h UNS	**Z589001610**	**87,58**
3/4"	1"3/16 12h UN	**Z589001912**	**98,96**
1"	1"7/16 12h UN	**Z589002316**	**146,21**
1"1/4	1"11/16 12h UN	**Z589002720**	**270,16**
1"1/2	2" 12h UN	**Z589003224**	**317,41**

Hembras giratorias 45° una sola pieza ORFS

NEW

One piece ORFS Swivel female (45° Elbow)

Coude 45° femelle pré-sertie ORFS

Femmina 45° compatta ORFS

DN	ROSCA THREAD	Referencia Part n°	€
3/8"	11/16" 16h UN	**Z589081106**	**94,67**
1/2"	13/16" 16h UN	**Z589081308**	**107,99**
5/8"	1" 14h UNS	**Z589081610**	**149,59**
3/4"	1"3/16 12h UN	**Z589081912**	**174,25**
1"	1"7/16 12h UN	**Z589082316**	**260,22**
1"1/4	1"11/16 12h UN	**Z589082720**	**382,22**
1"1/2	2" 12h UN	**Z589083224**	**958,24**

Hembras giratorias 90° una sola pieza ORFS

NEW

One piece ORFS Swivel female (90° Elbow)

Coude 90° femelle pré-sertie ORFS

Femmina 90° compatta ORFS

DN	ROSCA THREAD	Referencia Part n°	€
3/8"	11/16" 16h UN	**Z589071106**	**94,67**
1/2"	13/16" 16h UN	**Z589071308**	**107,99**
5/8"	1" 14h UNS	**Z589071610**	**136,27**
3/4"	1"3/16 12h UN	**Z589071912**	**174,25**
1"	1"7/16 12h UN	**Z589072316**	**260,22**
1"1/4	1"11/16 12h UN	**Z589072720**	**382,22**
1"1/2	2" 12h UN	**Z589073224**	**958,24**

Machos una sola pieza ORFS

NEW

One piece ORFS male

Mâle pré-serti ORFS

Maschio compatto ORFS

DN	ROSCA THREAD	Referencia Part n°	€
3/8"	11/16" 16h UN	**Z589121106**	**55,78**
1/2"	13/16" 16h UN	**Z589121308**	**66,47**
5/8"	1" 14h UNS	**Z589121610**	**93,83**
3/4"	1"3/16 12h UN	**Z589121912**	**120,11**
1"	1"7/16 12h UN	**Z589122316**	**174,25**
1"1/4	1"11/16 12h UN	**Z589122720**	**258,66**
1"1/2	2" 12h UN	**Z589123224**	**360,27**

CONEXIONES UNA SOLA PIEZA SERIE BWS 3SP/4SP/R12/4SH NO PELAR

One piece fittings BWS Series 3SP/4SP/R12/4SH No Skive
Embouts pré-sertis Série BWS 3SP/4SP/R12/4SH Sans dénuder
Raccordi Compatti Serie BWS 3SP/4SP/R12/4SH senza spellatura

R13 & R15 Ø 3/4" - 1"

Hembras giratorias rectas una sola pieza NPSM cono 60° NEW

One piece NPSM Swivel female 60° cone

Femelle pré-sertie NPSM cone 60°

Femmina diritta compatta NPSM sede 60°

DN	ROSCA THREAD	Referencia Part n°	€
3/8"	3/8" NPSM	Z582610606	33,04
1/2"	1/2" NPSM	Z582610808	39,54
3/4"	3/4" NPSM	Z582611212	64,03
1"	1" NPSM	Z582611616	107,93
1"1/4	1"1/4 NPSM	Z582612020	184,43
1"1/2	1"1/2 NPSM	Z582612424	216,48
2"	2" NPSM	Z582613232	356,69

Hembras giratorias 90° una sola pieza rosca NPSM cono 60° NEW

One piece NPSM Swivel female 60° cone (90° Elbow)

Coude 90° femelle pré-sertie NPSM cone 60°

Femmina 90° compatta NPSM sede 60°

DN	ROSCA THREAD	Referencia Part n°	€
3/8"	3/8" NPSM	Z582620606	46,21
1/2"	1/2" NPSM	Z582620808	55,88
3/4"	3/4" NPSM	Z582621212	96,56
1"	1" NPSM	Z582621616	142,63

Hembras giratorias 45° una sola pieza rosca NPSM cono 60° NEW

One piece NPSM Swivel female 60° cone (45° Elbow)

Coude 45° femelle pré-sertie NPSM cone 60°

Femmina 45° compatta NPSM sede 60°

DN	ROSCA THREAD	Referencia Part n°	€
3/8"	3/8" NPSM	Z582630606	46,20
1/2"	1/2" NPSM	Z582630808	71,54
3/4"	3/4" NPSM	Z582631212	96,56
1"	1" NPSM	Z582631616	142,63

Machos una sola pieza rosca cónica NPT NEW

One piece NPT male pipe straight

Mâle pré-serti NPT

Maschio compatto conico NPT

DN	ROSCA THREAD	Referencia Part n°	€
3/8"	3/8" NPT	Z581610606	30,46
1/2"	1/2" NPT	Z581610808	37,17
3/4"	3/4" NPT	Z581611212	59,15
1"	1" NPT	Z581611616	99,08
1"1/4	1"1/4 NPT	Z581612020	178,01
1"1/2	1"1/2 NPT	Z581612424	210,13
2"	2" NPT	Z581613232	340,96

Hembras giratorias rectas una sola pieza rosca NPSM cono 60° doble hexagonal NEW

One piece double hexagonal NPSM Swivel female 60° cone

Femelle pré-sertie NPSM cone 60° double hexagonal

Femmina diritta compatta NPSM sede 60° doppio esagono

DN	ROSCA THREAD	Referencia Part n°	€
3/8"	3/8" NPSM	Z583610606	47,94
1/2"	1/2" NPSM	Z583610808	52,04
3/4"	3/4" NPSM	Z583611212	79,99
1"	1" NPSM	Z583611616	130,57

CONEXIONES UNA SOLA PIEZA SERIE BWS 3SP/4SP/R12/4SH NO PELAR

One piece fittings BWS Series 3SP/4SP/R12/4SH No Skive
Embouts pré-sertis Série BWS 3SP/4SP/R12/4SH Sans dénuder
Raccordi Compatti Serie BWS 3SP/4SP/R12/4SH senza spellatura

R13 & R15 Ø 3/4" - 1"

Bridas rectas una sola pieza SAE 3000 PSI

NEW

One piece 3000 PSI SAE Straight Flange / Code 61

Bride SAE droite pré-sertie série 3000 PSI

Flangia diritta compatta SAE 3000 PSI

DN	Ø	Referencia Part n°	€
1/2"	30.2	Z581820808	64,03
5/8"	38.1	Z581821210	88,58
3/4"	38.1	Z581821212	91,41
1"	44.5	Z581821612	126,13
1"	44.5	Z581821616	126,08
1"1/4	50.8	Z581822020	189,95
1"1/2	60.3	Z581822424	243,31
2"	71.4	Z581823232	386,60

Bridas 90° una sola pieza SAE 3000 PSI

NEW

One piece 3000 PSI SAE Flange (90° Elbow)/ Code 61

Bride SAE coude 90° pré-sertie série 3000 PSI

Flangia 90° compatta SAE 3000 PSI

DN	Ø	Referencia Part n°	€
1/2"	30.2	Z581830808	87,06
5/8"	38.1	Z581831210	127,96
3/4"	38.1	Z581831212	125,10
1"	44.5	Z581831616	173,09
1"1/4	50.8	Z581832020	270,56
1"1/4	60.3	Z581832420	380,54
1"1/2	60.3	Z581832424	366,23
2"	71.4	Z581833232	544,64

Bridas 45° una sola pieza SAE 3000 PSI

NEW

One piece 3000 PSI SAE Flange (45° Elbow)/ Code 61

Bride SAE coude 45° pré-sertie série 3000 PSI

Flangia 45° compatta SAE 3000 PSI

DN	Ø	Referencia Part n°	€
1/2"	30.2	Z581840808	87,06
5/8"	38.1	Z581841210	127,96
3/4"	38.1	Z581841212	125,10
1"	44.5	Z581841616	173,09
1"1/4	50.8	Z581842020	270,56
1"1/2	60.3	Z581842424	366,23
2"	71.4	Z581843232	544,64

Bridas rectas una sola pieza SAE 6000 PSI

NEW

One piece 6000 PSI SAE Straight Flange / Code 62

Bride SAE droite pré-sertie série 6000 PSI

Flangia diritta compatta SAE 6000 PSI

DN	Ø	Referencia Part n°	€
1/2"	31.8	Z582820808	72,38
5/8"	41.3	Z582821210	116,19
3/4"	41.3	Z582821212	104,56
1"	47.6	Z582821616	145,27
1"1/4	54.0	Z582822020	218,67
1"1/2	63.5	Z582822424	283,01
2"	79.4	Z582823232	464,68

Bridas 90° una sola pieza SAE 6000 PSI

NEW

One piece 6000 PSI SAE Flange (90° Elbow)/ Code 62

Bride SAE coude 90° pré-sertie série 6000 PSI

Flangia 90° compatta SAE 6000 PSI

DN	Ø	Referencia Part n°	€
1/2"	31.8	Z582830808	87,31
5/8"	41.3	Z582831210	141,47
3/4"	41.3	Z582831212	132,79
1"	47.6	Z582831616	199,75
1"1/4	54.0	Z582832020	280,82
1"1/2	63.5	Z582832424	450,77
2"	79.4	Z582833232	570,92

Bridas 45° una sola pieza SAE 6000 PSI

NEW

One piece 6000 PSI SAE Flange (45° Elbow)/ Code 62

Bride SAE coude 45° pré-sertie série 6000 PSI

Flangia 45° compatta SAE 6000 PSI

DN	Ø	Referencia Part n°	€
1/2"	31.8	Z582840808	87,31
5/8"	41.3	Z582841210	141,47
3/4"	41.3	Z582841212	132,88
1"	47.6	Z582841616	199,75
1"1/4	54.0	Z582842020	279,37
1"1/2	63.5	Z582842424	449,87
2"	79.4	Z582843232	570,92

CONEXIONES UNA SOLA PIEZA SERIE BWS 3SP/4SP/R12/4SH NO PELAR

One piece fittings BWS Series 3SP/4SP/R12/4SH No Skive
Embouts pré-sertis Série BWS 3SP/4SP/R12/4SH Sans dénuder
Raccordi Compatti Serie BWS 3SP/4SP/R12/4SH senza spellatura

R13 & R15 Ø 3/4" - 1"

Hembras giratorias rectas una sola pieza rosca Métrica cono 24° - DKO NEW

One piece Metric female cone 24°

Femelle pré-sertie Métrique cone 24°

Femmina diritta compatta Metrica sede 24°

DN	TUBO	SERIE	ROSCA THREAD	Referencia Part n°	€
3/8"	10	L	M16x1.5	Z58804161006	31,51
3/8"	12	L	M18x1.5	Z58804181206	30,54
3/8"	15	L	M22x1.5	Z58804221506	37,18
1/2"	15	L	M22x1.5	Z58804221508	37,03
1/2"	18	L	M26x1.5	Z58804261808	47,32
5/8"	18	L	M26x1.5	Z58804261810	48,49
3/4"	22	L	M30x2	Z58804302212	62,79
1"	28	L	M36x2	Z58804362816	105,48
1"1/4	35	L	M45x2	Z58804453520	170,28
1"1/2	42	L	M52x2	Z58804524224	217,33
3/8"	12	S	M20x1.5	Z58804201206	34,16
1/2"	16	S	M24x1.5	Z58804241608	36,79
5/8"	20	S	M30x2	Z58804302010	51,97
3/4"	20	S	M30x2	Z58804302012	75,90
3/4"	25	S	M36x2	Z58804362512	84,37
1"	30	S	M42x2	Z58804423016	128,90
1"1/4	38	S	M45x2	Z58804523820	208,36

Hembras giratorias 90° una sola pieza Métricas cono 24° - DKO 90° NEW

One piece Metric female cone 24° (90° Elbow)

Coude 90° femelle pré-sertie Métrique cone 24°

Femmina 90° compatta Metrica sede 24°

DN	TUBO	ROSCA	SERIE SERIES	Referencia Part n°	€
3/8"	10	M16x1.5	L	Z58305161006	47,17
3/8"	12	M18x1.5	L	Z58305181206	44,83
1/2"	15	M22x1.5	L	Z58305221508	53,07
5/8"	18	M26x1.5	L	Z58305261810	72,68
3/4"	22	M30x2	L	Z58305302212	90,84
1"	28	M36x2	L	Z58305362816	146,17
1"1/4	35	M45x2	L	Z58305453520	257,73
1"1/2	42	M52x2	L	Z58305524224	358,35
3/8"	12	M20x1.5	S	Z58305201206	50,71
1/2"	16	M24x1.5	S	Z58305241608	56,25
5/8"	20	M30x2	S	Z58305302010	83,71
3/4"	20	M30x2	S	Z58305302012	94,62
3/4"	25	M36x2	S	Z58305362512	117,55
1"	30	M42x2	S	Z58305423016	186,69
1"1/4	38	M45x2	S	Z58305523820	316,71

Hembras giratorias 45° una sola pieza Métricas cono 24° - DKO 45° NEW

One piece Metric female cone 24° (45° Elbow)

Coude 45° femelle pré-sertie Métrique cone 24°

Femmina 45° compatta Metrica sede 24°

DN	TUBO PIPE	SERIE	ROSCA THREAD	Referencia Part n°	€
3/8"	10	L	M16x1.5	Z58306161006	47,83
3/8"	12	L	M18x1.5	Z58306181206	45,08
1/2"	15	L	M22x1.5	Z58306221508	51,74
5/8"	18	L	M26x1.5	Z58306261810	73,20
3/4"	22	L	M30x2	Z58306302212	90,84
1"	28	L	M36x2	Z58306362816	146,17
1"1/4	35	L	M45x2	Z58306453520	239,17
1"1/2	42	L	M52x2	Z58306524224	356,85
3/8"	12	S	M20x1.5	Z58306201206	47,75
1/2"	16	S	M24x1.5	Z58306241608	52,64
5/8"	20	S	M30x2	Z58306302010	83,71
3/4"	20	S	M30x2	Z58306302012	94,62
3/4"	25	S	M36x2	Z58306362512	117,55
1"	30	S	M42x2	Z58306423016	185,43
1"1/4	38	S	M45x2	Z58306523820	316,71

Machos una sola pieza rosca Métrica cono 24° NEW

One piece Metric male cone 24°

Mâle pré-serti Métrique cone 24°

Maschio compatto Metrico sede 24°

DN	TUBO PIPE	SERIE	ROSCA THREAD	Referencia Part n°	€
3/8"	10	L	M16x1.5	Z58203161006	38,37
3/8"	12	L	M18x1.5	Z58203181206	29,24
3/8"	15	L	M22x1.5	Z58203221506	41,65
1/2"	15	L	M22x1.5	Z58203221508	37,06
1/2"	18	L	M26x1.5	Z58203261808	49,17
5/8"	18	L	M26x1.5	Z58203261810	50,94
3/4"	22	L	M30x2	Z58203302212	68,41
1"	28	L	M36x2	Z58203362816	107,00
1"1/4	35	L	M45x2	Z58203453520	174,60
1"1/2	42	L	M52x2	Z58203524224	245,55
3/8"	12	S	M20x1.5	Z58203201206	41,49
1/2"	16	S	M24x1.5	Z58203241608	40,47
5/8"	20	S	M30x2	Z58203302010	62,93
3/4"	20	S	M30x2	Z58203302012	72,60
3/4"	25	S	M36x2	Z58203362512	90,77
1"	30	S	M42x2	Z58203423016	144,39
1"1/4	38	S	M45x2	Z58203523820	227,22

CONEXIONES UNA SOLA PIEZA SERIE BWS 3SP/4SP/R12/4SH NO PELAR

One piece fittings BWS Series 3SP/4SP/R12/4SH No Skive
Embouts pré-sertis Série BWS 3SP/4SP/R12/4SH Sans dénuder
Raccordi Compatti Serie BWS 3SP/4SP/R12/4SH senza spellatura

R13 & R15 Ø 3/4" - 1"

Hembras giratorias rectas una sola pieza BSP C/J cono 60° NEW

One piece BSP female 60° cone 60° w/o´ring

Femelle pré-sertie BSP cone 60° avec joint

Femmina diritta compatta BSP sede 60°con o´ring

DN MANGUERA DN HOSE	ROSCA THREAD	Referencia Part n°	€
3/8"	3/8" BSP	Z581100606	32,69
1/2"	1/2" BSP	Z581100808	36,58
3/4"	3/4" BSP	Z581101212	56,63
1"	1" BSP	Z581101616	100,79
1"1/4	1"1/4 BSP	Z581102020	173,01
1"1/2	1"1/2 BSP	Z581102424	222,45
2"	2" BSP	Z581103232	376,67

Hembras giratorias 90° una sola pieza BSP C/J cono 60° NEW

One piece BSP female cone 60° w/o´ring (90° Elbow)

Coude 90° femelle pré-sertie BSP cone 60° avec joint

Femmina 90° compatta BSP sede 60°con o´ring

DN	R1	Referencia Part n°	€
3/8"	3/8" BSP	Z581170606	53,07
1/2"	1/2" BSP	Z581170808	58,88
3/4"	3/4" BSP	Z581171212	88,57
1"	1" BSP	Z581171616	145,10
1"1/4	1"1/4 BSP	Z581172020	267,48
1"1/2	1"1/2 BSP	Z581172424	351,22
2"	2" BSP	Z581173232	648,70

Hembras giratorias 45° una sola pieza BSP C/J cono 60° NEW

One piece BSP female cone 60° w/o´ring (45° Elbow)

Coude 45° femelle pré-sertie BSP cone 60° avec joint

Femmina 45° compatta BSP sede 60°con o´ring

DN	R1	Referencia Part n°	€
3/8"	3/8" BSP	Z581180606	53,07
1/2"	1/2" BSP	Z581180808	58,88
3/4"	3/4" BSP	Z581181212	88,57
1"	1" BSP	Z581181616	145,10
1"1/4	1"1/4 BSP	Z581182020	267,48
1"1/2	1"1/2 BSP	Z581182424	351,22
2"	2" BSP	Z581183232	648,70

Machos una sola pieza rosca cilíndrica BSP cono 60° NEW

One piece BSP male 60° cone

Mâle pré-serti BSP cone 60°

Maschio compatto cilindrico BSP sede 60°

DN	ROSCA THREAD	Referencia Part n°	€
3/8"	3/8" BSP	Z581120606	31,85
1/2"	1/2" BSP	Z581120808	37,70
5/8"	5/8" BSP	Z581121010	61,03
3/4"	3/4" BSP	Z581121212	60,28
1"	1" BSP	Z581121616	109,15
1"1/4	1"1/4 BSP	Z581122020	187,87
1"1/2	1"1/2 BSP	Z581122424	228,19
2"	2" BSP	Z581123232	351,01

Hembras giratorias rectas una sola pieza BSP cono 60° doble hexagonal NEW

One piece double hexagonal BSP female 60° cone

Femelle pré-sertie BSP cone 60° double hexagonal

Femmina diritta compatta BSP sede 60° doppio esagono

DN	ROSCA THREAD	Referencia Part n°	€
3/8"	3/8" BSP	Z584000606	41,36
1/2"	1/2" BSP	Z584000808	44,92
3/4"	3/4" BSP	Z584001212	74,46
1"	1" BSP	Z584001616	121,75
1"1/4	1"1/4 BSP	Z584002020	183,29
1"1/2	1"1/2 BSP	Z584002424	255,87
2"	2" BSP	Z584003232	415,33

Hembras giratorias rectas una sola pieza BSP asiento plano NEW

One piece BSP female flat seat

Femelle pré-sertie BSP fond plat

Femmina diritta compatta BSP sede piana

DN	ROSCA THREAD	Referencia Part n°	€
3/8"	3/8" BSP	Z582000606	31,49
1/2"	1/2" BSP	Z582000808	35,62
3/4"	3/4" BSP	Z582001212	57,01
1"	1" BSP	Z582001616	96,57
1"1/4	1"1/4 BSP	Z582002020	174,79
1"1/2	1"1/2 BSP	Z582002424	212,74
2"	2" BSP	Z582003232	354,15

CONEXIONES UNA SOLA PIEZA R7/ R8/ ELASTÓMERO MALLA METÁLICA

One piece fittings R7/R8 & Elastomer Braid of steel wire
Embouts pré-sertis R7/R8 et Elastomère tresse métallique
Raccordi compatti serie R7/R8 e elastomero treccia metallica

Hembras giratorias rectas una sola pieza rosca JIC 37°

One piece JIC 37° female

Femelle pré-sertie JIC 37°

Femmina dirittta compatta JIC 37°

DN	ROSCA THREAD	Referencia Part n°	€
3/16"	7/16" 20h UNF	**871420703**	**22,42**
1/4"	7/16" 20h UNF	**871420704**	**20,68**
1/4"	9/16" 18h UNF	**871420904**	**23,39**
5/16"	9/16" 18h UNF	**871420905**	**23,54**
3/8"	9/16" 18h UNF	**871420906**	**24,25**
1/2"	3/4" 16h UNF	**871421208**	**28,95**
1/2"	7/8" 14h UNF	**871421408**	**30,82**
3/4"	1"1/16 12h UN	**871421712**	**42,74**
1"	1"5/16 12h UN	**871422116**	**71,22**

Hembras giratorias 90° una sola pieza rosca JIC 37°

One piece JIC 37° female (90° Elbow)

90° Femelle pré-sertie JIC 37°

Femmina 90° compatta JIC 37°

DN	ROSCA THREAD		Referencia Part n°	€
3/16"	7/16" 20h UNF		**871380703**	**36,55**
1/4"	7/16" 20h UNF		**871380704**	**30,01**
1/4"	9/16" 18h UNF	NEW	**871380904**	**44,72**
3/8"	9/16" 18h UNF		**871380906**	**36,68**
1/2"	3/4" 16h UNF		**871381208**	**43,10**
3/4"	1"1/16 12h UN		**871381712**	**67,27**
1"	1"5/16 12h UN		**871382116**	**105,92**

Hembras giratorias 45° una sola pieza rosca JIC 37°

One piece JIC 37° female (45° Elbow)

45° Femelle pré-sertie JIC 37°

Femmina 45° compatta JIC 37°

DN	ROSCA THREAD	Referencia Part n°	€
1/4"	7/16" 20h UNF	**871390704**	**31,08**
3/8"	9/16" 18h UNF	**871390906**	**38,20**
1/2"	3/4" 16h UNF	**871391208**	**40,57**
3/4"	1"1/16 12h UN	**871391712**	**67,27**
1"	1"5/16 12h UN	**871392116**	**105,91**

Machos una sola pieza rosca JIC 37°

One piece JIC 37° male

Mâle pré-serti JIC 37°

Maschio compatto JIC sede 37°

DN	ROSCA THREAD	Referencia Part n°	€
1/4"	7/16" 20h UNF	**871400704**	**27,20**
3/8"	9/16" 18h UNF	**871400906**	**33,23**
1/2"	3/4" 16h UNF	**871401208**	**34,23**
3/4"	1"1/16 12h UN	**871401712**	**50,65**
1"	1"5/16 12h UN	**871402116**	**82,87**

Hembras giratorias rectas una sola pieza rosca JIC 37° doble hexagonal

One piece double hexagonal JIC 37° female

Femelle pré-sertie JIC 37° double hexagonal

Femmina diritta JIC 37° doppio esagono

DN	ROSCA THREAD		Referencia Part n°	€
3/16"	7/16" 20h UNF		**872420703**	**26,46**
1/4"	7/16" 20h UNF		**872420704**	**25,11**
5/16"	7/16" 20h UNF		**872420705**	**37,00**
5/16"	9/16" 18h UNF	NEW	**872420905**	**37,46**
3/8"	9/16" 18h UNF		**872420906**	**28,29**
1/2"	3/4" 16h UNF		**872421208**	**31,40**
1/2"	7/8" 14h UNF		**872421408**	**44,92**
5/8"	1"1/16 12h UN	NEW	**872421710**	**59,53**
3/4"	1"1/16 12h UN		**872421712**	**52,26**
1"	1"5/16 12h UN		**872422116**	**82,87**

CONEXIONES UNA SOLA PIEZA R7/ R8/ ELASTÓMERO MALLA METÁLICA

One piece fittings R7/R8 & Elastomer Braid of steel wire
Embouts pré-sertis R7/R8 et Elastomère tresse métallique
Raccordi compatti serie R7/R8 e elastomero treccia metallica

Hembras giratorias rectas una sola pieza rosca ORFS doble hexagonal

One piece double hexagonal ORFS female

Femelle pré-sertie ORFS double hexagonal

Femmina diritta compatta ORFS

DN	ROSCA THREAD		Referencia Part n°	€
1/4"	9/16"-18h		**879000904**	**39,82**
3/8"	11/16"-16h		**879001106**	**45,94**
3/8"	13/16"-16h	NEW	**879001306**	**54,64**
1/2"	13/16"-16h		**879001308**	**51,85**
3/4"	1"3/16-12h		**879001912**	**105,00**
1"	1"7/16-12h		**879002316**	**115,93**

Hembras giratorias 90° una sola pieza rosca ORFS

One piece ORFS female (90° Elbow)

90° Femelle pré-sertie ORFS

Femmina 90° compatta ORFS

DN	ROSCA THREAD	Referencia Part n°	€
1/4"	9/16"-18h	**879070904**	**68,55**
3/8"	11/16"-16h	**879071106**	**82,01**
1/2"	13/16"-16h	**879071308**	**92,44**
3/4"	1"3/16-12h	**879071912**	**150,95**
1"	1"7/16-12h	**879072316**	**221,85**

Hembras giratorias 45° una sola pieza rosca ORFS

One piece ORFS female (45° Elbow)

45° Femelle pré-sertie ORFS

Femmina 45° compatta ORFS

DN	ROSCA THREAD	Referencia Part n°	€
1/4"	9/16"-18h	**879080904**	**68,55**
3/8"	11/16"-16h	**879081106**	**82,01**
1/2"	13/16"-16h	**879081308**	**92,44**
3/4"	1"3/16-12h	**879081912**	**150,95**
1"	1"7/16-12h	**879082316**	**221,85**

Machos compactos rosca ORFS

One piece ORFS male

Mâle pré-serti ORFS

Maschio compatto ORFS

DN	ROSCA THREAD	Referencia Part n°	€
1/4"	9/16"-18h	**879120904**	**46,25**
3/8"	11/16"-16h	**879121106**	**45,83**
1/2"	13/16"-16h	**879121308**	**55,99**
3/4"	1"3/16-12h	**879121912**	**98,47**
1"	1"7/16-12h	**879122316**	**143,23**

CONEXIONES UNA SOLA PIEZA R7/ R8/ ELASTÓMERO MALLA METÁLICA

One piece fittings R7/R8 & Elastomer Braid of steel wire
Embouts pré-sertis R7/R8 et Elastomère tresse métallique
Raccordi compatti serie R7/R8 e elastomero treccia metallica

Hembras giratorias rectas una sola pieza rosca NPSM cono 60°

One piece NPSM female 60° cone

Femelle pré-sertie NPSM cone 60°

Femmina diritta compatta NPSM sede 60°

DN	ROSCA THREAD	Referencia Part n°	€
1/4"	1/4" 18h NPSM	**872610404**	**23,60**
3/8"	3/8" 18h NPSM	**872610606**	**25,86**
1/2"	1/2" 14h NPSM	**872610808**	**32,34**
3/4"	3/4" 14h NPSM	**872611212**	**49,23**
1"	1" - 11 1/2 h NPSM	**872611616**	**82,32**

Hembras giratorias 90° una sola pieza rosca NPSM cono 60°

One piece NPSM female 60° cone (90° Elbow)

90° Femelle pré-sertie NPSM cone 60°

Femmina 90° compatta NPSM sede 60°

DN	ROSCA THREAD	Referencia Part n°	€
1/4"	1/4" 18h NPSM	**872620404**	**33,80**
3/8"	3/8" 18h NPSM	**872620606**	**37,42**
1/2"	1/2" 14h NPSM	**872620808**	**46,69**
3/4"	3/4" 14h NPSM	**872621212**	**77,79**
1"	1" - 11 1/2 h NPSM	**872621616**	**112,78**

Hembras giratorias 45° una sola pieza rosca NPSM cono 60°

One piece NPSM female 60° cone (45° Elbow)

45° Femelle pré-sertie NPSM cone 60°

Femmina 45° compatta NPSM sede 60°

DN	ROSCA THREAD	Referencia Part n°	€
1/4"	1/4" 18h NPSM	**872630404**	**33,80**
3/8"	3/8" 18h NPSM	**872630606**	**37,42**
1/2"	1/2" 14h NPSM	**872630808**	**60,44**
3/4"	3/4" 14h NPSM	**872631212**	**77,79**
1"	1" - 11 1/2 h NPSM	**872631616**	**112,78**

Machos una sola pieza rosca cónica NPT

One piece NPT male pipe straight

Mâle pré-serti NPT

Maschio compatto conico NPT

DN	ROSCA THREAD		Referencia Part n°	€
3/16"	1/4" NPT		**871610403**	**26,77**
1/4"	1/4" NPT		**871610404**	**21,38**
3/8"	1/4" NPT	NEW	**871610406**	**32,15**
1/4"	3/8" NPT	NEW	**871610604**	**30,11**
3/8"	3/8" NPT		**871610606**	**23,60**
1/2"	1/2" NPT		**871610808**	**30,26**
3/4"	3/4" NPT		**871611212**	**44,94**
1"	1" NPT		**871611616**	**74,55**

Hembras giratorias rectas una sola pieza rosca NPSM cono 60° doble hexagonal

One piece double hexagonal NPSM female 60° cone

Femelle pré-sertie NPSM cone 60° double hexagonal

Femmina diritta compatta NPSM sede 60° doppio esagono

DN	ROSCA THREAD	Referencia Part n°	€
1/4"	1/4" NPSM	**873610404**	**36,55**
3/8"	3/8" 18h NPSM	**873610606**	**38,95**
1/2"	1/2" 14h NPSM	**873610808**	**43,31**
3/4"	3/4" NPSM	**873611212**	**63,24**
1"	1" - 11 1/2 h NPSM	**873611616**	**102,19**

CONEXIONES UNA SOLA PIEZA R7/ R8/ ELASTÓMERO MALLA METÁLICA

One piece fittings R7/R8 & Elastomer Braid of steel wire
Embouts pré-sertis R7/R8 et Elastomère tresse métallique
Raccordi compatti serie R7/R8 e elastomero treccia metallica

Hembras giratorias rectas una sola pieza rosca Métrica cono 24° - DKO

One piece Metric female 24° cone

Femelle pré-sertie Métrique cone 24°

Femmina diritta compatta Metrica sede 24°

DN	TUBO PIPE	SERIE SERIES	ROSCA THREAD		Referencia Part n°	€
3/16"	6	L	M12x1.5	NEW	87804120603	22,44
1/4"	6	L	M12x1.5	NEW	87804120604	21,10
1/4"	8	L	M14x1.5		87804140804	20,22
3/8"	12	L	M18x1.5		87804181206	23,67
1/2"	15	L	M22x1.5		87804221508	30,14
3/4"	22	L	M30x2		87804302212	48,14
1"	28	L	M36x2		87804362816	80,16
1/4"	8	S	M16x1.5		87804160804	23,05
1/4"	10	S	M18x1.5		87804181004	22,80
3/8"	12	S	M20x1.5		87804201206	26,85
1/2"	16	S	M24x1.5		87804241608	29,93
3/4"	20	S	M30x2		87804302012	59,65
3/4"	25	S	M36x2		87804362512	67,09
1"	30	S	M42x2		87804423016	100,73

Hembras giratorias 90° una sola pieza Métricas cono 24° - DKO 90°

One piece Metric female 24° cone (90° Elbow)

90° Femelle pré-sertie Métrique cone 24°

Femmina 90° compatta Metrica sede 24°

DN	TUBO PIPE	SERIE SERIES	ROSCA THREAD	Referencia Part n°	€
1/4"	8	L	M14x1.5	87305140804	30,52
3/8"	12	L	M18x1.5	87305181206	36,21
1/2"	15	L	M22x1.5	87305221508	44,22
3/4"	22	L	M30x2	87305302212	72,77
1"	28	L	M36x2	87305362816	115,89
1/4"	8	S	M16x1.5	87305160804	35,10
1/4"	10	S	M18x1.5	87305181004	35,50
3/8"	12	S	M20x1.5	87305201206	41,38
1/2"	16	S	M24x1.5	87305241608	47,02
3/4"	25	S	M36x2	87305362512	96,22
1"	30	S	M42x2	87305423016	151,47

Hembras giratorias 45° una sola pieza Métricas cono 24° - DKO 45°

One piece Metric female 24° cone (45° Elbow)

45° Femelle pré-sertie Métrique cone 24°

Femmina 45° compatta Metrica sede 24°

DN	TUBO PIPE	SERIE SERIES	ROSCA THREAD		Referencia Part n°	€
1/4"	8	L	M14x1.5		87306140804	30,52
3/8"	10	L	M16x1.5	NEW	87306161006	38,85
3/8"	12	L	M18x1.5		87306181206	36,44
1/2"	15	L	M22x1.5		87306221508	43,06
3/4"	22	L	M30x2		87306302212	72,77
1"	28	L	M36x2		87306362816	115,89
1/4"	8	S	M16x1.5		87306160804	35,10
1/4"	10	S	M18x1.5		87306181004	35,51
3/8"	12	S	M20x1.5		87306201206	38,78
1/2"	16	S	M24x1.5		87306241608	43,84
3/4"	25	S	M36x2		87306362512	96,22
1"	30	S	M42x2		87306423016	150,36

Machos una sola pieza rosca Métrica cono 24°

One piece Metric male 24° cone

Mâle pré-serti Métrique cone 24°

Maschio compatto Metrico sede 24°

DN	TUBO PIPE	SERIE SERIES	ROSCA THREAD		Referencia Part n°	€
1/4"	8	L	M14x1.5		87203140804	23,56
3/8"	12	L	M18x1.5		87203181206	22,53
1/2"	15	L	M22x1.5		87203221508	30,16
3/4"	22	L	M30x2		87203302212	53,07
1"	28	L	M36x2		87203362816	81,50
1/4"	8	S	M16x1.5		87203160804	29,18
1/4"	10	S	M18x1.5	NEW	87203181004	33,64
3/8"	12	S	M20x1.5		87203201206	33,28
1/2"	16	S	M24x1.5		87203241608	33,16
3/4"	25	S	M36x2		87203362512	72,71
1"	30	S	M42x2		87203423016	114,33

CONEXIONES UNA SOLA PIEZA R7/ R8/ ELASTÓMERO MALLA METÁLICA

One piece fittings R7/R8 & Elastomer Braid of steel wire
Embouts pré-sertis R7/R8 et Elastomère tresse métallique
Raccordi compatti serie R7/R8 e elastomero treccia metallica

Hembras giratorias rectas una sola pieza rosca BSP cono 60°

One piece BSP female 60° cone

Femelle pré-sertie BSP cone 60°

Femmina diritta compatta BSP sede 60°

DN	ROSCA THREAD		Referencia Part n°	€
3/16"	1/4" BSP	NEW	871000403	20,88
1/4"	1/4" BSP		871000404	19,39
3/8"	3/8" BSP		871000606	23,06
1/2"	1/2" BSP		871000808	27,29
3/4"	3/4" BSP		871001212	42,39
1"	1" BSP		871001616	69,20

Hembras giratorias 90° una sola pieza rosca BSP cono 60°

One piece BSP female 60° cone (90° Elbow)

90° Femelle pré-sertie BSP cone 60°

Femmina 90° compatta BSP sede 60°

DN	ROSCA THREAD		Referencia Part n°	€
1/4"	1/4" BSP		871070404	28,90
1/4"	3/8" BSP	NEW	871070604	37,33
3/8"	3/8" BSP		871070606	32,81
1/2"	1/2" BSP		871070808	40,44
3/4"	3/4" BSP		871071212	65,00
1"	1" BSP		871071616	100,92

Hembras giratorias 45° una sola pieza rosca BSP cono 60°

One piece BSP female 60° cone (45° Elbow)

45° Femelle pré-sertie BSP cone 60°

Femmina 45° compatta BSP sede 60°

DN	ROSCA THREAD	Referencia Part n°	€
1/4"	1/4" BSP	871080404	28,90
3/8"	3/8" BSP	871080606	33,48
1/2"	1/2" BSP	871080808	40,45
3/4"	3/4" BSP	871081212	65,00
1"	1" BSP	871081616	100,92

Machos una sola pieza rosca cilíndrica BSP cono 60°

One piece BSP male 60° cone

Mâle pré-serti BSP cone 60°

Maschio compatto cilindrico BSP sede 60°

DN	ROSCA THREAD	Referencia Part n°	€
1/4"	1/4" BSP	871120404	23,18
3/8"	3/8" BSP	871120606	24,81
1/2"	1/2" BSP	871120808	30,73
3/4"	3/4" BSP	871121212	45,94
1"	1" BSP	871121616	83,74

Hembras giratorias rectas una sola pieza rosca BSP cono 60° doble hexagonal

One piece double hexagonal BSP female 60° cone

Femelle pré-sertie BSP cone 60° double hexagonal

Femmina diritta compatta BSP sede 60° doppio esagono

DN	ROSCA THREAD	Referencia Part n°	€
1/4"	1/4" BSP	874000404	30,95
3/8"	3/8" BSP	874000606	33,17
1/2"	1/2" BSP	874000808	37,06
3/4"	3/4" BSP	874001212	58,39
1"	1" BSP	874001616	94,45

CONEXIONES UNA SOLA PIEZA PTFE LISO / R14

One piece fittings for Smooth PTFE/ R14
Embouts pré-sertis pour PTFE lisse/ R14
Raccordi compatti per PTFE liscio/ R14

Hembras giratorias rectas una sola pieza rosca JIC 37°

One piece JIC 37° female

Femelle pré-sertie JIC 37°

Femmina dirittta compatta JIC 37°

DN	ROSCA THREAD		Referencia Part n°	€
1/4"	7/16" 20h UNF		861420704	18,74
3/16"	7/16" 20h UNF	NEW	861420703	22,82
1/4"	1/2" 20h UNF		861420804	19,97
5/16"	1/2" 20h UNF		861420805	23,15
5/16"	9/16" 18h UNF		861420905	22,14
3/8"	9/16" 18h UNF		861420906	21,99
3/8"	3/4" 16h UNF	NEW	861421206	24,97
1/2"	3/4" 16h UNF		861421208	26,25
3/4"	1"1/16 12h UN		861421712	39,50
1"	1"5/16 12h UN		861422116	65,78

Hembras giratorias 90° una sola pieza rosca JIC 37°

One piece JIC 37° female (90° Elbow)

90° Femelle pré-sertie JIC 37°

Femmina 90° compatta JIC 37°

DN	ROSCA THREAD		Referencia Part n°	€
3/16"	7/16" 20h UNF	NEW	861380703	36,94
1/4"	7/16" 20h UNF		861380704	28,08
5/16"	9/16" 18h UNF		861380905	36,20
3/8"	9/16" 18h UNF		861380906	34,42
1/2"	3/4" 16h UNF		861381208	40,39
1/2"	7/8" 14UNF	NEW	861381408	43,10
5/8"	7/8" 14UNF	NEW	861381410	59,16
3/4"	1"1/16 12h UN		861381712	64,02
1"	1"5/16 12h UN		861382116	100,48

Hembras giratorias 45° una sola pieza rosca JIC 37°

One piece JIC 37° female (45° Elbow)

45° Femelle pré-sertie JIC 37°

Femmina 45° compatta JIC 37°

DN	ROSCA THREAD		Referencia Part n°	€
1/4"	7/16" 20h UNF		861390704	29,15
5/16"	9/16" 18h UNF	NEW	861390905	36,21
3/8"	9/16" 18h UNF		861390906	35,94
1/2"	3/4" 16h UNF		861391208	37,87
3/4"	1"1/16 12h UN		861391712	64,02
1"	1"5/16 12h UN		861392116	100,47

Machos una sola pieza rosca JIC 37°

One piece JIC 37° male

Mâle pré-serti JIC 37°

Maschio compatto JIC sede 37°

DN	ROSCA THREAD		Referencia Part n°	€
1/4"	7/16" 20h UNF		861400704	25,26
3/8"	9/16" 18h UNF		861400906	30,98
1/2"	3/4" 16h UNF		861401208	31,52
5/8"	1"1/16 12h UN	NEW	861401710	52,75
3/4"	1"1/16 12h UN		861401712	47,40
1"	1"5/16 12h UN		861402116	77,43

Hembras giratorias rectas una sola pieza rosca JIC 37° doble hexagonal

One piece JIC 37° double hexagonal female

Femelle pré-sertie JIC 37° double hexagonal

Femmina diritta JIC 37° doppio esagono

DN	ROSCA THREAD		Referencia Part n°	€
3/16"	7/16" 20h UNF		862420703	26,86
1/4"	7/16" 20h UNF		862420704	23,17
1/4"	1/2" 20h UNF	NEW	862420804	28,74
5/16"	1/2" 20h UNF		862420805	36,37
5/16"	9/16" 18h UNF		862420905	36,05
3/8"	9/16" 18h UNF		862420906	26,03
3/8"	3/4" 16h UNF	NEW	862421206	32,09
1/2"	3/4" 16h UNF		862421208	28,70
5/8"	3/4" 16h UNF	NEW	862421210	45,19
1/2"	3/4" 16h UNF		862421408	41,85
5/8"	3/4" 16h UNF	NEW	862421410	52,64
1/2"	1"1/16 12h UN	NEW	862421708	47,67
5/8"	1"1/16 12h UN		862421710	57,00
3/4"	1"1/16 12h UN		862421712	49,01
1"	1"1/16 12h UN	NEW	862421716	82,15
3/4"	1"5/16 12h UN	NEW	862422112	68,66
1"	1"5/16 12h UN		862422116	77,41

CONEXIONES UNA SOLA PIEZA PTFE LISO / R14

One piece fittings for Smooth PTFE/ R14
Embouts pré-sertis pour PTFE lisse/ R14
Raccordi compatti per PTFE liscio/ R14

Hembras giratorias rectas una sola pieza rosca ORFS doble hexagonal

One piece doble hexagonal ORFS female

Femelle pré-sertie ORFS double hexagonal

Femmina diritta compatta ORFS

DN	ROSCA THREAD		Referencia Part n°	€
1/4"	9/16"-18h		869000904	37,89
5/16"	11/16"-16h	NEW	869001105	48,24
3/8"	11/16"-16h		869001106	44,13
1/2"	13/16"-16h		869001308	49,86
3/4"	1"3/16-12h		869001912	101,88
1"	1"7/16-12h		869002316	110,47

Machos una sola pieza rosca ORFS

One piece ORFS male

Mâle pré-serti ORFS

Maschio compatto ORFS

DN	ROSCA THREAD	Referencia Part n°	€
1/4"	9/16"-18h	869120904	44,31
3/8"	11/16"-16h	869121106	43,57
1/2"	13/16"-16h	869121308	53,29
3/4"	1"3/16-12h	869121912	95,22
1"	1"7/16-12h	869122316	139,69

Hembras giratorias 90° una sola pieza rosca ORFS

One piece ORFS female (90° Elbow)

90° Femelle pré-sertie ORFS

Femmina 90° compatta ORFS

DN	ROSCA THREAD	Referencia Part n°	€
1/4"	9/16"-18h	869070904	66,99
3/8"	11/16"-16h	869071106	80,20
1/2"	13/16"-16h	869071308	89,74
3/4"	1"3/16-12h	869071912	147,27
1"	1"7/16-12h	869072316	218,32

Hembras giratorias 45° una sola pieza rosca ORFS

One piece ORFS female (45° Elbow)

45° Femelle pré-sertie ORFS

Femmina 45° compatta ORFS

DN	ROSCA THREAD	Referencia Part n°	€
1/4"	9/16"-18h	869080904	66,99
3/8"	11/16"-16h	869081106	80,20
1/2"	13/16"-16h	869081308	89,74
3/4"	1"3/16-12h	869081912	147,27
1"	1"7/16-12h	869082316	218,32

CONEXIONES UNA SOLA PIEZA PTFE LISO / R14

One piece fittings for Smooth PTFE/ R14
Embouts pré-sertis pour PTFE lisse/ R14
Raccordi compatti per PTFE liscio/ R14

Hembras giratorias rectas una sola pieza rosca NPSM cono 60°

One piece NPSM female 60° cone

Femelle pré-sertie NPSM cone 60°´

Femmina diritta compatta NPSM sede 60°

DN	ROSCA THREAD	Referencia Part n°	€
1/4"	1/4" 18h NPSM	862610404	21,66
3/8"	3/8" 18h NPSM	862610606	23,61
1/2"	1/2" 14h NPSM	862610808	29,64
3/4"	3/4" 14h NPSM	862611212	45,99
1"	1" - 11 1/2 h NPSM	862611616	75,53

Hembras giratorias 90° una sola pieza rosca NPSM cono 60°

One piece NPSM female 60° cone (90° Elbow)

90° Femelle pré-sertie NPSM cone 60°

Femmina 90° compatta NPSM sede 60°

DN	ROSCA THREAD	Referencia Part n°	€
1/4"	1/4" 18h NPSM	862620404	31,87
3/8"	3/8" 18h NPSM	862620606	35,17
1/2"	1/2" 14h NPSM	862620808	43,99
3/4"	3/4" 14h NPSM	862621212	74,54
1"	1" - 11 1/2 h NPSM	862621616	106,00

Hembras giratorias 45° una sola pieza rosca NPSM cono 60°

One piece NPSM female 60° cone (45° Elbow)

45° Femelle pré-sertie NPSM cone 60°

Femmina 45° compatta NPSM sede 60°

DN	ROSCA THREAD	Referencia Part n°	€
1/4"	1/4" 18h NPSM	862630404	31,87
3/8"	3/8" 18h NPSM	862630606	35,16
1/2"	1/2" 14h NPSM	862630808	57,74
3/4"	3/4" 14h NPSM	862631212	74,55
1"	1" - 11 1/2 h NPSM	862631616	106,00

Machos una sola pieza rosca cónica NPT

One piece NPT male pipe

Mâle pré-serti NPT

Maschio compatto conico NPT

DN	ROSCA THREAD		Referencia Part n°	€
1/4"	1/8" NPT	NEW	861610204	26,30
3/16"	1/4" NPT	NEW	861610403	26,39
1/4"	1/4" NPT		861610404	19,44
5/16"	1/4" NPT	NEW	861610405	30,00
3/8"	1/4" NPT	NEW	861610406	29,90
1/4"	3/8" NPT	NEW	861610604	28,17
5/16"	3/8" NPT	NEW	861610605	32,68
3/8"	3/8" NPT		861610606	21,34
1/2"	1/2" NPT	NEW	861610608	34,94
3/8"	1/2" NPT	NEW	861610806	36,37
1/2"	1/2" NPT		861610808	27,56
5/8"	1/2" NPT	NEW	861610810	43,04
1/2"	3/4" NPT	NEW	861611208	46,74
5/8"	3/4" NPT	NEW	861611210	50,81
3/4"	3/4" NPT		861611212	41,70
3/4"	1" NPT	NEW	861611612	64,93
1"	1" NPT		861611616	67,76
1"	1" 1/4 NPT	NEW	861612016	110,44

Hembras giratorias rectas una sola pieza rosca NPSM cono 60° doble hexagonal

One piece double hexagonal NPSM female 60° cone

Femelle pré-sertie NPSM cone 60° double hexagonal

Femmina diritta compatta NPSM sede 60° doppio esagono

DN	ROSCA THREAD	Referencia Part n°	€
1/4"	1/4" NPSM	863610404	34,61
3/8"	3/8" 18h NPSM	863610606	36,69
1/2"	1/2" 14h NPSM	863610808	40,61
3/4"	3/4" NPSM	863611212	60,00
1"	1" - 11 1/2 h NPSM	863611616	96,75

CONEXIONES UNA SOLA PIEZA PTFE LISO / R14

One piece fittings for Smooth PTFE/ R14
Embouts pré-sertis pour PTFE lisse/ R14
Raccordi compatti per PTFE liscio/ R14

Hembras giratorias rectas una sola pieza rosca Métrica cono 24° - DKO

One piece Metric female 24° cone

Femelle pré-sertie Métrique cone 24°

Femmina diritta compatta Metrica sede 24°

DN	TUBO PIPE	SERIE SERIES	ROSCA THREAD	Referencia Part n°	€
1/4"	8	L	M14x1.5	**86804140804**	**18,28**
3/8"	12	L	M18x1.5	**86804181206**	**21,41**
1/2"	15	L	M22x1.5	**86804221508**	**27,44**
3/4"	22	L	M30x2	**86804302212**	**44,90**
1"	28	L	M36x2	**86804362816**	**73,38**
1/4"	8	S	M16x1.5	**86804160804**	**21,11**
3/8"	12	S	M20x1.5	**86804201206**	**24,59**
1/2"	16	S	M24x1.5	**86804241608**	**27,22**
3/4"	25	S	M36x2	**86804362512**	**63,84**
1"	30	S	M42x2	**86804423016**	**93,94**

Hembras giratorias 45° una sola pieza rosca Métrica cono 24° - DKO 45°

One piece Metric female 24° cone (45° Elbow)

45° Femelle pré-sertie Métrique cone 24°

Femmina 45° compatta Metrica sede 24°

DN	TUBO PIPE	ROSCA THREAD	SERIE SERIES	Referencia Part n°	€
1/4"	8	M14x1.5	L	**86306140804**	**28,59**
3/8"	12	M18x1.5	L	**86306181206**	**34,18**
1/2"	15	M22x1.5	L	**86306221508**	**40,35**
3/4"	22	M30x2	L	**86306302212**	**69,52**
1"	28	M36x2	L	**86306362816**	**109,11**
1/4"	8	M16x1.5	S	**86306160804**	**33,17**
3/8"	12	M20x1.5	S	**86306201206**	**36,52**
1/2"	16	M24x1.5	S	**86306241608**	**41,14**
3/4"	25	M36x2	S	**86306362512**	**92,98**
1"	30	M42x2	S	**86306423016**	**143,58**

Hembras giratorias 90° una sola pieza rosca Métrica cono 24° - DKO 90°

One piece Metric female 24° cone (90° Elbow)

90° Femelle pré-sertie Métrique cone 24°

Femmina 90° compatta Metrica sede 24°

DN	TUBO PIPE	SERIE SERIES	ROSCA THREAD	Referencia Part n°	€
1/4"	8	L	M14x1.5	**86305140804**	**28,59**
3/8"	12	L	M18x1.5	**86305181206**	**33,96**
1/2"	15	L	M22x1.5	**86305221508**	**41,52**
3/4"	22	L	M30x2	**86305302212**	**69,52**
1"	28	L	M36x2	**86305362816**	**109,11**
1/4"	8	S	M16x1.5	**86305160804**	**33,17**
3/8"	12	S	M20x1.5	**86305201206**	**39,12**
1/2"	16	S	M24x1.5	**86305241608**	**44,31**
3/4"	25	S	M36x2	**86305362512**	**92,98**
1"	30	S	M42x2	**86305423016**	**144,68**

Machos compactos rosca Métrica cono 24°

One piece Metric male 24° cone

Mâle pré-serti Métrique cone 24°

Maschio compatto Metrico sede 24°

DN	TUBO PIPE	SERIE SERIES	ROSCA THREAD	Referencia Part n°	€
1/4"	8	L	M14x1.5	**86203140804**	**21,62**
3/8"	12	L	M18x1.5	**86203181206**	**20,27**
1/2"	15	L	M22x1.5	**86203221508**	**27,46**
3/4"	22	L	M30x2	**86203302212**	**49,83**
1"	28	L	M36x2	**86203362816**	**75,69**
1/4"	8	S	M16x1.5	**86203160804**	**27,25**
3/8"	12	S	M20x1.5	**86203201206**	**31,03**
1/2"	16	S	M24x1.5	**86203241608**	**30,46**
3/4"	25	S	M36x2	**86203362512**	**69,46**
1"	30	S	M42x2	**86203423016**	**107,54**

CONEXIONES UNA SOLA PIEZA PTFE LISO / R14

One piece fittings for Smooth PTFE/ R14
Embouts pré-sertis pour PTFE lisse/ R14
Raccordi compatti per PTFE liscio/ R14

Hembras giratorias rectas una sola pieza rosca BSP cono 60°

One piece BSP female 60° cone

Femelle pré-sertie BSP cone 60°

Femmina diritta compatta BSP sede 60°

DN	ROSCA THREAD	Referencia Part n°	€
3/16"	1/4" BSP	861000403	21,28
1/4"	1/4" BSP	861000404	17,46
3/8"	3/8" BSP	861000606	20,80
1/2"	1/2" BSP	861000808	24,59
3/4"	3/4" BSP	861001212	39,15
1"	1" BSP	861001616	63,76

Hembras giratorias 90° una sola pieza rosca BSP cono 60°

One piece BSP female 60° cone (90° Elbow)

90° Femelle pré-sertie BSP cone 60°

Femmina 90° compatta BSP sede 60°

DN	ROSCA THREAD	Referencia Part n°	€
1/4"	1/4" BSP	861070404	26,97
3/8"	3/8" BSP	861070606	30,56
1/2"	1/2" BSP	861070808	37,74
3/4"	3/4" BSP	861071212	61,76
1"	1" BSP	861071616	94,61

Hembras giratorias 45° una sola pieza rosca BSP cono 60°

One piece BSP female 60° cone (45° Elbow)

45° Femelle pré-sertie BSP cone 60°

Femmina 45° compatta BSP sede 60°

DN	ROSCA THREAD	Referencia Part n°	€
1/4"	1/4" BSP	861080404	26,97
3/8"	3/8" BSP	861080606	31,22
1/2"	1/2" BSP	861080808	37,74
3/4"	3/4" BSP	861081212	61,75
1"	1" BSP	861081616	94,61

Machos una sola pieza rosca cilíndrica BSP cono 60°

One piece BSP male 60° cone

Mâle pré-serti BSP cone 60°

Maschio compatto cilindrico BSP sede 60°

DN	ROSCA THREAD	Referencia Part n°	€
1/4"	1/4" BSP	861120404	21,25
3/8"	3/8" BSP	861120606	22,56
1/2"	1/2" BSP	861120808	28,03
3/4"	3/4" BSP	861121212	42,69
1"	1" BSP	861121616	80,20

Hembras giratorias rectas una sola pieza rosca BSP cono 60° doble hexagonal

One piece double hexagonal BSP female 60° cone

Femelle pré-sertie BSP cone 60° double hexagonal

Femmina diritta compatta BSP sede 60° doppio esagono

DN	ROSCA THREAD	Referencia Part n°	€
1/4"	1/4" BSP	864000404	29,02
3/8"	3/8" BSP	864000606	30,91
1/2"	1/2" BSP	864000808	34,36
3/4"	3/4" BSP	864001212	55,14
1"	1" BSP	864001616	89,01

CONEXIONES UNA SOLA PIEZA PTFE CORRUGADO

One piece fittings for convoluted PTFE
Embouts pré-sertis pour PTFE convoluté
Raccordi compatti per PTFE corrugato

Hembras giratorias rectas una sola pieza rosca JIC 37°

One piece JIC 37° female

Femelle pré-sertie JIC 37°

Femmina dirittta compatta JIC 37°

DN	ROSCA THREAD		Referencia Part n°	€
1/4"	7/16" 20h UNF		851420704	19,98
5/16"	1/2" 20h UNF		851420805	21,84
3/8"	9/16" 18h UNF		851420906	22,21
1/2"	3/4" 16h UNF		851421208	28,17
3/4"	1"1/16 12h UN		851421712	42,77
1"	1"5/16 12h UN		851422116	69,19
1" 1/4	1"5/8 12h UN		851422620	117,31
1"1/2	1"7/8 12h UN	NEW	851423024	162,61
2"	2" 1/2 12h UN	NEW	851424032	298,29

Machos una sola pieza rosca JIC 37°

One piece JIC 37° male

Mâle pré-serti JIC 37°

Maschio compatto JIC sede 37°

DN	ROSCA THREAD		Referencia Part n°	€
1/4"	7/16" 20h UNF		851400704	26,50
3/8"	9/16" 18h UNF		851400906	31,19
1/2"	3/4" 16h UNF		851401208	33,45
5/8"	1"1/16 12h UN	NEW	851401710	50,56
3/4"	1"1/16 12h UN		851401712	50,67
1"	1"5/16 12h UN		851402116	80,85
1"1/4	1"5/8 12h UN	NEW	851402620	127,23
1"1/2	1"7/8 12h UN	NEW	851403024	166,03
2"	2"1/2 12h UN	NEW	851404032	343,38

Hembras giratorias 90° una sola pieza rosca JIC 37°

One piece JIC 37° female (90° Elbow)

90° Femelle pré-sertie JIC 37°

Femmina 90° compatta JIC 37°

DN	ROSCA THREAD		Referencia Part n°	€
1/4"	7/16" 20h UNF		851380704	29,32
3/8"	9/16" 18h UNF		851380906	34,64
1/2"	3/4" 16h UNF		851381208	42,32
3/4"	1"1/16 12h UN		851381712	67,29
1"	1"5/16 12h UN		851382116	103,89
1"1/4	1"5/8 12h UN	NEW	851382620	174,91
1"1/2	1"7/8 12h UN	NEW	851383024	281,08
2"	2"1/2 12h UN	NEW	851384032	577,91

Hembras giratorias rectas una sola pieza rosca JIC 37° doble hexagonal

One piece JIC 37° double hexagonal female

Femelle pré-sertie JIC 37° double hexagonal

Femmina diritta JIC 37° doppio esagono

DN	ROSCA THREAD		Referencia Part n°	€
1/4"	7/16" 20h UNF		852420704	24,41
3/8"	1/2" 20 UNF	NEW	852420806	33,45
3/8"	9/16" 18h UNF		852420906	26,25
1/2"	3/4" 16h UNF		852421208	30,62
1/2"	7/8" 14UNF	NEW	852421408	43,77
5/8"	7/8" 14UNF	NEW	852421410	50,45
5/8"	1"1/16 12 UN	NEW	852421710	54,80
3/4"	1"1/16 12h UN		852421712	52,28
1"	1"5/16 12h UN		852422116	80,84
1"1/4	1" 5/8 12h UN		852422620	150,01
1"1/2	1"7/8 12h UN		852423024	199,07
2"	2"1/2 12h UN	NEW	852424032	363,10

Hembras giratorias 45° una sola pieza rosca JIC 37°

One piece JIC 37° female (45° Elbow)

45° Femelle pré-sertie JIC 37°

Femmina 45° compatta JIC 37°

DN	ROSCA THREAD		Referencia Part n°	€
1/4"	7/16" 20h UNF		851390704	30,38
3/8"	9/16" 18h UNF		851390906	36,15
1/2"	3/4" 16h UNF		851391208	39,80
3/4"	1"1/16 12h UN		851391712	67,29
1"	1"5/16 12h UN		851392116	103,89
1"1/4	1"5/8 12h UN	NEW	851392620	174,91
1"1/2	1"7/8 12h UN	NEW	851393024	268,46
2"	2"1/2 12h UN	NEW	851394032	577,91

CONEXIONES UNA SOLA PIEZA PTFE CORRUGADO

One piece fittings for convoluted PTFE
Embouts pré-sertis pour PTFE convoluté
Raccordi compatti per PTFE corrugato

Hembras giratorias rectas una sola pieza rosca ORFS doble hexagonal

One piece doble hexagonal ORFS female

Femelle pré-sertie ORFS double hexagonal

Femmina diritta compatta ORFS

DN	ROSCA THREAD		Referencia Part n°	€
1/4"	9/16"-18h		859000904	39,12
3/8"	11/16"-16h		859001106	44,02
1/2"	13/16"-16h		859001308	51,78
3/4"	1"3/16-12h		859001912	105,02
1"	1"7/16-12h		859002316	113,90
1"1/4	1" 11/16-16h	NEW	859002720	205,07
1"1/2	2" 12h	NEW	859003224	247,51

Machos una sola pieza rosca ORFS

One piece ORFS male

Mâle pré-serti ORFS

Maschio compatto ORFS

DN	ROSCA THREAD		Referencia Part n°	€
1/4"	9/16"-18h		859120904	45,55
3/8"	11/16"-16h		859121106	43,79
1/2"	13/16"-16h		859121308	55,21
3/4"	1"3/16-12h		859121912	98,49
1"	1"7/16-12h		859122316	142,73
1"1/4	1"11/16 12h	NEW	859122720	194,96
1"1/2	2" 12h	NEW	859123224	285,14

Hembras giratorias 90° una sola pieza rosca ORFS

One piece ORFS female (90° Elbow)

90° Femelle pré-sertie ORFS

Femmina 90° compatta ORFS

DN	ROSCA THREAD		Referencia Part n°	€
1/4"	9/16"-18h		859070904	68,22
3/8"	11/16"-16h		859071106	80,10
1/2"	13/16"-16h		859071308	91,66
3/4"	1"3/16-12h		859071912	150,30
1"	1"7/16-12h		859072316	221,35
1"1/4	1"11/16-16h	NEW	859072720	303,49
1"1/2	2" 12h	NEW	859073224	810,16

Hembras giratorias 45° una sola pieza rosca ORFS

One piece ORFS female (45° Elbow)

45° Femelle pré-sertie ORFS

Femmina 45° compatta ORFS

DN	ROSCA THREAD		Referencia Part n°	€
1/4"	9/16"-18h		859080904	68,22
3/8"	11/16"-16h		859081106	80,10
1/2"	13/16"-16h		859081308	91,67
3/4"	1"3/16-12h		859081912	150,30
1"	1"7/16-12h		859082316	221,35
1"1/4	1"11/16-16h	NEW	859082720	303,49
1"1/2	2" 12h	NEW	859083224	810,16

CONEXIONES UNA SOLA PIEZA PTFE CORRUGADO

One piece fittings for convoluted PTFE
Embouts pré-sertis pour PTFE convoluté
Raccordi compatti per PTFE corrugato

Hembras giratorias rectas una sola pieza rosca NPSM cono 60°

One piece NPSM female 60° cone

Femelle pré-sertie NPSM cone 60°´

Femmina diritta compatta NPSM sede 60°

DN	ROSCA THREAD	Referencia Part n°	€
1/4"	1/4" 18h NPSM	**852610404**	**22,90**
3/8"	3/8" 18h NPSM	**852610606**	**23,82**
1/2"	1/2" 14h NPSM	**852610808**	**31,56**
3/4"	3/4" 14h NPSM	**852611212**	**49,26**
1"	1" - 11 1/2 h NPSM	**852611616**	**80,29**

Hembras giratorias 90° una sola pieza rosca NPSM cono 60°

One piece NPSM female 60° cone (90° Elbow)

90° Femelle pré-sertie NPSM cone 60°

Femmina 90° compatta NPSM sede 60°

DN	ROSCA THREAD	Referencia Part n°	€
1/4"	1/4" 18h NPSM	**852620404**	**33,10**
3/8"	3/8" 18h NPSM	**852620606**	**35,38**
1/2"	1/2" 14h NPSM	**852620808**	**45,91**
3/4"	3/4" 14h NPSM	**852621212**	**77,81**
1"	1" - 11 1/2 h NPSM	**852621616**	**110,75**

Hembras giratorias 45° una sola pieza rosca NPSM cono 60°

One piece NPSM female 60° cone (45° Elbow)

45° Femelle pré-sertie NPSM cone 60°

Femmina 45° compatta NPSM sede 60°

DN	ROSCA THREAD	Referencia Part n°	€
1/4"	1/4" 18h NPSM	**852630404**	**33,10**
3/8"	3/8" 18h NPSM	**852630606**	**35,38**
1/2"	1/2" 14h NPSM	**852630808**	**45,91**
3/4"	3/4" 14h NPSM	**852631212**	**77,82**
1"	1" - 11 1/2 h NPSM	**852631616**	**110,75**

Machos una sola pieza rosca cónica NPT

One piece NPT male pipe straight

Mâle pré-serti NPT

Maschio compatto conico NPT

DN	ROSCA THREAD		Referencia Part n°	€
1/4"	1/8" NPT	NEW	**851610204**	**27,53**
1/4"	1/4" NPT		**851610404**	**20,68**
5/16"	1/4" NPT	NEW	**851610405**	**28,69**
3/8"	1/4" NPT	NEW	**851610406**	**30,11**
1/4"	3/8" NPT	NEW	**851610604**	**29,41**
5/16"	3/8" NPT	NEW	**851610605**	**31,37**
3/8"	3/8" NPT		**851610606**	**21,56**
1/2"	3/8" NPT	NEW	**851610608**	**36,86**
3/8"	1/2" NPT	NEW	**851610806**	**36,59**
1/2"	1/2" NPT		**851610808**	**29,48**
5/8"	1/2" NPT	NEW	**851610810**	**40,84**
1/2"	3/4" NPT	NEW	**851611208**	**48,66**
5/8"	3/4" NPT	NEW	**851611210**	**48,61**
3/4"	3/4" NPT		**851611212**	**44,97**
3/4"	1" NPT	NEW	**851611612**	**68,20**
1"	1" NPT		**851611616**	**72,52**
1"	1"1/4 NPT	NEW	**851612016**	**115,20**
1"1/4	1"1/4 NPT	NEW	**851612020**	**124,16**
1"1/2	1"1/2 NPT	NEW	**851612424**	**153,31**
2"	2" NPT	NEW	**851613232**	**262,94**

Hembras giratorias rectas una sola pieza rosca NPSM cono 60° doble hexagonal

One piece double hexagonal NPSM female 60° cone

Femelle pré-sertie NPSM cone 60° double hexagonal

Femmina diritta compatta NPSM sede 60° doppio esagono

DN	ROSCA THREAD	Referencia Part n°	€
1/4"	1/4" NPSM	**853610404**	**35,85**
3/8"	3/8" 18h NPSM	**853610606**	**36,91**
1/2"	1/2" 14h NPSM	**853610808**	**42,54**
3/4"	3/4" NPSM	**853611212**	**63,27**
1"	1" - 11 1/2 h NPSM	**853611616**	**100,16**

CONEXIONES UNA SOLA PIEZA PTFE CORRUGADO

One piece fittings for convoluted PTFE
Embouts pré-sertis pour PTFE convoluté
Raccordi compatti per PTFE corrugato

Hembras giratorias rectas una sola pieza rosca Métrica cono 24° - DKO

One piece Metric female 24° cone

Femelle pré-sertie Métrique cone 24°

Femmina diritta compatta Metrica sede 24°

DN	TUBO PIPE	SERIE SERIES	ROSCA THREAD		Referencia Part n°	€
1/4"	8	L	M14x1.5		**85804140804**	**19,52**
3/8"	12	L	M18x1.5		**85804181206**	**21,63**
1/2"	15	L	M22x1.5		**85804221508**	**29,36**
3/4"	22	L	M30x2		**85804302212**	**48,17**
1"	28	L	M36x2		**85804362816**	**78,14**
1"1/4	35	L	M45x2	NEW	**85804453520**	**117,37**
1"1/2	42	L	M52x2	NEW	**85804524224**	**159,64**
1/4"	8	S	M16x1.5		**85804160804**	**22,35**
3/8"	12	S	M20x1.5		**85804201206**	**24,80**
1/2"	16	S	M24x1.5		**85804241608**	**29,15**
3/4"	25	S	M36x2		**85804362512**	**67,11**
1"	30	S	M42x2		**85804423016**	**98,70**
1"1/4	38	S	M52x2	NEW	**85804523820**	**150,81**

Machos una sola pieza rosca Métrica cono 24°

One piece Metric male 24° cone

Mâle pré-serti Métrique cone 24°

Maschio compatto Metrico sede 24°

DN	TUBO PIPE	SERIE SERIES	ROSCA THREAD		Referencia Part n°	€
1/4"	8	L	M14x1.5		**85203140804**	**22,86**
3/8"	12	L	M18x1.5		**85203181206**	**20,49**
1/2"	15	L	M22x1.5		**85203221508**	**29,39**
3/4"	22	L	M30x2		**85203302212**	**53,10**
1"	28	L	M36x2		**85203362816**	**79,47**
1"1/4	35	L	M45x2	NEW	**85203453520**	**121,16**
1"1/2	42	L	M52x2	NEW	**85203524224**	**184,41**
1/4"	8	S	M16x1.5		**85203160804**	**28,49**
3/8"	12	S	M20x1.5		**85203201206**	**31,24**
1/2"	16	S	M24x1.5		**85203241608**	**32,38**
3/4"	25	S	M36x2		**85203362512**	**72,73**
1"	30	S	M42x2		**85203423016**	**112,30**
1"1/4	38	S	M52x2	NEW	**85203523820**	**167,37**

Hembras giratorias 90° una sola pieza rosca Métrica cono 24° - DKO 90°

One piece Metric female 24° cone (90° Elbow)

90° Femelle pré-sertie Métrique cone 24°

Femmina 90° compatta Metrica sede 24°

DN	TUBO PIPE	ROSCA THREAD	SERIE SERIES		Referencia Part n°	€
1/4"	8	M14x1.5	L		**85305140804**	**29,83**
3/8"	12	M18x1.5	L		**85305181206**	**34,17**
1/2"	15	M22x1.5	L		**85305221508**	**43,45**
3/4"	22	M30x2	L		**85305302212**	**72,79**
1"	28	M36x2	L		**85305362816**	**113,86**
1"1/4	35	M45x2	L	NEW	**85305453520**	**194,15**
1"1/2	42	M52x2	L	NEW	**85305524224**	**283,45**
1/4"	8	M16x1.5	S		**85305160804**	**34,40**
3/8"	12	M20x1.5	S		**85305201206**	**39,34**
1/2"	16	M24x1.5	S		**85305241608**	**46,24**
3/4"	25	M36x2	S		**85305362512**	**96,25**
1"	30	M42x2	S		**85305423016**	**149,44**
1"1/4	38	M52x2	S	NEW	**85305523820**	**245,94**

Hembras giratorias 45° una sola pieza rosca Métrica cono 24° - DKO 45°

One piece Metric female 24° cone (45° Elbow)

45° Femelle pré-sertie Métrique cone 24°

Femmina 45° compatta Metrica sede 24°

DN	TUBO PIPE	SERIE SERIES	ROSCA THREAD		Referencia Part n°	€
1/4"	8	L	M14x1.5		**85306140804**	**29,83**
3/8"	12	L	M18x1.5		**85306181206**	**34,39**
1/2"	15	L	M22x1.5		**85306221508**	**42,28**
3/4"	22	L	M30x2		**85306302212**	**72,79**
1"	28	L	M36x2		**85306362816**	**113,86**
1"1/4	35	L	M45x2	NEW	**85306453520**	**194,15**
1"1/2	42	L	M52x2	NEW	**85306524224**	**283,45**
1/4"	8	S	M10x1.5		**85306160804**	**34,40**
3/8"	12	S	M20x1.5		**85306201206**	**39,34**
1/2"	16	S	M24x1.5		**85306241608**	**46,24**
3/4"	25	S	M36x2		**85306362512**	**96,25**
1"	30	S	M42x2		**85306423016**	**148,33**
1"1/4	38	S	M52x2	NEW	**85306523820**	**245,94**

CONEXIONES UNA SOLA PIEZA PTFE CORRUGADO

One piece fittings for convoluted PTFE
Embouts pré-sertis pour PTFE convoluté
Raccordi compatti per PTFE corrugato

Hembras giratorias rectas una sola pieza rosca BSP cono 60°

One piece BSP female 60° cone

Femelle pré-sertie BSP cone 60°

Femmina diritta compatta BSP sede 60°

DN	ROSCA THREAD		Referencia Part n°	€
1/4"	1/4" BSP		851000404	18,69
3/8"	3/8" BSP		851000606	21,01
1/2"	1/2" BSP		851000808	26,51
3/4"	3/4" BSP		851001212	42,42
1"	1" BSP		851001616	67,17
1"1/4	1"1/4 BSP	NEW	851002020	118,34
1"1/2	1"1/2 BSP	NEW	851002424	148,79
2"	2" BSP	NEW	851003232	257,95

Machos una sola pieza rosca cilíndrica BSP cono 60°

One piece BSP male 60° cone

Mâle pré-serti BSP cone 60°

Maschio compatto cilindrico BSP sede 60°

DN	ROSCA THREAD		Referencia Part n°	€
1/4"	1/4" BSP		851120404	22,48
3/8"	3/8" BSP		851120606	22,77
1/2"	1/2" BSP		851120808	29,95
3/4"	3/4" BSP		851121212	45,96
1"	1" BSP		851121616	83,24
1"1/4	1"1/4 BSP	NEW	851122020	132,81
1"1/2	1"1/2 BSP	NEW	851122424	169,17
2"	2" BSP	NEW	851123232	271,76

Hembras giratorias 90° una sola pieza rosca BSP cono 60°

One piece BSP female 60° cone (90° Elbow)

90° Femelle pré-sertie BSP cone 60°

Femmina 90° compatta BSP sede 60°

DN	ROSCA THREAD		Referencia Part n°	€
1/4"	1/4" BSP		851070404	28,20
3/8"	3/8" BSP		851070606	30,77
1/2"	1/2" BSP		851070808	39,67
3/4"	3/4" BSP		851071212	65,02
1"	1" BSP		851071616	98,90
1"1/4	1"1/4 BSP	NEW	851072020	183,60
1"1/2	1"1/2 BSP	NEW	851072424	249,33
2"	2" BSP	NEW	851073232	454,04

Hembras giratorias rectas una sola pieza rosca BSP cono 60° doble hexagonal

One piece double hexagonal BSP female 60° cone

Femelle pré-sertie BSP cone 60° double hexagonal

Femmina diritta compatta BSP sede 60° doppio esagono

DN	ROSCA THREAD		Referencia Part n°	€
1/4"	1/4" BSP		854000404	30,26
3/8"	3/8" BSP		854000606	31,12
1/2"	1/2" BSP		854000808	36,29
3/4"	3/4" BSP		854001212	58,41
1"	1" BSP		854001616	92,42
1"1/4	1"1/4 BSP	NEW	854002020	128,80
1"1/2	1"1/2 BSP	NEW	854002424	193,47
2"	2" BSP	NEW	854003232	328,24

Hembras giratorias 45° una sola pieza rosca BSP cono 60°

One piece BSP female 60° cone (45° Elbow)

45° Femelle pré-sertie BSP cone 60°

Femmina 45° compatta BSP sede 60°

DN	ROSCA THREAD		Referencia Part n°	€
1/4"	1/4" BSP		851080404	28,21
3/8"	3/8" BSP		851080606	31,44
1/2"	1/2" BSP		851080808	39,67
3/4"	3/4" BSP		851081212	65,02
1"	1" BSP		851081616	98,90
1"1/4	1"1/4 BSP	NEW	851082020	170,36
1"1/2	1"1/2 BSP	NEW	851082424	249,33
2"	2" BSP	NEW	851083232	454,05

CONEXIONES UNA SOLA PIEZA SERIE BW R12/4SP/4SH NO PELAR

One piece fittings BW Series R12/4SP/4SH No Skive
Embouts pré-sertis R12/4SP/4SH Série BW Sans dénuder
Raccordi Compatti R12/4SP/4SH Serie BW senza spellatura

Hembras giratorias rectas una sola pieza JIC 37° doble hexagonal

One piece double hexagonal JIC 37° Swivel female

Femelle pré-sertie JIC 37° double hexagonal

Femmina diritta compatta JIC 37° doppio esagono

DN	ROSCA THREAD		Referencia Part n°	€
5/8"	7/8" 14h UNF		**Z682421410**	**61,50**
3/4"	1"1/16 12h UN		**Z682421712**	**68,79**
1"	1"1/16 12h UN	NEW	**Z682421716**	**116,15**
1"	1"5/16 12h UN		**Z682422116**	**110,67**
1"1/4	1"5/8 12h UN		**Z682422620**	**211,49**
1"1/2	1"7/8 12h UN		**Z682423024**	**267,34**
2"	2"1/2 12h UN		**Z682424032**	**463,87**

Hasta fin de existencias / *Until end of stock* / Jusqu´à la fin du stock / *Fino ad esaurimento*

Machos una sola pieza rosca JIC 37° con junta

One piece JIC 37° male with o'ring

Mâle pré-serti JIC 37° avec joint torique

Maschio compatto JIC 37° con o'ring

DN	ROSCA THREAD	Referencia Part n°	€
1/2"	3/4" 16h UNF	**Z681411208**	**47,89**
5/8"	7/8" 14h UNF	**Z681411410**	**68,93**
3/4"	1"1/16 12h UNF	**Z681411712**	**86,46**
1"	1"5/16 12h UNF	**Z681412116**	**121,98**
1"1/4	1"5/8 12h UNF	**Z681412620**	**227,42**

Hasta fin de existencias / *Until end of stock* / Jusqu´à la fin du stock / *Fino ad esaurimento*

Hembras giratorias 90° una sola pieza rosca JIC 37°

One piece JIC 37° Swivel female (90° Elbow)

Coude 90° femelle pré-sertie JIC 37°

Femmina gir. compatta 90° JIC 37°

DN	ROSCA THREAD	Referencia Part n°	€
1/2"	3/4" 16h UNF	**Z681381208**	**52,79**
5/8"	7/8" 14h UNF	**Z681381410**	**69,06**
3/4"	1"1/16 12h UNF	**Z681381712**	**86,22**
1"	1"5/16 12h UNF	**Z681382116**	**137,43**
1"1/4	1"5/8 12h UNF	**Z681382620**	**240,36**
1"1/2	1"7/8 12h UNF	**Z681383024**	**362,55**
2"	2"1/2 12h UNF	**Z681384032**	**713,27**

Hasta fin de existencias / *Until end of stock* / Jusqu´à la fin du stock / *Fino ad esaurimento*

Hembras giratorias 45° una sola pieza rosca JIC 37°

One piece JIC 37° Swivel female (45° Elbow)

Coude 45° femelle pré-sertie JIC 37°

Femmina gir. compatta 45° JIC 37°

DN	ROSCA THREAD	Referencia Part n°	€
1/2"	3/4" 16h UNF	**Z681391208**	**49,86**
5/8"	7/8" 14h UNF	**Z681391410**	**72,63**
3/4"	1"1/16 12h UNF	**Z681391712**	**86,22**
1"	1"5/16 12h UNF	**Z681392116**	**137,42**
1"1/4	1"5/8 12h UNF	**Z681392620**	**240,36**
1"1/2	1"7/8 12h UNF	**Z681393024**	**347,90**
2"	2"1/2 12h UNF	**Z681394032**	**713,27**

Hasta fin de existencias / *Until end of stock* / Jusqu´à la fin du stock / *Fino ad esaurimento*

CONEXIONES UNA SOLA PIEZA SERIE BW R12/4SP/4SH NO PELAR

One piece fittings BW Series R12/4SP/4SH No Skive
Embouts pré-sertis R12/4SP/4SH Série BW Sans dénuder
Raccordi Compatti R12/4SP/4SH Serie BW senza spellatura

Hembras giratorias rectas una sola pieza ORFS doble hexagonal

One piece ORFS Swivel female straight double hexagonal

Femelle pré-sertie droite ORFS double hexagonale

Femmina diritta compatta ORFS doppio esagono

DN	ROSCA THREAD	Referencia Part n°	€
1/2"	13/16"-16h	**Z689011308**	**61,87**
3/4"	1"3/16-12h	**Z689011912**	**100,89**
1"	1"7/16-12h	**Z689012316**	**149,05**
1"1/4	1" 11/16-12h	**Z689012720**	**275,41**
1"1/2	2"-12h	**Z689013224**	**323,58**

Hasta fin de existencias / *Until end of stock* / Jusqu´à la fin du stock / *Fino ad esaurimento*

Hembras giratorias 90° una sola pieza ORFS

One piece ORFS Swivel female (90° Elbow)

Coude 90° femelle pré-sertie ORFS

Femmina 90° compatta ORFS

DN	ROSCA THREAD	Referencia Part n°	€
1/2"	13/16"-16h	**Z689071308**	**110,09**
3/4"	1"3/16-12h	**Z689071912**	**177,64**
1"	1"7/16-12h	**Z689072316**	**265,28**
1"1/4	1" 11/16-12h	**Z689072720**	**389,64**

Hasta fin de existencias / *Until end of stock* / Jusqu´à la fin du stock / *Fino ad esaurimento*

Machos compactos ORFS

One piece ORFS Male

Mâle pré-serti ORFS

Maschio compatto ORFS

DN	ROSCA THREAD	Referencia Part n°	€
3/4"	1"3/16-12h	**Z689121912**	**122,44**
1"	1"7/16-12h	**Z689122316**	**177,63**

Hasta fin de existencias / *Until end of stock* / Jusqu´à la fin du stock / *Fino ad esaurimento*

Hembras giratorias 45° una sola pieza ORFS

One piece ORFS Swivel female (45° Elbow)

Coude 45° femelle pré-sertie ORFS

Femmina 45° compatta ORFS

DN	ROSCA THREAD	Referencia Part n°	€
3/4"	1"3/16-12h	**Z689081912**	**177,64**
1"	1"7/16-12h	**Z689082316**	**265,27**
1"1/4	1" 11/16-12h	**Z689082720**	**389,64**

Hasta fin de existencias / *Until end of stock* / Jusqu´à la fin du stock / *Fino ad esaurimento*

Machos cónicos una sola pieza NPT

One piece NPT Male pipe straight

Mâle pré-serti conique NPT

Maschio compatto conico NPT

DN	ROSCA THREAD	Referencia Part n°	€
1/2"	1/2" NPT	**Z681610808**	**37,89**
3/4"	3/4" NPT	**Z681611212**	**60,30**
1"	1" NPT	**Z681611616**	**101,01**
1"1/4	1"1/4 NPT	**Z681612020**	**181,47**
1"1/2	1"1/2 NPT	**Z681612424**	**214,21**

Hasta fin de existencias / *Until end of stock* / Jusqu´à la fin du stock / *Fino ad esaurimento*

Hembras giratorias rectas una sola pieza NPSM cono 60° doble hexagonal con junta

One piece double hexagonal NPSM female 60° cone with o'ring

Femelle pré-sertie NPSM cone 60° double hexagonal avec joint torique

Femmina diritta compatta NPSM cono 60° doppio esagono con guarnizione

DN	ROSCA THREAD	Referencia Part n°	€
3/4"	3/4" NPSM	**Z684611212**	**99,52**
1"	1" NPSM	**Z684611616**	**148,66**

Hasta fin de existencias / *Until end of stock* / Jusqu´à la fin du stock / *Fino ad esaurimento*

CONEXIONES UNA SOLA PIEZA SERIE BW R12/4SP/4SH NO PELAR

One piece fittings BW Series R12/4SP/4SH No Skive
Embouts pré-sertis R12/4SP/4SH Série BW Sans dénuder
Raccordi Compatti R12/4SP/4SH Serie BW senza spellatura

Bridas rectas una sola pieza SAE 3000 PSI

One piece 3000 PSI SAE Straight Flange / Code 61

Bride SAE droite pré-sertie série 3000 PSI

Flangia diritta compatta SAE 3000

DN	Ø		Referencia Part n°	€
1/2"	30.2		**Z681820808**	**65,28**
3/4"	38.1		**Z681821212**	**93,19**
1"	44.5		**Z681821616**	**128,53**
1"1/4	50.8		**Z681822020**	**193,63**
1"1/4	60.3	NEW	**Z681822420**	**229,64**
1"1/2	60.3		**Z681822424**	**248,04**
2"	71.4		**Z681823232**	**394,11**

Hasta fin de existencias / *Until end of stock* / Jusqu´à la fin du stock / *Fino ad esaurimento*

Bridas 90° una sola pieza SAE 3000 PSI

One piece 3000 PSI SAE Flange (90° Elbow) / Code 61

Bride SAE coude 90° pré-sertie série 3000 PSI

Flangia 90° compatta SAE 3000

DN	Ø	Referencia Part n°	€
3/4"	38.1	**Z681831212**	**127,52**
1"	44.5	**Z681831616**	**176,45**
1"1/4	50.8	**Z681832020**	**275,81**
1" 1/2	60.3	**Z681832424**	**373,34**
2"	71.4	**Z681833232**	**555,22**

Hasta fin de existencias / *Until end of stock* / Jusqu´à la fin du stock / *Fino ad esaurimento*

Bridas 45° una sola pieza SAE 3000 PSI

One piece 3000 PSI SAE Flange (45° Elbow) / Code 61

Bride SAE coude 45° pré-sertie série 3000 PSI

Flangia 45° compatta SAE 3000

DN	Ø	Referencia Part n°	€
3/4"	38.1	**Z681841212**	**127,52**
1"	44.5	**Z681841616**	**176,45**
1"1/4	50.8	**Z681842020**	**275,81**
1" 1/2	60.3	**Z681842424**	**373,34**
2"	71.4	**Z681843232**	**555,22**

Hasta fin de existencias / *Until end of stock* / Jusqu´à la fin du stock / *Fino ad esaurimento*

Bridas rectas una sola pieza SAE 6000 PSI

One piece 6000 PSI SAE Straight Flange / Code 62

Bride SAE droite pré-sertie série 6000 PSI

Flangia diritta compatta SAE 6000

DN	Ø	Referencia Part n°	€
1/2"	30.2	**Z682820808**	**73,79**
3/4"	41.3	**Z682821212**	**106,59**
1"	47.6	**Z682821616**	**148,09**
1"1/4	54	**Z682822020**	**222,91**
1"1/2	63.5	**Z682822424**	**288,51**
2"	79.4	**Z682823232**	**473,70**

Hasta fin de existencias / *Until end of stock* / Jusqu´à la fin du stock / *Fino ad esaurimento*

Bridas 90° una sola pieza SAE 6000 PSI

One piece 6000 PSI SAE Flange (90° Elbow) / Code 62

Bride SAE coude 90° pré-sertie série 6000 PSI

Flangia 90° compatta SAE 6000

DN	Ø	Referencia Part n°	€
1/2"	30.2	**Z682830808**	**89,00**
5/8"	38.1	**Z682831210**	**144,22**
3/4"	41.3	**Z682831212**	**135,37**
1"	47.6	**Z682831616**	**203,63**
1"1/4	54	**Z682832020**	**286,27**
1"1/2	63.5	**Z682832424**	**459,52**
2"	79.4	**Z682833232**	**582,00**

Hasta fin de existencias / *Until end of stock* / Jusqu´à la fin du stock / *Fino ad esaurimento*

Bridas 45° una sola pieza SAE 6000 PSI

One piece 6000 PSI SAE Flange (45° Elbow) / Code 62

Bride SAE coude 45° pré-sertie série 6000 PSI

Flangia 45° compatta SAE 6000

DN	Ø	Referencia Part n°	€
1/2"	30.2	**Z682840808**	**89,00**
5/8"	38.1	**Z682841210**	**144,22**
3/4"	41.3	**Z682841212**	**135,47**
1"	47.6	**Z682841616**	**203,63**
1"1/4	54	**Z682842020**	**284,79**
1"1/2	63.5	**Z682842424**	**458,61**
2"	79.4	**Z682843232**	**582,00**

Hasta fin de existencias / *Until end of stock* / Jusqu´à la fin du stock / *Fino ad esaurimento*

CONEXIONES UNA SOLA PIEZA SERIE BW R12/4SP/4SH NO PELAR

One piece fittings BW Series R12/4SP/4SH No Skive
Embouts pré-sertis R12/4SP/4SH Série BW Sans dénuder
Raccordi Compatti R12/4SP/4SH Serie BW senza spellatura

Hembras giratorias rectas una sola pieza rosca Métrica cono 24° con junta tórica

One piece Metric swivel female 24° seat with o'ring

Femelle pré-sertie Métrique 24° avec o'ring

Femmina compatta Metrica sede 24° con o'ring

DN	TUBO PIPE	SERIE SERIES	ROSCA THREAD	Referencia Part n°	€
1/2"	16	S	M24x1.5	**Z68204241608**	**37,50**
3/4"	20	S	M30x2	**Z68204302012**	**77,38**
3/4"	25	S	M36x2	**Z68204362512**	**86,01**
1"	30	S	M42x2	**Z68204423016**	**131,40**
1"1/4	38	S	M52x2	**Z68204523820**	**212,41**

Hasta fin de existencias / *Until end of stock* / Jusqu´à la fin du stock / *Fino ad esaurimento*

Macho una sola pieza Métricos cono 24°

One piece Metric male stud 24° cone

Mâle pré-serti Métrique cone 24°

Maschio compatto Metrico sede 24°

DN	TUBO PIPE	SERIE SERIES	ROSCA THREAD	Referencia Part n°	€
3/4"	20	S	M30x2	**Z68203302012**	**74,01**
3/4"	25	S	M36x2	**Z68203362512**	**92,53**
1"	30	S	M42x2	**Z68203423016**	**147,19**
1"1/4	38	S	M52x2	**Z68203523820**	**231,64**

Hasta fin de existencias / *Until end of stock* / Jusqu´à la fin du stock / *Fino ad esaurimento*

Hembras giratorias 90° una sola pieza Métricas cono 24° con junta tórica

One piece Metric swivel female 24° seat with o'ring (90° Elbow)

Coude 90° femelle pré-sertie Métrique 24° avec o'ring

Femmina compatta Metrica 90° sede 24° con o'ring

DN	TUBO PIPE	SERIE SERIES	ROSCA THREAD	Referencia Part n°	€
3/4"	20	S	M30x2	**Z68205302012**	**96,46**
3/4"	25	S	M36x2	**Z68205362512**	**119,83**
1"	30	S	M42x2	**Z68205423016**	**190,31**
1"1/4	38	S	M52x2	**Z68205523820**	**322,86**

Hasta fin de existencias / *Until end of stock* / Jusqu´à la fin du stock / *Fino ad esaurimento*

Hembras giratorias 45° una sola pieza Métricas cono 24° con junta tórica

One piece Metric swivel female 24° seat with o'ring (45° Elbow)

Coude 45° femelle pré-sertie Métrique 24° avec o'ring

Femmina compatta Metrica 45° sede 24°

DN	TUBO PIPE	SERIE SERIES	ROSCA THREAD	Referencia Part n°	€
3/4"	20	S	M30x2	**Z68206302012**	**96,46**
3/4"	25	S	M36x2	**Z68206362512**	**119,83**
1"	30	S	M42x2	**Z68206423016**	**189,03**
1"1/4	38	S	M52x2	**Z68206523820**	**322,86**

Hasta fin de existencias / *Until end of stock* / Jusqu´à la fin du stock / *Fino ad esaurimento*

CONEXIONES UNA SOLA PIEZA SERIE BW R12/4SP/4SH NO PELAR

One piece fittings BW Series R12/4SP/4SH No Skive
Embouts pré-sertis R12/4SP/4SH Série BW Sans dénuder
Raccordi Compatti R12/4SP/4SH Serie BW senza spellatura

Hembras giratorias una sola pieza BSP 60° doble hexagonal

One piece double hexagonal BSP Swivel female cone 60° with joint

Femelle BSP pré-sertie cone 60° double hexagonal +joint

Femmina diritta compatta BSP sede 60° doppio esagono+giunta

DN	ROSCA THREAD	Referencia Part n°	€
1/2"	1/2" BSP	Z684100808	66,53
5/8"	5/8" BSP	Z684101210	93,88
3/4"	3/4" BSP	Z684101212	96,55
1"	1" BSP	Z684101616	143,85
1"1/4	1"1/4 BSP	Z684102020	270,95
1"1/2	1"1/2 BSP	Z684102424	369,42
2"	2" BSP	Z684103232	695,45

Hasta fin de existencias / *Until end of stock* / Jusqu´à la fin du stock / *Fino ad esaurimento*

Hembras giratorias 90° una sola pieza BSP 60° con junta tórica

One piece BSP Swivel female 60° cone with o'ring (90° Elbow)

Coude 90° femelle pré-sertie BSP 60° avec o'ring

Femmina 90° compatta BSP sede 60° con o'ring

DN	ROSCA THREAD	Referencia Part n°	€
1/2"	1/2" BSP	Z681170808	60,02
3/4"	3/4" BSP	Z681171212	90,28
1"	1" BSP	Z681171616	147,92
1"1/4	1"1/4 BSP	Z681172020	272,68

Hasta fin de existencias / *Until end of stock* / Jusqu´à la fin du stock / *Fino ad esaurimento*

Hembras giratorias 45° una sola pieza BSP 60° con junta tórica

One piece BSP Swivel female 60° cone with o'ring (45° Elbow)

Coude 45° femelle pré-sertie BSP 60° avec o'ring

Femmina 45° compatta BSP sede 60° con o'ring

DN	ROSCA THREAD	Referencia Part n°	€
1/2"	1/2" BSP	Z681180808	55,87
3/4"	3/4" BSP	Z681181212	84,23
1"	1" BSP	Z681181616	133,79
1"1/4	1"1/4 BSP	Z681182020	227,52

Hasta fin de existencias / *Until end of stock* / Jusqu´à la fin du stock / *Fino ad esaurimento*

Machos cilíndricos una sola pieza BSP 60°

One piece BSP Male 60° cone

Mâle pré-serti gaz cylindrique BSP 60°

Maschio compatto BSP cilindrico sede 60°

DN	ROSCA THREAD	Referencia Part n°	€
1/2"	1/2" BSP	Z681120808	38,44
3/4"	3/4" BSP	Z681121212	61,45
1"	1" BSP	Z681121616	111,27
1"1/4	1"1/4 BSP	Z681122020	191,52
2"	2" BSP	Z681123232	357,82

Hasta fin de existencias / *Until end of stock* / Jusqu´à la fin du stock / *Fino ad esaurimento*

BWS

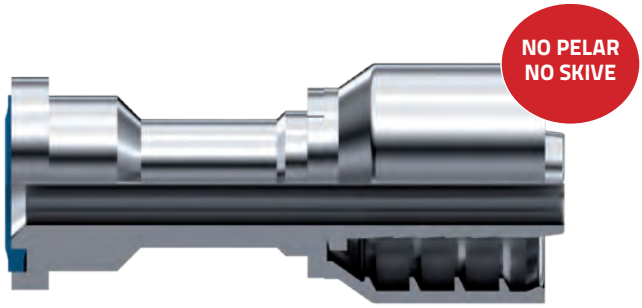

Mayor versatilidad. 1 casquillo - 4 mangueras
Greater versatility. 1 ferrule - 4 hoses

+

Reducción de stock. Uso de espiga STD
Stock optimisation. STD series

+

Menor tiempo de Montaje. No Pelar
Reduces assembly time. No skive

=

Ahorro económico.
Economic efficiency

BW+

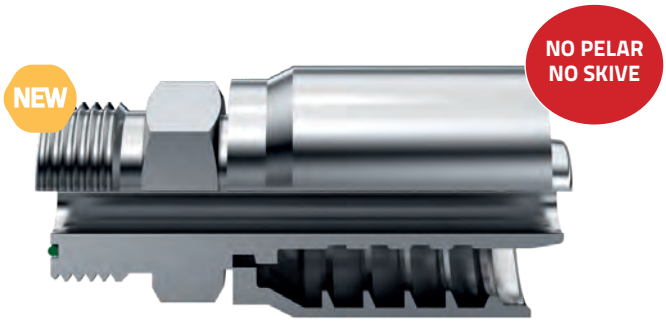

Alta Presión
High pressure

1" 1/4 - 1" 1/2-2

R13 - R15

+

Reducción de stock. Uso de espiga BW
Stock optimisation. BW series

+

Menor tiempo de Montaje. No Pelar
Reduces assembly time. No skive

CONEXIONES UNA PIEZA SERIE BW+ R13/R15 NO PELAR

One piece fittings BW+ Series R13/R15 No Skive
Embouts R13/R15 Série BW+ Sans denuder
Raccordi R13/R15 Serie BW+ senza spellatura

R13 & R15 Ø 3/4" - 1" –>> BWS

Hembras giratorias rectas una sola pieza JIC 37° doble hexag NEW

One piece double hexagonal JIC 37° Swivel female

Femelle pré-sertie JIC 37° double hexagonal

Femmina diritta compatta JIC 37° doppio esagono

DN	THREAD ROSCA	Part n° Referencia	€
1"1/4	1"5/8 12 UN	Z692422620	278,42
1"1/2	1"7/8 12 UN	Z692423024	414,96
2"	2" 1/2 12 UN	Z692424032	618,04

Machos una sola pieza rosca JIC 37° C/J NEW

One piece JIC 37° male with o'ring

Mâle pré-serti JIC 37° avec joint torique

Maschio compatto JIC 37° con o'ring

DN	THREAD ROSCA	Part n° Referencia	€
1"1/4	1"5/8 12 UN	Z691412620	172,97
1"1/2	1"7/8 12 UN	Z691413024	207,42
2"	2" 1/2 12 UN	Z691414032	381,82

Hembras giratorias 90° una sola pieza rosca JIC 37° NEW

One piece JIC 37° Swivel female (90° Elbow)

Coude 90° femelle pré-sertie JIC 37°

Femmina gir. compatta90° JIC 37°

DN	THREAD ROSCA	Part n° Referencia	€
1"1/4	1"5/8 12 UN	Z691382620	202,20
1"1/2	1"7/8 12 UN	Z691383024	291,32
2"	2" 1/2 12 UN	Z691384032	538,42

Hembras giratorias 45° una sola pieza rosca JIC 37° NEW

One piece JIC 37° Swivel female (45° Elbow)

Coude 45° femelle pré-sertie JIC 37°

Femmina gir. compatta45° JIC 37°

DN	THREAD ROSCA	Part n° Referencia	€
1"1/4	1"5/8 12 UN	Z691392620	202,20
1"1/2	1"7/8 12 UN	Z691393024	291,32
2"	2" 1/2 12 UN	Z691394032	538,42

Hembras giratorias rectas una sola pieza ORFS doble hexagon NEW

One piece ORFS Swivel female straight double hexagonal

Femelle pré-sertie droite ORFS double hexagonale

Femmina diritta compatta ORFS doppio esagono

DN	THREAD ROSCA	Part n° Referencia	€
1"1/4	1" 11/16 12 UN	Z699012720	219,53
1"1/2	2" 12 UN	Z699013224	315,90

Hembras giratorias 90° una sola pieza ORFS NEW

One piece ORFS Swivel female (90° Elbow)

Coude 90° femelle pré-sertie ORFS

Femmina 90° compatta ORFS

DN	THREAD ROSCA	Part n° Referencia	€
1"1/4	1" 11/16 12 UN	Z699072720	517,62
73	2" 12 UN	Z699073224	1.404,24

Hembras giratorias 45° una sola pieza ORFS NEW

One piece ORFS Swivel female (45° Elbow)

Coude 45° femelle pré-sertie ORFS

Femmina 45° compatta ORFS

DN	THREAD ROSCA	Part n° Referencia	€
1"1/4	1"11/16 12 UN	Z699082720	517,62
1"1/2	2" 12 UN	Z699083224	1.404,24

Machos una sola pieza ORFS NEW

One piece ORFS Male

Mâle pré-serti ORFS

Maschio compatto ORFS

DN	THREAD ROSCA	Part n° Referencia	€
1"1/4	1"11/16 12 UN	Z699122720	337,82
1"1/2	2" 12 UN	Z699123224	495,96

CONEXIONES UNA PIEZA SERIE BW+ R13/R15 NO PELAR

One piece fittings BW+ Series R13/R15 No Skive
Embouts R13/R15 Série BW+ Sans denuder
Raccordi R13/R15 Serie BW+ senza spellatura

R13 & R15 Ø 3/4" - 1" –>> BWS

Hembras giratorias rectas una sola pieza rosca NPSM cono 60° doble hexagonal

NEW

One piece double hexagonal NPSM female 60° cone

Femelle pré-sertie NPSM cone 60° double hexagonal

Femmina diritta compatta NPSM sede 60° doppio esagono

DN	THREAD ROSCA	Part n° Referencia	€
1"1/4	1"1/4 - 11 1/2 h NPSM	Z693612020	267,81
1"1/2	1"1/2 - 11 1/2 h NPSM	Z693612424	364,68
2"	2" - 11 1/2 h NPSM	Z693613232	559,45

Machos una sola pieza rosca cónica NPT

NEW

One piece NPT Male pipe straight

Mâle pré-serti conique NPT

Maschio compatto conico NPT

DN	THREAD ROSCA	Part n° Referencia	€
1"1/4	1"1/4 - 11 1/2 h NPSM	Z691612020	164,59
1"1/2	1"1/2 - 11 1/2 h NPSM	Z691612424	238,22
2"	2" - 11 1/2 h NPSM	Z691613232	424,94

Bridas recta SAE 6000 PSI

NEW

One piece 6000 PSI SAE Straight Flange / Code 62

Bride SAE droite pré-sertie série 6000 PSI

Flangia diritta compatta SAE 6000

DN	Ø	Part n° Referencia	€
1"1/4	1"1/4	Z692822020	198,05
1"1/2	1"1/2	Z692822424	265,16
2"	2"	Z692823232	415,96

Bridas a 90° SAE 6000 PSI

NEW

One piece 6000 PSI SAE Flange (90° Elbow) / Code 62

Bride SAE coude 90° pré-sertie série 6000 PSI

Flangia 90° compatta SAE 6000

DN	Ø	Part n° Referencia	€
1"1/4	1"1/4	Z692832020	244,68
1"1/2	1"1/2	Z692832424	388,08
2"	2"	Z692833232	559,64

Bridas a 45° SAE 6000 PSI

NEW

One piece 6000 PSI SAE Flange (45° Elbow) / Code 62

Bride SAE coude 45° pré-sertie série 6000 PSI

Flangia 45° compatta SAE 6000

DN	Ø	Part n° Referencia	€
1"1/4	1"1/4	Z692842020	244,68
1"1/2	1"1/2	Z692842424	388,08
2"	2"	Z692843232	559,64

CONEXIONES UNA PIEZA SERIE BW+ R13/R15 NO PELAR

One piece fittings BW+ Series R13/R15 No Skive
Embouts R13/R15 Série BW+ Sans denuder
Raccordi R13/R15 Serie BW+ senza spellatura

R13 & R15 Ø 3/4" - 1" –>> BWS

Machos cilíndricos una sola pieza BSP 60°

NEW

One piece BSP Male 60° cone

Mâle pré-serti gaz cylindrique BSP 60°

Maschio compatto BSP cilindrico sede 60°

DN	THREAD ROSCA	Part n° Referencia	€
1"1/4	1"1/4 BSP	**Z691122020**	**171,44**
1"1/2	1"1/2 BSP	**Z691122424**	**237,66**
2"	2" BSP	**Z691123232**	**419,66**

Hembras giratorias 90° una sola pieza BSP 60° C/J

NEW

One piece BSP Swivel female 60° cone with o'ring (90° Elbow)

Coude 90° femelle pré-sertie BSP 60° avec o'ring

Femmina 90° compatta BSP sede 60° con o'ring

DN	THREAD ROSCA	Part n° Referencia	€
1"1/4	1"1/4 BSP	**Z691172020**	**216,17**
1"1/2	1"1/2 BSP	**Z691172424**	**302,72**
2"	2" BSP	**Z691173232**	**511,14**

Hembras giratorias una sóla pieza BSP 60° doble hexagonal con jun

NEW

One piece double hexagonal BSP Swivel female cone 60° with o´ring

Femelle BSP pré-sertie cone 60° double hexagonal with o'ring

Femmina diritta compatta BSP sede 60° doppio esagono con guarnizione

DN	THREAD ROSCA	Part n° Referencia	€
1"1/4	1"1/4 BSP	**Z694102020**	**258,41**
1"1/2	1"1/2 BSP	**Z694102424**	**352,18**
2"	2" BSP	**Z694103232**	**662,70**

Hembras giratorias 45° una sola pieza BSP 60° C/J

NEW

One piece BSP Swivel female 60° cone with o'ring (45° Elbow)

Coude 45° femelle pré-sertie BSP 60° avec o'ring

Femmina 45° compatta BSP sede 60° con o'ring

DN	THREAD ROSCA	Part n° Referencia	€
1"1/4	1"1/4 BSP	**Z691182020**	**216,17**
1"1/2	1"1/2 BSP	**Z691182424**	**302,72**
2"	2" BSP	**Z691183232**	**511,14**

BAJO CONSULTA UNDER REQUEST

BW+ MÉTRICAS / METRIC BW+

- Hembras giratorias rectas una sola pieza rosca Métrica cono 24° con junta tórica
  One piece Metric swivel female 24° seat with o'ring

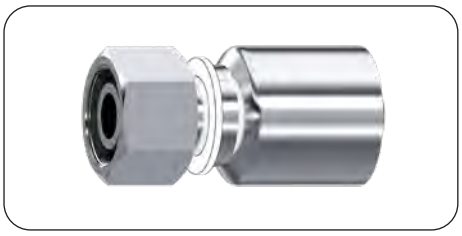

Ref: Z69204

- Hembras giratorias 90° una sola pieza Métricas cono 24° con junta tórica
  One piece Metric swivel female 24° seat with o'ring

Ref: Z69205

- Macho una sola pieza Métricos cono 24°

  One piece Metric male stud 24° cone

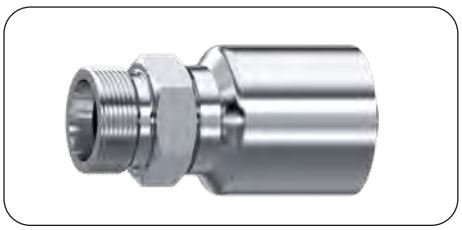

Ref: Z69203

- Hembras giratorias 45° una sola pieza Métricas cono 24° con junta tórica
  One piece Metric swivel female 24° seat with o'ring

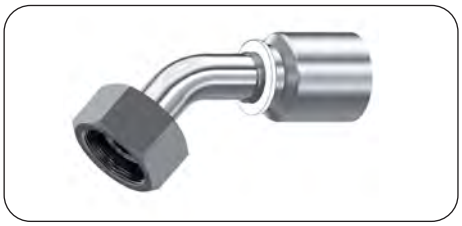

Ref: Z69206

CASQUILLOS PARA CONEXIONES UNA SOLA PIEZA

Ferrules for one piece fittings
Jupes pour embouts pré-sertis
Boccole per raccordi compatti

Casquillos R1AT/R2AT/1SN/2SN /R16/2SC/R17 una sola pieza serie 43

Ferrules R1AT/R2AT/1SN/2SN/R16/2SC/R17 for one piece fittings 43 series
Jupes R1AT/R2AT/1SN/2SN/R16/2SC/R17 pour embous pré-sertis série 43
Boccole a pressare R1AT/R2AT/1SN/2SN/R16/2SN/R17 per raccordi compatti serie 43

DN	Referencia Part n°	€
1/4"	ZPFC221200400	10,30
5/16"	ZPFC221200500	13,93
3/8"	ZPFC221200600	13,47
1/2"	ZPFC221200800	14,09
5/8"	ZPFC221201000	17,34
3/4"	ZPFC221201200	24,38
1"	ZPFC221201600	41,95
1"1/4	ZPFC221202000	73,70
1"1/2	ZPFC221202400	88,52
2"	ZPFC221203200	128,19

Casquillos 3SP/4SP/R12/4SH serie standard no pelar

Ferrules 3SP/4SP/R12/4SH standard series non skive
Jupes 3SP/4SP/R12/4SH série standard sans dénudage
Boccole a pressare per 3SP/4SP/R12/4SH per Standard Serie senza spellatura

DN		Referencia Part n°	€
3/8"		ZPF222400600	10,84
1/2"		ZPF222400800	13,69
5/8"		ZPF222401000	25,13
3/4"		ZPF222401200	22,46
1"		ZPF222401600	35,03
1" 1/4		ZPF222402000	65,75
1" 1/2	NEW	ZPF222402400	94,12
2"	NEW	ZPF222403200	133,77

Casquillos R7, R8 y elastómero malla metálica una sola pieza

Ferrules R7, R8 and braid of steel wire for one piece fittings
Jupes R7, R8 et elastomère tresse métallique pour embouts pre-sertis
Boccole a pressare R7, R8 per raccordi compatti

DN	Referencia Part n°	€
3/16"	880120300	8,33
1/4"	880120400	8,75
5/16"	880120500	10,00
3/8"	880120600	10,33
1/2"	880120800	11,72
3/4"	880121200	17,39
1"	880121600	29,50

Casquillos PTFE Liso una sola pieza

Ferrules smooth PTFE for one piece fittings
Jupes PTFE Lisse pour embouts pre-sertis
Boccole a pressare PTFE liscio per raccordi compatti

DN	Referencia Part n°	€
1/4"	880400400	6,81
5/16"	880400500	8,59
3/8"	880400600	8,07
1/2"	880400800	9,02
5/8"	880401000	17,01

Para otras medidas, usar 81040 p.24 / *For other sizes, use 81040 p.24* / Pour les autres dimensions, utiliser 81040 p.24 / *Per altre dimensioni, usare 81040 p.24*

Casquillos PTFE Corrugado una sola pieza

Ferrules convoluted PTFE for one piece fittings
Jupes PTFE Convoluté pour embouts pre-sertis
Boccole a pressare PTFE corrugato per raccordi compatti

DN	Referencia Part n°	€
1/4"	880410400	8,05
5/16"	880410500	7,28
3/8"	880410600	8,28
1/2"	880410800	10,94
5/8"	880411000	14,82
3/4"	880411200	17,41

Para otras medidas, usar 81041 p.24 / *For other sizes, use 81041 p.24* / Pour les autres dimensions, utiliser 81041 p.24 / *Per altre dimensioni, usare 81041 p.24*

Casquillos 1SC/1SN/2SC/R6

Ferrules 1SC/1SN/2SC/R6
Jupes 1SC/1SN/2SC/R6
Boccole a pressare per 1SC/1SN/2SC/R6

DN	Referencia Part n°	€
1/4"	ZSCC21120400	10,06
5/16"	ZSCC21120500	12,74
3/8"	ZSCC21120600	12,22
1/2"	ZSCC21120800	13,89
5/8"	ZSCC21121000	18,94
3/4"	ZSCC21121200	25,55
1"	ZSCC21121600	40,05

CASQUILLOS PARA CONEXIONES UNA SOLA PIEZA

Ferrules for one piece fittings
Jupes pour embouts pré-sertis
Boccole per raccordi compatti

Casquillos R12/4SP/4SH para serie BW

Ferrules R12/4SP/4SH for fittings BW series

Jupes R12/4SP/4SH pour embouts série BW

Boccole a pressare per R12/4SP/4SH per raccordi serie BW

DN	Referencia Part n°	€
1/2"	ZAC680100800	26,11
5/8"	ZAC680101000	28,67
3/4"	ZAC680101200	36,60
1"	ZAC680101600	47,04
1"1/4	ZAC680102000	72,77
1"1/2	ZAC680102400	106,05
2"	ZAC680103200	158,78

Hasta fin de existencias / *Until end of stock* / Jusqu'à la fin du stock / *Fino ad esaurimento*

Casquillos R13/R15 para serie BW/BW+

NEW

Ferrules R13/R15 for fittings BW/BW+ series

Jupes R13/R15 pour embouts série BW/BW+

Boccole a pressare per R13/R15 per raccordi serie BW/BW+

DN	Part n° Referencia	€
1"1/4	ZAC690102000	88,23
1"1/2	ZAC690102400	110,31
2"	ZAC690103200	162,24

CONEXIONES REUSABLES

Reusable series
Embouts série récupérable
Serie Recuperabile

Casquillos reus para manguera R1T/1SN no pelar

Reusable ferrules R1T/1SN non skive

Jupes récuperables R1T/1SN sans dénudage

Boccola recuperabile per R1T senza pelatura

DN	Referencia Part n°	€
1/4"	**Z1G-4 R1T INOX**	**33,33**
5/16"	**Z1G-5 R1T INOX**	**46,14**
3/8"	**Z1G-6 R1T INOX**	**29,33**
1/2"	**Z1G-8 R1T INOX**	**37,05**
3/4"	**Z1G-12 R1T INOX**	**49,12**
1"	**Z1G-16 R1T INOX**	**74,02**

Casquillos reus para manguera R2AT/2SN no pelar

Reusable ferrules R2AT/2SN non skive

Jupes récuperables R2AT/2SN sans dénudage

Boccola recuperabile per R2AT/2SN senza pelatura

DN	Referencia Part n°	€
1/4"	**Z1G-4 R2T INOX**	**34,26**
3/8"	**Z1G-6 R2T INOX**	**28,20**
1/2"	**Z1G-8 R2T INOX**	**31,69**
5/8"	**Z1G-10 R2T INOX**	**51,64**
3/4"	**Z1G-12 R2T INOX**	**60,85**
1"	**Z1G-16 R2T INOX**	**79,95**

Hembras giratorias rectas reusables rosca BSP cono 60°

Reusable BSP Swivel female 60° cone

Femelle récuperable gaz cylindrique 60°

Femmina diritta BSP sede 60° recuperabile

DN	ROSCA THREAD	Referencia Part n°	€
1/4"	1/4" BSP	**Z3G-4**	**34,76**
5/16"	3/8" BSP	**Z3G-6-5**	**38,65**
3/8"	3/8" BSP	**Z3G-6**	**37,32**
3/8"	1/2" BSP	**Z3G-8-6**	**45,10**
1/2"	1/2" BSP	**Z3G-8**	**43,32**
3/4"	3/4" BSP	**Z3G-12**	**65,90**
1"	1" BSP	**Z3G-16**	**112,69**
1"1/4	1"1/4 BSP	**Z3G-20***	**219,56**
1"1/2	1"1/2 BSP	**Z3G-24***	**265,64**

***Hasta fin de existencias** / *Until end of stock* / Jusqu´à la fin du stock / *Fino ad esaurimento*

Hembras giratorias 90° reusables rosca BSP cono 60°

Reusable BSP 60° cone (90° Elbow)

Coude 90° femelle récuperable gaz cylindrique BSP 60°

Femmina 90° BSP sede 60° recuperabile

DN	ROSCA THREAD	Referencia Part n°	€
1/4"	1/4" BSP	**Z90G-4**	**61,86**
3/8"	3/8" BSP	**Z90G-6**	**74,12**
3/8"	1/2" BSP	**Z90G-8-6**	**97,12**
1/2"	1/2" BSP	**Z90G-8**	**91,65**
3/4"	3/4" BSP	**Z90G-12**	**123,26**
1"	1" BSP	**Z90G-16**	**194,06**

Machos reusables rosca cilíndrica BSP cono 60°

Reusable BSP Male parallel 60° cone

Mâle récuperable gaz cylindrique BSP 60°

Maschio BSP cilindrico sede 60° recuperabile

DN	ROSCA THREAD	Referencia Part n°	€
1/4"	1/4" BSP	**Z2G-4**	**41,71**
3/8"	3/8" BSP	**Z2G-6-5**	**49,63**
3/8"	3/8" BSP	**Z2G-6**	**37,62**
1/2"	1/2" BSP	**Z2G-8-6**	**44,71**
1/2"	1/2" BSP	**Z2G-8**	**41,48**
3/4"	3/4" BSP	**Z2G-12**	**68,36**
1"	1" BSP	**Z2G-16**	**89,23**

CONEXIONES REUSABLES

Reusable series
Embouts série récupérable
Serie Recuperabile

Hembras giratorias rectas reusables rosca JIC cono 37°

Reusable JIC 37° straight Swivel female

Femelle droite récuperable JIC 37°

Femmina dirritta JIC sede 37° recuperabile

DN	ROSCA THREAD	Referencia Part n°	€
1/4"	7/16" 20h UNF	**Z3J-07-04**	**38,23**
3/8"	9/16" 18h UNF	**Z3J-09-06**	**41,04**
1/2"	3/4" 16h UNF	**Z3J-12-08**	**47,66**
1/2"	7/8" 14h UNF	**Z3J-14-08**	**66,50**
5/8"	7/8" 14h UNF	**Z3J-14-10**	**57,82**
3/4"	1"1/16 12h UNF	**Z3J-17-12**	**73,94**
1"	1"5/16 12h UNF	**Z3J-21-16**	**123,95**

Machos reusables rosca JIC cono 37°

Reusable JIC Male 37° cone

Mâle récuperables JIC cône 37°

Maschio JIC 37°

DN	ROSCA THREAD	Referencia Part n°	€
1/4"	7/16" 20h UNF	**Z2J-07-04**	**39,97**
3/8"	9/16" 18h UNF	**Z2J-09-06**	**42,26**
1/2"	3/4" 16h UNF	**Z2J-12-08**	**49,43**
1/2"	7/8" 14h UNF	**Z2J-14-08**	**72,61**
5/8"	7/8" 14h UNF	**Z2J-14-10**	**71,98**
3/4"	1"1/16" 12h UNF	**Z2J-17-12**	**78,61**
1"	1" 5/16" 12h UNF	**Z2J-21-16**	**130,77**

Hembras giratorias 90° reusables rosca JIC cono 37°

90° reusable Swivel female thread JIC cone 37 °

Femelle tournante 90° filetage récuperable cône JIC 37 °

90° riutilizzabile Femmina girevole Filetto cono JIC 37 °

DN	ROSCA THREAD	Referencia Part n°	€
1/4"	7/16" 20h UNF	**Z3J90-07-04**	*
3/8"	9/16" 18h UNF	**Z3J90-09-06**	*
1/2"	3/4" 16h UNF	**Z3J90-12-08**	*
1/2"	7/8" 14h UNF	**Z3J90-14-08**	*
5/8"	7/8" 14h UNF	**Z3J90-14-10**	*
3/4"	1"1/16 12h UN	**Z3J90-17-12**	*
1"	1"5/16 12h UN	**Z3J90-21-16**	*

Hembras giratorias 45° reusables rosca JIC cono 37°

45° reusable Swivel female thread JIC cone 37 °

Femelle tournante 45° filetage récuperable cône JIC 37 °

45° riutilizzabile Femmina girevole Filetto cono JIC 37 °

DN	ROSCA THREAD	Referencia Part n°	€
1/4"	7/16" 20h UNF	**Z3J45-07-04**	*
3/8"	9/16" 18h UNF	**Z3J45-09-06**	*
1/8"	3/4" 16h UNF	**Z3J45-12-08**	*
1/2"	7/8" 14h UNF	**Z3J45-14-08**	*
5/8"	7/8" 14h UNF	**Z3J45-14-10**	*
3/4"	1"1/16 12h UN	**Z3J45-17-12**	*
1"	1"5/16 12h UN	**Z3J45-21-16**	*

Machos reusables rosca NPT

Reusable NPT Male

Mâle récuperable NPT

Maschio NPT recuperabile

DN	ROSCA THREAD	Referencia Part n°	€
1/4	1/4" NPT	**Z2NPT-04-04**	**33,02**
3/8	3/8" NPT	**Z2NPT-06-06**	**35,53**
1/2	1/2" NPT	**Z2NPT-08-08**	**39,41**
3/4	3/4" NPT	**Z2NPT-12-12**	**64,94**
1"	1" NPT	**Z2NPT-16-16**	**84,77**

Espigas lisas Métricas reusables

Reusable Metric standpipe

Embout lisse récuperable Métrique

Estremitá tubolare recuperabile

DN	TUBO PIPE	Referencia Part n°	€
1/4"	6	**ZE-6-4**	**32,42**
1/4"	8	**ZE-8-4**	**30,85**
3/8"	8	**ZE-8-6**	**29,96**
1/4"	10	**ZE-10-4**	**30,85**
5/16"	10	**ZE-10-5**	**31,28**
3/8"	10	**ZE-10-6**	**44,84**
5/16"	12	**ZE-12-5**	**31,28**
3/8"	12	**ZE-12-6**	**44,84**
3/8"	15	**ZE-15-6**	**44,84**
1/2"	15	**ZE-15-8**	**44,01**
1/2"	16	**ZE-16-8**	**43,98**
3/4"	22	**ZE-22-12**	**66,68**
3/4"	25	**ZE-25-12**	**92,40**
1"	25	**ZE-25-16**	*
1"	28	**ZE-28-16**	*
1"	30	**ZE-30-16**	*

*Consultar / On request / Sur demande / Su richiesta

CONEXIONES REUSABLES

Reusable series
Embouts série récupérable
Serie Recuperabile

Hembras giratorias rectas reusables R5 rosca JIC cono 37°

Reusable R5 JIC 37 ° straight swivel female

Femelle pivotante droite réutilisable R5 JIC filetage 37 ° cône

Femmina diritta girevole recuperabile per R5 filetto JIC cono 37 °

DN	ROSCA THREAD	Referencia Part n°	€
3/16"	7/16" 20 UNF	**Z3J-07-04-R5**	**40,29**
1/4"	7/16" 20h UNF	**Z3J-07-05-R5**	**40,72**
1/4"	1/2" 20h UNF	**Z3J-08-05-R5**	**42,71**
5/16"	9/16" 18h UNF	**Z3J-09-06-R5**	**43,18**
13/32"	3/4" 16h UNF	**Z3J-12-08-R5**	**50,86**
1/2"	3/4" 16h UNF	**Z3J-12-10-R5**	**63,91**
1/2"	7/8"x14 UNF	**Z3J-14-10-R5**	**66,33**
5/8"	1" 1/16" 12 UNF	**Z3J-17-12-R5**	**80,52**
7/8"	1" 5/16" 12 UNF	**Z3J-21-16-R5**	**126,23**
1"1/8	1" 5/8 12 UNF	**Z3J-26-20-R5**	**294,21**
1"3/8	1" 7/8 12 UNF	**Z3J-30-24-R5**	**331,40**
1"13/16	2" 1/2 12UNF	**Z3J-40-32-R5**	**483,21**

Hembras giratorias 90° reusables R5 rosca JIC cono 37°

Reusable R5 JIC 37 ° swivel female (90° elbow)

Femelle pivotante 90° filetage R5 réutilisable cône JIC 37 °

Femmina girevole 90 ° recuperabile per R5 filetto JIC cono 37 °

DN	ROSCA THREAD	Referencia Part n°	€
3/16"	7/16" 20 UNF	**Z3J90-07-04-R5**	*
1/4"	7/16" 20h UNF	**Z3J90-07-05-R5**	*
1/4"	1/2" 20h UNF	**Z3J90-08-05-R5**	*
5/16"	9/16" 18h UNF	**Z3J90-09-06-R5**	*
13/32"	3/4" 16h UNF	**Z3J90-12-08-R5**	*
1/2"	3/4" 16h UNF	**Z3J90-12-10-R5**	*
1/2"	7/8" 14 UNF	**Z3J90-14-10-R5**	*
5/8"	1" 1/16 12 UNF	**Z3J90-17-12-R5**	*
7/8"	1" 5/16" 12 UNF	**Z3J90-21-16-R5**	*

Hembras giratorias 45° reusables R5 rosca JIC cono 37°

Reusable R5 JIC 37 ° swivel female (45° elbow)

Femelle pivotante 45° réutilisable Filetage R5 Cône JIC 37 °

Femmina 45° girevole recuperabile per R5 filetto JIC cono 37 °

DN	ROSCA THREAD	Referencia Part n°	€
3/16"	7/16" 20 UNF	**Z3J45-07-04-R5**	*
1/4"	7/16" 20h UNF	**Z3J45-07-05-R5**	*
1/4"	1/2" 20h UNF	**Z3J45-08-05-R5**	*
5/16"	9/16" 18h UNF	**Z3J45-09-06-R5**	*
13/32"	3/4" 16h UNF	**Z3J45-12-08-R5**	*
1/2"	3/4" 16h UNF	**Z3J45-12-10-R5**	*
1/2"	7/8" 14 UNF	**Z3J45-14-10-R5**	*
5/8"	1" 1/16 12 UNF	**Z3J45-17-12-R5**	*
7/8"	1" 5/16" 12 UNF	**Z3J45-21-16-R5**	*

Machos reusables R5 rosca NPT

Reusable R5 NPT Male

Mâle récuperables R5 NPT

Maschio R5 NPT recuperabile

DN	ROSCA THREAD	Referencia Part n°	€
3/16"	1/4" NPT	**Z2P-04-04-R5**	**38,30**
1/4"	1/4" NPT	**Z2P-04-05-R5**	**39,83**
5/16"	3/8" NPT	**Z2P-06-06-R5**	**40,50**
13/32"	1/2" NPT	**Z2P-08-08-R5**	**45,71**
1/2"	1/2" NPT	**Z2P-08-10-R5**	**55,54**
5/8"	3/4" NPT	**Z2P-12-12-R5**	**75,34**
7/8"	1" NPT	**Z2P-16-16-R5**	**98,33**
1" 1/8	1" 1/4 NPT	**Z2P-20-20-R5**	**128,89**
1" 3/8	1" 1/2 NPT	**Z2P-24-24-R5**	**212,23**
1" 13/16	2" NPT	**Z2P-32-32-R5**	**347,95**

CONEXIONES REUSABLES R5

REUSABLE R5 FITTINGS

Consulta datos en nuestra ficha técnica | Check our technical sheet for data

Sistemas hidráulicos de **media presión** con fluidos basados en petróleo o agua/ glycol, aceites y lubricantes.

Medium pressure *hydraulic systems with petroleum or water/glycol based fluids and for fuel and lubricating oils*

***Consultar** / On request **/ Sur demande** / Su richiesta

CONEXIONES PUSH-ON

Push-On Fittings
Embouts Push-On
Raccordi Serie Push-On

Hembras giratorias rectas rosca BSP cono 60°

BSP Swivel female 60° cone

Femelle tournante BSP cone 60°

Femmina diritta BSP sede 60°

DN	ROSCA THREAD	Referencia Part n°	€
1/4"	1/4" BSP	891000404	18,96
3/8"	3/8" BSP	891000606	17,37
1/2"	1/2" BSP	891000808	21,90
5/8"	5/8" BSP	891001010	40,68
3/4"	3/4" BSP	891001212	28,11
1"	1" BSP	891001616	44,51

Machos rosca cilíndrica BSP cono 60°

BSP Male 60° cone

Mâle fixe BSP cone 60°

Maschio BSP cilindrico sede 60°

DN	ROSCA THREAD	Referencia Part n°	€
1/4"	1/4" BSP	891120404	20,22
3/8"	3/8" BSP	891120606	17,30
1/2"	1/2" BSP	891120808	27,92
3/4"	1/2" BSP	891120812	39,75
5/8"	5/8" BSP	891121010	33,74
3/4"	3/4" BSP	891121212	46,65
1"	1" BSP	891121616	55,71

Hembras giratorias rectas JIC 37°

JIC 37° Swivel female

Femelle tournante JIC 37°

Femmina diritta JIC sede 37°

DN	ROSCA THREAD	Referencia Part n°	€
1/4"	7/16" 20h UNF	891420704	14,94
3/8"	9/16" 18h UNF	891420906	18,47
1/2"	3/4" 16h UNF	891421208	21,72
5/8"	7/8" 14h UNF	891421410	24,72
3/4"	1"1/16 12h UN	891421712	38,60
1"	1"5/16 12h UN	891422116	47,82

Machos rosca JIC cono 37°

JIC 37° Male

Mâle fixe JIC 37°

Maschio JIC sede 37°

DN	ROSCA THREAD	Referencia Part n°	€
1/4"	7/16" 20h UNF	891400704	18,32
3/8"	9/16" 18h UNF	891400906	25,36
1/2"	3/4" 16h UNF	891401208	25,16
5/8"	7/8" 14h UNF	891401410	35,57
3/4"	1"1/16 12h UN	891401712	42,47
1"	1"5/16 12h UN	891402116	52,08

Machos rosca cónica NPT

NPT Male pipe straight

Mâle gaz conique NPT (BRIGGS)

Maschio NPT conico

DN	ROSCA THREAD	Referencia Part n°	€
1/4"	1/4" NPT	891610404	15,72
3/8"	3/8" NPT	891610606	21,94
1/2"	1/2" NPT	891610808	25,85
3/4"	3/4" NPT	891611212	38,13
1"	1" NPT	891611616	45,79

Hembra giratoria recta Métrica cono 24°

Metric female swivel with o´ring 24° cone

Femelle Métrique avec o´ring cône 24°

Femmina Metrica sede 24° con o´ring

DN	TUBO PIPE	SERIE SERIES	ROSCA THREAD	Referencia Part n°	€
1/4"	8	L	M14x1.5	89804140804	21,44
1/4"	10	L	M16x1.5	89804161004	20,54
3/8"	12	L	M18x1.5	89804181206	19,58
1/2"	15	L	M22x1.5	89804221508	22,81
3/4"	22	L	M30x2	89804302212	35,03

Machos rosca métrica cono 24°

Metric stud 24° cone

Mâle Métrique cône 24°

Maschio Metrico sede 24°

DN	TUBO PIPE	SERIE SERIES	ROSCA THREAD	Referencia Part n°	€
1/4"	8	L	M14x1.5	89203140804	25,04
1/4"	10	L	M16x1.5	89203161004	18,86
3/8"	12	L	M18x1.5	89203181206	19,81
1/2"	15	L	M22x1.5	89203221508	27,47
3/4"	22	L	M30x2	89203302212	35,41

CONEXIONES ALTA PRESIÓN (700 BAR)

High pressure 700 bar fittings
Embouts haute pression 700 bar
Raccordi Altissima pressione (700 bar)

Casquillos para alta presión (700bar)

Ferrules for thermoplastic hose 700 bar

Jupes à sertir thermoplastique 700 bar

Boccole per tubo termoplastico 700 bar

DN	Referencia Part n°	€
1/4"	Z710120400	35,24
3/8"	Z710120600	36,64
1/2"	Z710120800	38,84

Hembra giratoria BSP cono 60° (700bar)

BSP Swivel female 60° cone 700 bar

Embout 700 bar femelle tournante gaz cyl BSP 60°

Femmina diritta BSP sede 60° 700 bar

DN	ROSCA THREAD	Referencia Part n°	€
1/4"	1/4" BSP	Z741000404	60,83
3/8"	3/8" BSP	Z741000606	64,00
1/2"	1/2" BSP	Z741000808	66,57

Macho BSP cono 60° (700bar)

BSP Male parallel 60° cone 700 bar

Embout 700 bar mâle fixe gaz cyl BSP 60°

Maschio cilindrico BSP sede 60° 700 bar

DN	ROSCA THREAD	Referencia Part n°	€
1/4"	1/4" BSP	Z741120404	70,15
3/8"	3/8" BSP	Z741120606	72,45
1/2"	1/2" BSP	Z741120808	78,49

Hembra giratoria NPSM cono 60° (700bar)

NPSM Swivel female 60° cone 700 bar

Embout 700 bar femelle tournante NPSM 60°

Femmina diritta NPSM sede 60° 700 bar

DN	ROSCA THREAD	Referencia Part n°	€
1/4"	1/4" 18h NPSM	Z742610404	60,83
3/8"	3/8" 18h NPSM	Z742610606	67,37
1/2"	1/2" 14h NPSM	Z742610808	70,08

Macho NPT (700bar)

NPT Male pipe straight 700 bar

Embout 700 bar mâle fixe gaz conique NPT

Maschio conico NPT 700 bar

DN	ROSCA THREAD	Referencia Part n°	€
1/4"	1/4" NPT	Z741610404	70,15
1/4"	3/8" NPT	Z741610604	76,07
3/8"	3/8" NPT	Z741610606	72,45
1/2"	1/2" NPT	Z741610808	78,49

Hembra giratoria JIC 37° (700bar)

JIC 37° Swivel female 700 bar

Embout 700 bar femelle tournante droit JIC 37°

Femmina JIC 37° 700 bar

DN	ROSCA THREAD	Referencia Part n°	€
1/4"	7/16" 20h UNF	Z741420704	66,91
1/4"	9/16" 18h UNF	Z741420904	74,77
3/8"	9/16" 18h UNF	Z741420906	70,40
1/2"	3/4" 16h UNF	Z741421208	73,24

Macho JIC 37° (700bar)

JIC 37° Male thread 700 bar

Embout 700 bar mâle fixe JIC 37°

Maschio JIC 37° 700 bar

DN	ROSCA THREAD	Referencia Part n°	€
1/4"	7/16" 20h UNF	Z741400704	81,23
3/8"	9/16" 18h UNF	Z741400906	83,88
1/2"	3/4" 16h UNF	Z741401208	90,89

Hembra giratoria Métrica 24° (700bar)

Metric Swivel female 24° cone 700 bar

Embout 700 bar femelle tournante droit Métrique cone 24°

Femmina diritta Metrica sede 24° 700 bar

DN	TUBO PIPE	SERIE SERIES	ROSCA THREAD	Referencia Part n°	€
1/4"	8	S	M16x1.5	Z74804160804	87,54
3/8"	12	S	M20x1.5	Z74804201206	89,47
1/2"	16	S	M24x1.5	Z74804241608	90,33

Macho Métrico 24° (700bar)

Metric Male 24° cone 700 bar

Embout 700 bar mâle fixe Métrique cone 24°

Maschio cilindrico Metrico sede 24° 700 bar

DN	TUBO PIPE	SERIE SERIES	ROSCA THREAD	Referencia Part n°	€
1/4"	8	S	M16x1.5	Z74203160804	93,79
3/8"	12	S	M20x1.5	Z74203201206	104,84
1/2"	16	S	M24x1.5	Z74203241608	116,95

DICSA
e·digital

TABLAS DE PRENSADO Y CERTIFICADOS

disponibles en el área de DESCARGAS de nuestra web

www.dicsaes.com

CRIMPING CHARTS & CERTIFICATES

available in the DOWNLOAD area

Hose configurator +

ASISTENTE LATIGUILLOS

makes your work easier

Gestión intuitiva, rápida, fiable y eficiente

Simple, fast, reliable and efficient management

ELIGE LA MANGUERA	CHOOSE THE HOSE
+	+
SELECCIONA LAS CONEXIONES	SELECT THE FITTINGS
+	+
ELIGE LAS PROTECCIONES	CHOOSE THE PROTECTIONS
=	=
PEDIDO FINAL	ORDER

Póngase en contacto con nosotros para más información
Contact us for further information

MÁQUINAS Y ACCESORIOS

Machines & Accessories
Machines et Accessoires
Macchine e Accessori

PM 18 6J N

80 t
+20 mm
59 mm
28 kg.

TrAle®
1" 2SP
3/4" 4SP
1/2" 6SP

PM16-SPEED-8J | PM16-8J

100 t
+20 mm
59 mm
25 kg.

TrAle®
1" 3SP

PM18F-9J

120 t
+20 mm
65 mm
22 kg.

TrAle®
1" 4SP

PM22-9J

140 t
+25 mm
110 mm

TrAle®
1"1/4 4SP

PE 38 15j NT

220 t
+32 mm
130 mm

TrAle®
2" 4 SP
1" 6SP

PE 50 17J NT

420 t
+32mm
130 mm

TrAle®
2" 6 SP

SE 28 5j N/10J N

137 t
+28 mm
100 mm

TrAle®
1"1/4 4SP

PE 38 12 J N

240 t
+38 mm
118 mm

TrAle®
2" 4 SP
1" 6SP

PE 58 14J N | PE 58 14J 5.5 N

350 t
+54 mm
180 mm

TrAle®
2" 6 SP
3" 2 SP

Accesorios para prensas · Accessories for crimping machines

M PE 38 NT

SPEBD N

EGN | EGNT

PEDAL

Garras especiales
Special dies

MÁQUINAS Y ACCESORIOS

Machines & Accessories
Machines et Accessoires
Macchine e Accessori

CHMT-20 N

Ø Max. 50mm

2,2 Kw

Ø 250 mm

TrAle® 1"1/4 *4SP*

CHM4-32 N

Ø Max. 75mm

3 Kw

Ø 250 mm

TrAle® 2" *4SP*

HOSE CUTTING BLADES

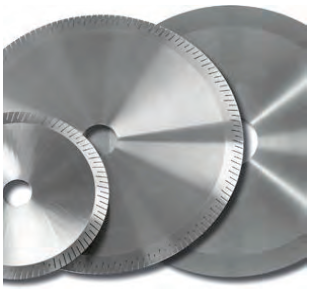

Disponibles múltiples perfiles de discos
Available several profiles blades

PB-32N

2"

R.P.M 300

0.75 Kw

TrAle® 2"

Útiles / Tools

Portaherramientas
Tool holder

PMT 2

2"

Peladora Manual
Manual hose skiving

PRO7

Carga máx. recomendada / bandeja: 70 Kg.

Carga total recomendada: 490 Kg.

Each holder max 70 kg

Total max. capacity: 490 kg

PCM3

Carga máx. rollo: 35 Kg.

Each roll max 35 kg

DESCUBRE NUESTRO CATÁLOGO DE MÁQUINAS

DISCOVER OUR MACHINE CATALOGUE

ROLLER

Roller
Roller
Roller

Roller retráctil Inox

Stainless Steel Retractable Roller

Roller rétractable Acier Inox

Roller retrattile Inox

THREAD ROSCA	PRESSURE (bar) PRESIÓN (bar)	MAX HOSE LENGHT LONG. MÁX MANG.		Part n° Referencia	€
3/8" BSP	180	15 m - DN 3/8"	NEW	**ZRRHG06**	*
1/2" BSP	180	15 m - DN 1/2"	NEW	**ZRRHG08**	*

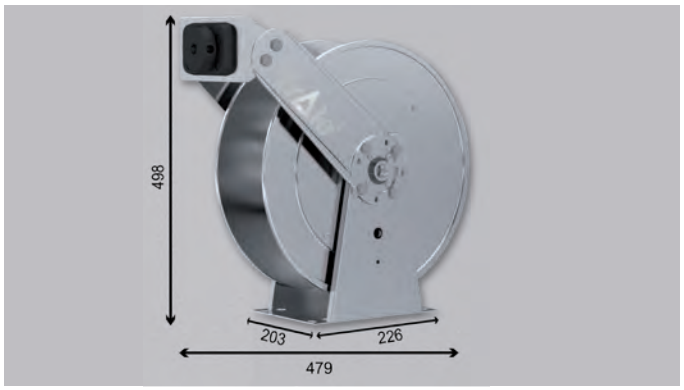

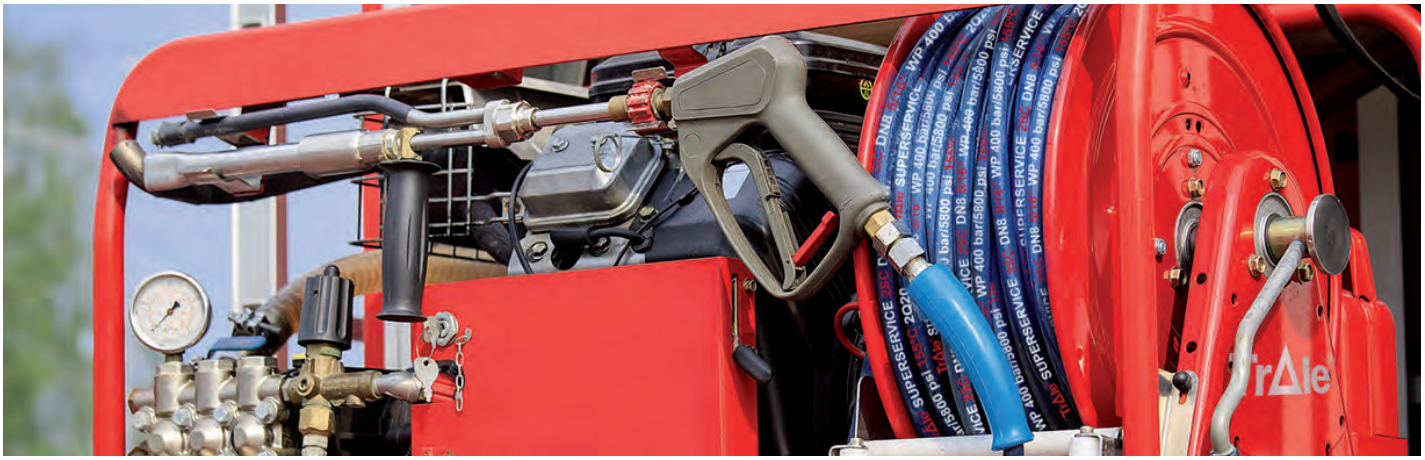

MÁS MODELOS EN ACERO CARBONO

Carbon Steel Hose Reels Also Available

***Consultar** / On request / **Sur demande** / Su richiesta

MÁQUINAS Y ACCESORIOS

Machines & Accessories
Machines et Accessoires
Macchine e Accessori

S01

R.P.M. 50 · 0.18 Kw · Ø 6- 42 mm · 30 kg

Útiles de desbarbado incluidos

Deburring tools included

USFL/01 MAN

6 → 42 x 4 mm

DIN 2353 · JIC 37°

USFL/01

6 → 42 x 4 mm · 0,75 Kw

DIN 2353 · JIC 37°

M18 6-18

6 → 18 mm

Manual bending machine

Dobladora manual

CMS42

6 → 42 x 4 mm

With tool-holder cabinet
Con soporte

C42

6 → 42 x 4 mm · 1.1 Kw

Electric bending machine with cabinet
Dobladora eléctrica con mueble

Útiles para las máquinas de doblado y montaje de racores · Pipe fittings for bending & assembly Machines

CUC42

Matrices de doblado
Bending tools

FT37

Matrices JIC 37°
Tools JIC 37°

BL

JIC 37°

Bloque BL JIC 37°
BL Block JIC 37°

PLT + SU

DIN 2353

Machos y matrices DIN 2353
Sockets & plates DIN 2353

CEN-MINI

1.7 Kw max.

210 kg.

Mini
Mini

Pequeño y económico

Small & inexpensive

CEN-JU

4.6 Kw max. · 220 l/min. AIR

300 kg.

Ma

Comple
Complet

Con corte & aire comprimido

With cutting & compressed air

TUBO TRΔLE® MÉTRICO 108
TrΔle® metric pipe
Tube rigide TrΔle® métrique
Tubo rigido TrΔle® metrico

RACORES DIN 2353 109
DIN 2353 Pipe fittings
Raccords à bague DIN 2353
Raccordi DIN 2353

RACORES JIC 37° 131
Flare fittings JIC 37°
Adapteurs JIC 37°
Raccordi JIC 37°

02

TUBO RÍGIDO TRALE®

Pipe fittings
Raccord tube rigide
Raccordi ad anello

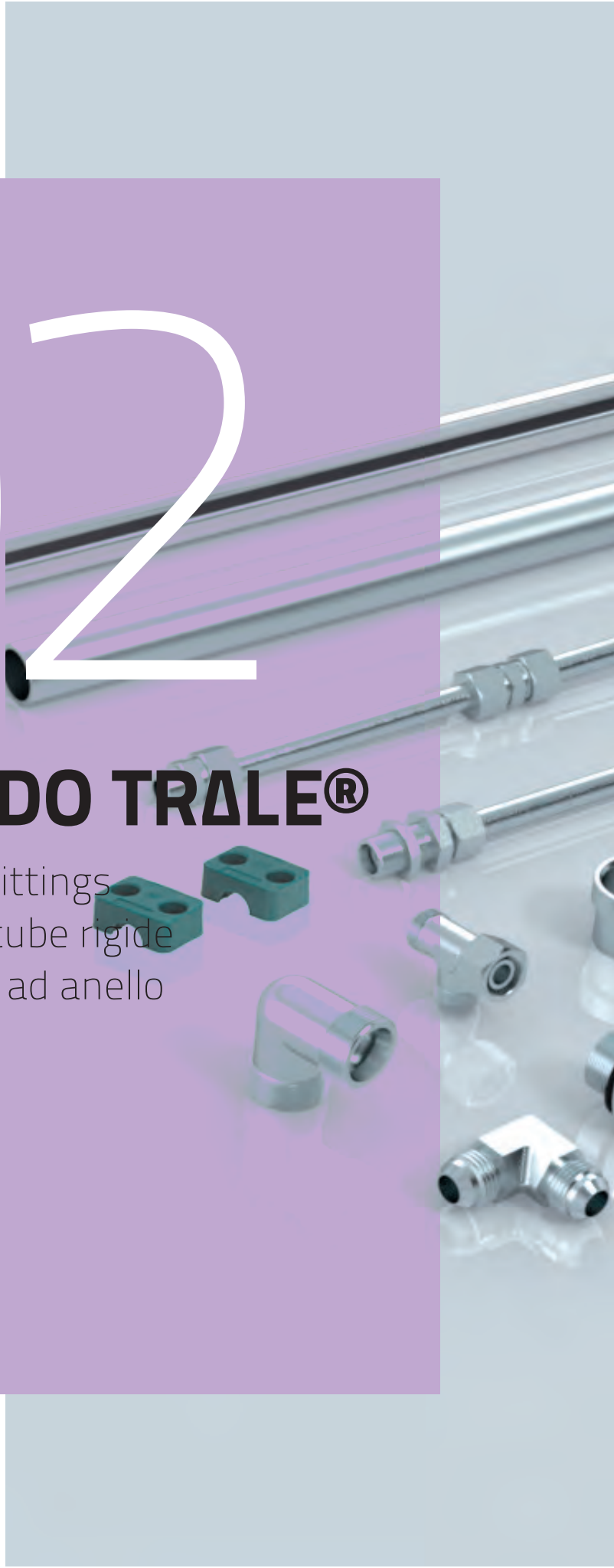

TrAle®

MARINE EQUIPMENT DIRECTIVE
DNV
2014/90/EU

RACORES FABRICADOS POR DICSA
PIPE FITTINGS MANUFACTURED BY

ISO 9001
BUREAU VERITAS
Certification

BUREAU VERITAS
INDUSTRY & FACILITIES

ACIE
AGENCIA DE CERTIFICACIÓN EN INNOVACIÓN ESPAÑOLA

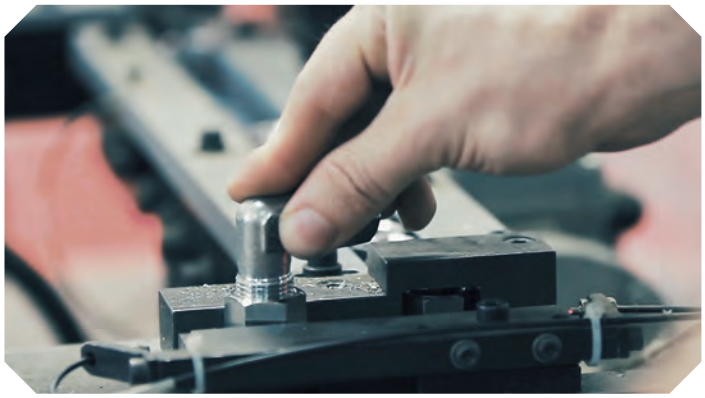

Instrucciones de montaje de racor DIN 2353 sobre el tubo rígido (se recomienda el uso de herramientas de premontaje)

Assembly of the pipe fittings DIN 2353 in the rigid pipe (It is recommended to use pre-assembly tools)
Instructions de montage du raccord DIN 2353 sur le tube rigide (Nous recommandons l'utilisation d'outils)
Assemblaggio del raccordo ad anello DIN 2353 nel tubo rigido (è si consiglia l'uso degli utensili di premontaggio)

Altura mínima (H) recta: 2 veces la longitud de la tuerca.
Minimun Height(H)

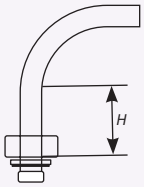

Longitud Mínima L: 2,5-3 veces la longitud de la tuerca
Minimum Lenght (L)

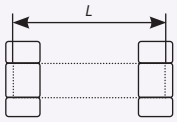

Series Ø ext. tubo	LL				L										S									
	4	5	6	8	6	8	10	12	15	18	22	28	35	42	6	8	10	12	14	16	20	25	30	38
H min.	LL				L										S									
	24	25	25	26	31	31	33	33	36	38	42	42	48	48	35	35	37	37	43	43	50	54	58	65
L min.	LL				L										S									
	30	32	32	33	39	39	42	42	45	48	53	53	60	60	44	44	47	47	54	54	63	68	73	82

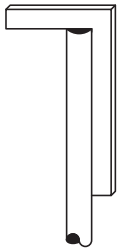

A. Cortar el tubo a escuadra y eliminar rebabas.
Rectangulary saw off the pipe and remove all burrs.
Couper le tube à angle droit et entever les bavures.
Tagliare il tubo ad angolo retto ed eliminare i residui metallici.

B. Lubricar adecuadamente
Lubricate property
Lubrifier convenablement
Lubrificare convenientemente

C. Montaje
Assembly
Montage
Montaggio

D. Apriete
Blocking
Blockage
Bloccaggio

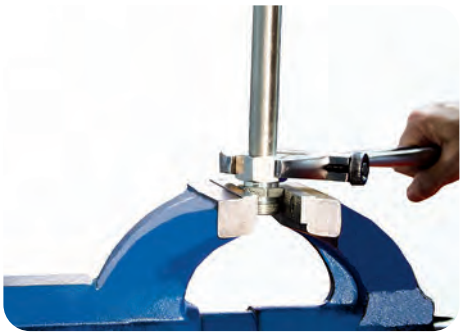

E. Control
Control
Control
Controllo

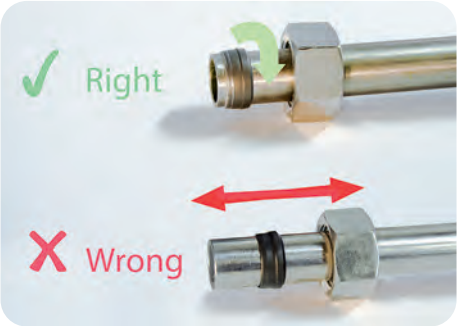

F. Montaje final
Final assembly
Montage final
Montaggio finale

G. Montajes posteriores
Later assemblies
Montages posterieurs
Montaggio successivo

TUBO TRALE® MÉTRICO

TrΔle® metric pipe
Tube rigide TrΔle® métrique
Tubo rigido TrΔle® metrico

Métrico ▪ Metric ▪ Métrique ▪ Metrico | 108

ZTH0

ZTH0...-3

RACORES DIN 2353

DIN 2353 Pipe fittings
Raccords à bague DIN 2353
Raccordi DIN 2353

Tuercas y anillos ▪ Nuts and cutting rings ▪ Écrous et bagues ▪ Dadi e anelli | 109

ZML/ZMS ZACL/ZACS ZVHS ZACJ

Uniones tubo-tubo ▪ Straight couplings ▪ Raccords union double ▪ Raccordi intermedi | 112

ZDL/ZDS ZEL/ZES ZDL/ZDS ZTL/ZTS ZKVL/ZKVS

Uniones rectas tubo-rosca ▪ Straight male stud couplings ▪ Raccords union simple mâle ▪ Raccordi di estremitá diritti | 114

ZAL/ZAS RC ZAL/ZAS BSP WD ZAL/ZAS BSP ZAL/ZAS M WD ZAL/ZAS UNF ZAKL/ZAKS NPT ZAKL/ZAKS BSPT ZAKL/ZAKS METRIC

Codos tubo-rosca ▪ Male stud elbows ▪ Raccords coude mâle gaz ▪ Raccordi di estremitá a 90° | 117

ZCKL/ZCKS BSPT Z WEE ZCKL/ZCKS NPT ZCKL/ZCKS METRIC

TES rosca lateral ▪ Male stud barrel ▪ Raccords Té mâle latéral ▪ Raccordi di estremitá a L | 118

ZLKL/ZLKS BSPT ZLKL/ZLKS METRIC

TES rosca central ▪ Male stud branch ▪ Raccords Té mâle central ▪ Raccordi di estremitá a T | 119

ZFKL/ZFKS BSPT ZFKL/ZFKS METRIC ZFKL/ZFKS NPT

Uniones Métricas ▪ Metric unions ▪ Raccords union Métrique ▪ Raccordi Metrici | 120

ZKORL TLM ZKORS TLM

Reducciones roscadas ▪ Reductions ▪ Raccords de réduction ▪ Raccordi di riduzione filettati | 121

ZRI-R WD

Racores regulables ▪ Adjustable stud couplings ▪ Raccords régulables ▪ Raccordi orientabili | 122

ZEEL/ZEES CTA ZEEL/ZEES TLM ZTEL/ZTES TLM ZLEL/ZLES TLM

RACORES DIN 2353

DIN 2353 Pipe fittings
Raccords à bague DIN 2353
Raccordi DIN 2353

Tubo roscado (hembra giratoria) ▪ Adjustable straight stud ▪ Raccords tube fileté ▪ Raccordi di estremitá per combinazioni | 123

ZATL/ZATS

ZRAL/ZRAS BSP TLM WD

ZRAL/ZRAS NPT TLM

ZRAL/ZRAS METRIC TLM WD

Soldables ▪ Welding fittings ▪ Raccords à souder ▪ Raccordi a saldare | 124

ZASL/ZASS

ZESVL/ZESVS

ZORIL/ZORIS

Pasatabiques ▪ Bulkhead ▪ Raccords passe cloison ▪ Raccordi passaparete | 125

ZSVL/ZSVS

ZUSVL/ZUSVS

KZTPM

Racor recto hembra ▪ Straight female coupling ▪ Raccords droits femelle ▪ Raccordi diritti con estremitá femmina | 126

ZGAIL/ZGAIS BSP

ZMAVL/ZMAVS

ZGAIL/ZGAIS METRIC

ZAM

Orientables ▪ Banjos ▪ Raccords orientables ▪ Raccordi orientabili ad occhio | 127

ZWSVL/ZWSVS BSP

ZWSVL/ZWSVS METRIC

Tapones ▪ Plugs ▪ Raccords bouchon métrique ▪ Tappi | 128

ZBUTZEN L/S

ZSTOPFEN BSP

ZSTOPFEN METRIC

Juntas ▪ O-rings & captive seals ▪ Joints ▪ Guarnizioni | 128

JVT

JVBSP/JVM

Accesorios para montaje ▪ Accessories for the assembly ▪ Accessoires pour le montage ▪ Accessori per assemblaggio | 129

ZVOMO

Grasa

Válvulas antirretorno ▪ Valves ▪ Valves clapet antiretour ▪ Valvole di ritegno | 130

ZRHVL/ZRHVS

ZRHZL/ZRHZS

ZRHDL/ZRHDS

RACORES JIC 37°

Flare fittings JIC 37°
Adapteurs JIC 37°
Raccordi JIC 37°

Tuercas, ferulas y tapones JIC 37° ▪ JIC 37° Nuts, sleeves and plugs ▪ Écrous, ferrules et bouchons JIC 37° ▪ Dadi, bussole e tappi JIC 37° | 131

ZS110 ZS120 ZS121 ZS140 ZS130

Uniones rectas JIC 37° ▪ JIC 37° Straight unions ▪ Union droite JIC 37° ▪ Adattatori diritti JIC 37° | 132

ZS260 ZS260 ZS250 ZS260_OR ZS240 ZS200 ZS380 ZS230 ZS180

ZS210 ZS295 ZS740 ZS291 ZS290 ZS185 JVMET JVUNF ZS730

JVMBSP JTVJIC

Codos 90° JIC 37° ▪ JIC 37° 90° Elbows ▪ Coudes 90° JIC 37° ▪ Adattatori a 90° JIC 37° | 137

ZS500 ZS675 ZS700 ZS500_OR ZS650 ZS570 ZS575 ZS550 ZS595

ZS525

Codos 45 JIC 37° ▪ JIC 37° 45° Elbows ▪ Coudes 45° JIC 37° ▪ Adattatori a 45° JIC 37° | 139

ZS690 ZS775 ZS725

Tes JIC 37° ▪ JIC 37° Tees ▪ Tés JIC 37° ▪ Adattatori a T JIC 37° | 140

ZS505 ZS680 ZS630 ZS505_OR ZS685 ZS625

TUBO TRALE® MÉTRICO

TrΔle® metric pipe
Tube rigide TrΔle® métrique
Tubo rigido TrΔle® metrico

Tubo rígido - 6 mts

Rigid pipe - 6 mts

Tube rigide - 6 mts

Tubo rigido - 6 mts

Ø EXT. Ø OUTER	Ø INT. Ø INNER		Referencia Part n°	€/M
4	2		ZTH0040100	5,06
6	4		ZTH0060100	8,04
6	3	NEW	ZTH0060150	7,97
8	6		ZTH0080100	10,28
8	5	NEW	ZTH0080150	13,42
10	8		ZTH0100100	12,30
10	7		ZTH0100150	18,18
10	6	NEW	ZTH0100200	18,96
12	10		ZTH0120100	13,56
12	9		ZTH0120150	18,60
12	8	NEW	ZTH0120200	27,33
12	7	NEW	ZTH0120250	34,31
14	10		ZTH0140200	27,01
15	12		ZTH0150150	24,61
16	12		ZTH0160200	36,35
16	10	NEW	ZTH0160300	34,18
18	15		ZTH0180150	31,60
18	14		ZTH0180200	40,83
20	14		ZTH0200300	60,82
22	18		ZTH0220200	46,98
25	19		ZTH0250300	77,32
28	24		ZTH0280200	60,26
30	24		ZTH0300300	77,18
35	31		ZTH0350200	75,01
38	30		ZTH0380400	128,01
42	38	NEW	ZTH0420200	76,37
42	36		ZTH0420300	121,92

Tubo rígido - 3 mts

Rigid pipe - 3 mts

Tube rigide - 3 mts

Tubo rigido - 3 mts

Ø EXT. Ø OUTER	Ø INT. Ø INNER		Referencia Part n°	€/M
4	2		ZTH0040100-3	5,32
6	4		ZTH0060100-3	8,45
6	3	NEW	ZTH0060150-3	8,37
8	6		ZTH0080100-3	10,79
8	5	NEW	ZTH0080150-3	14,09
10	8		ZTH0100100-3	12,92
10	7		ZTH0100150-3	19,08
12	10		ZTH0120100-3	14,24
10	6	NEW	ZTH0100200-3	19,91
12	9		ZTH0120150-3	19,53
12	8	NEW	ZTH0120200-3	28,70
12	7	NEW	ZTH0120250-3	36,03
14	10		ZTH0140200-3	28,36
15	12		ZTH0150150-3	25,84
16	12		ZTH0160200-3	38,17
16	10	NEW	ZTH0160300-3	35,89
18	15		ZTH0180150-3	33,18
18	14		ZTH0180200-3	42,87
20	14		ZTH0200300-3	63,86
22	18		ZTH0220200-3	49,33
25	19		ZTH0250300-3	81,18
28	24		ZTH0280200-3	63,27
30	24		ZTH0300300-3	81,04
35	31		ZTH0350200-3	78,76
38	30		ZTH0380400-3	134,41
42	38	NEW	ZTH0420200-3	80,19
42	36		ZTH0420300-3	128,02

TUBO SCHEDULE **PIPE**

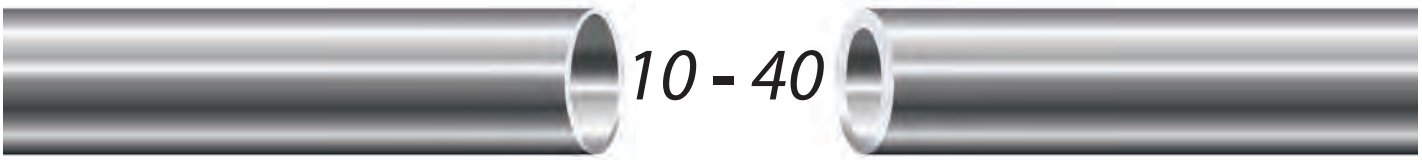

PÁGINA | PAGE
149

Consulta en nuestra ficha técnica datos | Check our technical sheet for data

RACORES DIN 2353

DIN 2353 Pipe fittings
Raccords à bague DIN 2353
Raccordi DIN 2353

Tuercas Métricas DIN 3870

Nuts DIN 3870

Écrou DIN 3870

Dado DIN 3870

TUBO PIPE	SERIE SERIES	ROSCA THREAD	Referencia Part n°	€
4	LL	M8X1	**Z MLL 4**	**3,40**
6	LL	M10X1	**Z MLL 6**	**3,12**
8	LL	M12X1	**Z MLL 8**	**3,64**
6	L	M12X1.5	**Z ML 6**	**2,13**
8	L	M14X1.5	**Z ML 8**	**2,64**
10	L	M16X1.5	**Z ML 10**	**3,04**
12	L	M18X1.5	**Z ML 12**	**3,65**
15	L	M22X1.5	**Z ML 15**	**5,28**
18	L	M26X1.5	**Z ML 18**	**8,21**
22	L	M30X2	**Z ML 22**	**10,66**
28	L	M36X2	**Z ML 28**	**21,93**
35	L	M45X2	**Z ML 35**	**36,67**
42	L	M52X2	**Z ML 42**	**45,78**
6	S	M14X1.5	**Z MS 6**	**2,87**
8	S	M16X1.5	**Z MS 8**	**3,23**
10	S	M18X1.5	**Z MS 10**	**4,05**
12	S	M20X1.5	**Z MS 12**	**4,49**
14	S	M22X1.5	**Z MS 14**	**7,31**
16	S	M24X1.5	**Z MS 16**	**8,12**
20	S	M30X2	**Z MS 20**	**12,38**
25	S	M36X2	**Z MS 25**	**29,22**
30	S	M42X2	**Z MS 30**	**37,58**
38	S	M52X2	**Z MS 38**	**57,15**

Anillos de corte DIN 3861

Cutting rings DIN 3861

Bague DIN 3861

Anello DIN 3861

TUBO PIPE	SERIE SERIES	Referencia Part n°	€
4	LL	**Z ACLL 4**	**2,04**
6	LL	**Z ACLL 6**	**2,24**
8	LL	**Z ACLL 8**	**2,32**
6	L/S	**Z ACL 6**	**2,05**
8	L/S	**Z ACL 8**	**2,11**
10	L/S	**Z ACL 10**	**2,70**
12	L/S	**Z ACL 12**	**2,81**
15	L	**Z ACL 15**	**3,09**
18	L	**Z ACL 18**	**3,37**
22	L	**Z ACL 22**	**4,50**
28	L	**Z ACL 28**	**6,75**
35	L	**Z ACL 35**	**10,32**
42	L	**Z ACL 42**	**12,05**
14	S	**Z ACS 14**	**3,53**
16	S	**Z ACS 16**	**3,83**
20	S	**Z ACS 20**	**4,50**
25	S	**Z ACS 25**	**6,75**
30	S	**Z ACS 30**	**10,12**
38	S	**Z ACS 38**	**10,89**

Anillos de refuerzo

Reinforced ring

Bague de renforcement

Anello di rinforzo

TUBO PIPE	Referencia Part n°	€
4	**Z VHS 4**	*
5	**Z VHS 5**	*
6	**Z VHS 6**	*
7	**Z VHS 7**	*
8	**Z VHS 8**	*
9	**Z VHS 9**	*
10	**Z VHS 10**	*
11	**Z VHS 11**	*
12	**Z VHS 12**	*
13	**Z VHS 13**	*
14	**Z VHS 14**	*
15	**Z VHS 15**	*
16	**Z VHS 16**	*
17	**Z VHS 17**	*
18	**Z VHS 18**	*
19	**Z VHS 19**	*
20	**Z VHS 20**	*
22	**Z VHS 22**	*
24	**Z VHS 24**	*
25	**Z VHS 25**	*
31	**Z VHS 31**	*
33	**Z VHS 33**	*
38	**Z VHS 38**	*

***Consultar** / On request**/ Sur demande** / Su richiesta

RACORES DIN 2353

DIN 2353 Pipe fittings
Raccords à bague DIN 2353
Raccordi DIN 2353

Anillos de corte con junta

Cutting ring with joint

Bague avec joint

Anello da taglio con guarnizione

TUBO PIPE	SERIE SERIES	Referencia Part n°	€
6	L	**Z ACJL 6**	**5,04**
8	L	**Z ACJL 8**	**5,16**
10	L	**Z ACJL 10**	**5,81**
12	L	**Z ACJL 12**	**4,94**
15	L	**Z ACJL 15**	**8,23**
18	L	**Z ACJL 18**	**10,29**
22	L	**Z ACJL 22**	**11,76**
28	L	**Z ACJL 28**	**16,85**
35	L	**Z ACJL 35**	**24,95**
42	L	**Z ACJL 42**	**31,20**
6	S	**Z ACJS 6**	**5,15**
8	S	**Z ACJS 8**	**5,19**
10	S	**Z ACJS 10**	**5,85**
12	S	**Z ACJS 12**	**6,65**
14	S	**Z ACJS 14**	**8,10**
16	S	**Z ACJS 16**	**9,33**
20	S	**Z ACJS 20**	**12,32**
25	S	**Z ACJS 25**	**16,55**
30	S	**Z ACJS 30**	**21,70**
38	S	**Z ACJS 38**	**31,31**

- Asegura una completa estanqueidad con el anillo de corte con junta
- *Ensure the right tightening with our cutting ring with joint*

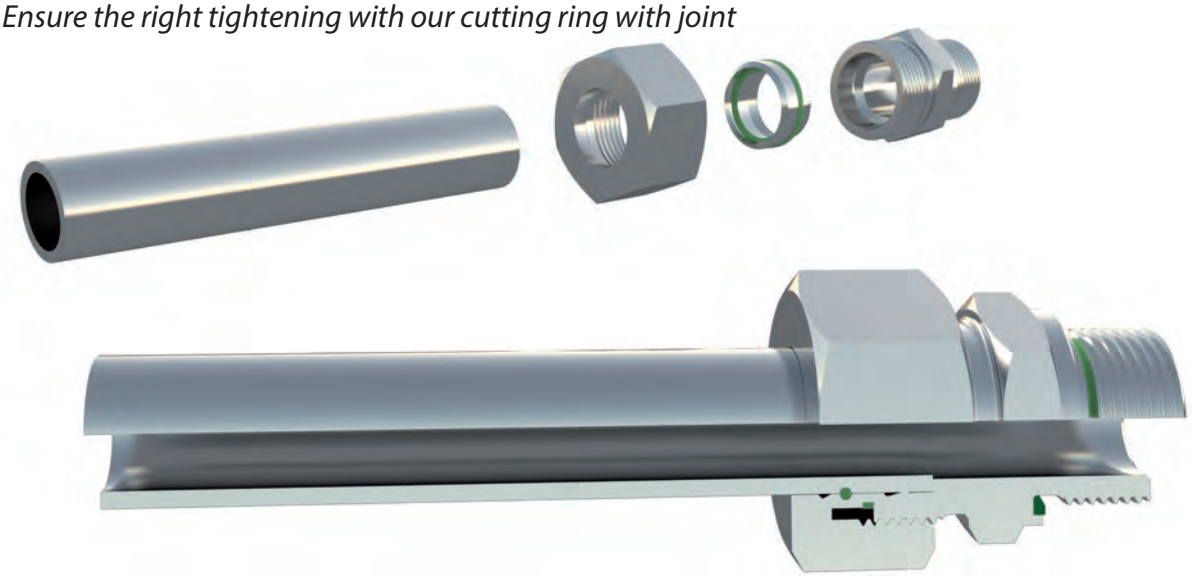

Consulta en nuestra ficha técnica datos | Check our technical sheet for data

Ø FUGAS EN EQUIPAMIENTOS SOMETIDOS A ALTAS VIBRACIONES

ACUZ

Ø LEAKS IN EQUIPMENT SUBJECTED TO HIGH VIBRATIONS

USOS MÁS EXIGENTES · HIGH DEMANDING APPLICATIONS

BAJO CONSULTA
ON REQUEST

NEW

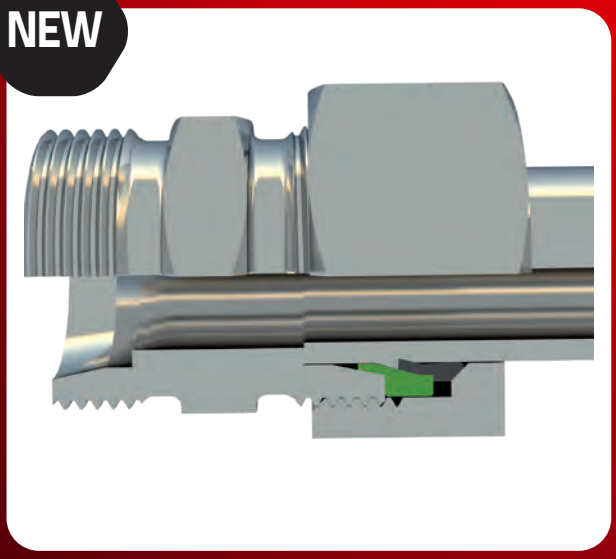

- ***Hasta una presión nominal (PN) de 800 bar***
- ***Reducción de los pares de apriete en hasta 25%***
- ***Un montaje aún más sencillo***
- ***Sencillo manejo mediante tuerca funcional***

- Pressure rating up to 800 bar (PN)
- Reduction of tightening torques up to 25%
- Easier assembly
- Simple handling through functional nut

RACORES DIN 2353

DIN 2353 Pipe fittings
Raccords à bague DIN 2353
Raccordi DIN 2353

Racor unión recta tubo - tubo

Straight coupling

Raccord union double

Raccordo intermedio diritto

TUBO PIPE	SERIE SERIES	Referencia Part n°	€	Referencia STA Part N° STA	€
4	LL	Z DLL 4	26,35	---	*
6	LL	Z DLL 6	23,09	---	*
8	LL	Z DLL 8	22,29	---	*
6	L	Z DL 6	15,61	Z STA DL 6	7,02
8	L	Z DL 8	15,32	Z STA DL 8	8,78
10	L	Z DL 10	16,95	Z STA DL 10	10,13
12	L	Z DL 12	20,88	Z STA DL 12	10,46
15	L	Z DL 15	27,82	Z STA DL 15	13,84
18	L	Z DL 18	35,86	Z STA DL 18	16,47
22	L	Z DL 22	43,98	Z STA DL 22	25,00
28	L	Z DL 28	76,33	Z STA DL 28	40,54
35	L	Z DL 35	114,55	Z STA DL 35	55,40
42	L	Z DL 42	168,30	Z STA DL 42	86,46
6	S	Z DS 6	18,91	Z STA DS 6	10,81
8	S	Z DS 8	20,53	Z STA DS 8	9,61
10	S	Z DS 10	24,71	Z STA DS 10	13,46
12	S	Z DS 12	27,84	Z STA DS 12	17,48
14	S	Z DS 14	34,50	Z STA DS 14	21,61
16	S	Z DS 16	34,38	Z STA DS 16	17,73
20	S	Z DS 20	55,39	Z STA DS 20	29,05
25	S	Z DS 25	95,21	Z STA DS 25	47,28
30	S	Z DS 30	127,90	Z STA DS 30	60,79
38	S	Z DS 38	193,24	Z STA DS 38	79,69

Racor unión en codo tubo - tubo

Equal elbow coupling

Raccord coude égal

Raccordo intermedio a 90°

TUBO PIPE	SERIE SERIES	Referencia Part n°	€	Referencia STA Part N° STA	€
4	LL	Z ELL 4	39,27	---	*
6	LL	Z ELL 6	34,86	---	*
8	LL	Z ELL 8	37,82	---	*
6	L	Z EL 6	24,22	Z STA EL 6	17,32
8	L	Z EL 8	22,36	Z STA EL 8	21,11
10	L	Z EL 10	25,46	Z STA EL 10	24,32
12	L	Z EL 12	31,02	Z STA EL 12	25,67
15	L	Z EL 15	43,12	Z STA EL 15	33,78
18	L	Z EL 18	60,81	Z STA EL 18	45,93
22	L	Z EL 22	86,46	Z STA EL 22	65,27
28	L	Z EL 28	130,80	Z STA EL 28	99,71
35	L	Z EL 35	202,37	Z STA EL 35	157,89
42	L	Z EL 42	290,22	Z STA EL 42	244,50
6	S	Z ES 6	26,45	Z STA ES 6	23,38
8	S	Z ES 8	28,80	Z STA ES 8	26,00
10	S	Z ES 10	32,96	Z STA ES 10	27,01
12	S	Z ES 12	41,41	Z STA ES 12	30,49
14	S	Z ES 14	51,30	Z STA ES 14	37,82
16	S	Z ES 16	63,14	Z STA ES 16	43,23
20	S	Z ES 20	87,73	Z STA ES 20	66,77
25	S	Z ES 25	147,30	Z STA ES 25	99,05
30	S	Z ES 30	205,46	Z STA ES 30	152,81
38	S	Z ES 38	312,62	Z STA ES 38	220,18

Racor unión recta en reducción tubo - tubo

Straight reducing coupling

Raccord union double en réduction

Raccordo di riduzione

TUBO PIPE	TUBO PIPE	SERIE SERIES	Referencia Part n°	€	Referencia STA Part N° STA	€
8	6	L	Z DL 8-6	20,08	Z STA DL 8-6	10,83
10	6	L	Z DL 10-6	21,18	Z STA DL 10-6	10,94
10	8	L	Z DL 10-8	20,25	Z STA DL 10-8	9,44
12	6	L	Z DL 12-6	23,85	Z STA DL 12-6	12,89
12	8	L	Z DL 12-8	24,61	Z STA DL 12-8	12,85
12	10	L	Z DL 12-10	22,95	Z STA DL 12-10	10,43
15	6	L	Z DL 15-6	36,75	Z STA DL 15-6	23,88
15	8	L	Z DL 15-8	40,54	Z STA DL 15-8	25,00
15	10	L	Z DL 15-10	30,06	Z STA DL 15-10	15,63
15	12	L	Z DL 15-12	28,80	Z STA DL 15-12	14,27
18	8	L	Z DL 18-8	45,11	Z STA DL 18-8	28,47
18	10	L	Z DL 18-10	38,48	Z STA DL 18-10	20,86
18	12	L	Z DL 18-12	39,07	Z STA DL 18-12	20,72
18	15	L	Z DL 18-15	40,84	Z STA DL 18-15	23,46
22	12	L	Z DL 22-12	51,94	Z STA DL 22-12	30,00
22	15	L	Z DL 22-15	50,37	Z STA DL 22-15	26,52
22	18	L	Z DL 22-18	54,39	Z STA DL 22-18	27,34
28	22	L	Z DL 28-22	93,02	Z STA DL 28-22	48,86
35	22	L	Z DL 35-22 *	97,17	Z STA DL 35-22 *	40,59
35	28	L	Z DL 35-28	129,45	Z STA DL 35-28	84,44
42	28	L	Z DL 42-28	172,90	Z STA DL 42-28	86,07
42	35	L	Z DL 42-35	161,34	Z STA DL 42-35	102,93
8	6	S	Z DS 8-6	28,33	Z STA DS 8-6	18,09
10	6	S	Z DS 10-6	27,84	Z STA DS 10-6	17,52
10	8	S	Z DS 10-8	30,82	Z STA DS 10-8	20,01
12	6	S	Z DS 12-6	36,35	Z STA DS 12-6	23,82
12	8	S	Z DS 12-8	30,85	Z STA DS 12-8	17,89
12	10	S	Z DS 12-10	33,29	Z STA DS 12-10	18,93
14	10	S	Z DS 14-10	39,37	Z STA DS 14-10	21,47
16	10	S	Z DS 16-10	46,33	Z STA DS 16-10	28,23
16	12	S	Z DS 16-12	41,60	Z STA DS 16-12	22,03
16	14	S	Z DS 16-14	48,43	Z STA DS 16-14	25,34
20	12	S	Z DS 20-12	63,36	Z STA DS 20-12	41,13
20	14	S	Z DS 20-14	73,36	Z STA DS 20-14	45,78
20	16	S	Z DS 20-16	65,48	Z STA DS 20-16	36,34
25	16	S	Z DS 25-16	100,88	Z STA DS 25-16	52,65
25	20	S	Z DS 25-20	107,07	Z STA DS 25-20	53,90
30	20	S	Z DS 30-20	142,36	Z STA DS 30-20	77,47
30	25	S	Z DS 30-25	153,38	Z STA DS 30-25	99,15
38	25	S	Z DS 38-25	191,47	Z STA DS 38-25	91,32
38	30	S	Z DS 38-30	232,03	Z STA DS 38-30	115,98

*Hasta fin de existencias / *Until end of stock* / Jusqu´à la fin du stock / *Fino ad esaurimento*

RACORES DIN 2353

DIN 2353 Pipe fittings
Raccords à bague DIN 2353
Raccordi DIN 2353

Racor unión en T tubo - tubo

Equal Tee

Raccord Té égal

Raccordo intermedio a T

TUBO PIPE	SERIE SERIES	Referencia Part n°	€	Referencia STA Part N° STA	€
4	LL	Z TLL 4	50,75	---	*
6	LL	Z TLL 6	51,32	---	*
8	LL	Z TLL 8	56,06	---	*
6	L	Z TL 6	31,04	Z STA TL 6	22,83
8	L	Z TL 8	32,55	Z STA TL 8	26,35
10	L	Z TL 10	36,83	Z STA TL 10	28,23
12	L	Z TL 12	41,64	Z STA TL 12	30,39
15	L	Z TL 15	56,43	Z STA TL 15	43,09
18	L	Z TL 18	81,32	Z STA TL 18	56,75
22	L	Z TL 22	116,85	Z STA TL 22	80,93
28	L	Z TL 28	168,33	Z STA TL 28	127,31
35	L	Z TL 35	298,03	Z STA TL 35	229,64
42	L	Z TL 42	405,32	Z STA TL 42	303,94
6	S	Z TS 6	35,02	Z STA TS 6	31,58
8	S	Z TS 8	37,91	Z STA TS 8	32,60
10	S	Z TS 10	44,43	Z STA TS 10	32,42
12	S	Z TS 12	54,95	Z STA TS 12	43,23
14	S	Z TS 14	84,04	Z STA TS 14	54,13
16	S	Z TS 16	82,04	Z STA TS 16	56,75
20	S	Z TS 20	114,98	Z STA TS 20	84,09
25	S	Z TS 25	197,25	Z STA TS 25	134,67
30	S	Z TS 30	303,18	Z STA TS 30	205,08
38	S	Z TS 38	417,67	Z STA TS 38	243,27

Racor unión en cruz tubo - tubo

Equal cross

Raccord croix égale

Raccordo intermedio a croce

TUBO PIPE	SERIE SERIES	Referencia Part n°	€	Referencia STA Part N° STA	€
6	L	Z KVL 6	67,78	Z STA KVL 6	59,26
8	L	Z KVL 8	70,36	Z STA KVL 8	60,47
10	L	Z KVL 10	97,99	Z STA KVL 10	85,14
12	L	Z KVL 12	85,11	Z STA KVL 12	68,42
15	L	Z KVL 15	137,04	Z STA KVL 15	121,59
18	L	Z KVL 18	146,55	Z STA KVL 18	132,57
22	L	Z KVL 22	193,53	Z STA KVL 22	159,86
28	L	Z KVL 28	238,00	Z STA KVL 28	175,19
35	L	Z KVL 35	682,58	Z STA KVL 35	494,23
42	L	Z KVL 42	664,00	Z STA KVL 42	494,95
6	S	Z KVS 6	79,69	Z STA KVS 6	59,64
8	S	Z KVS 8	80,58	Z STA KVS 8	70,27
10	S	Z KVS 10	91,39	Z STA KVS 10	74,47
12	S	Z KVS 12	113,82	Z STA KVS 12	94,46
14	S	Z KVS 14	189,37	Z STA KVS 14	145,65
16	S	Z KVS 16	154,13	Z STA KVS 16	120,76
20	S	Z KVS 20	194,36	Z STA KVS 20	155,27
25	S	Z KVS 25	284,05	Z STA KVS 25	161,44
30	S	Z KVS 30	448,90	Z STA KVS 30	257,73
38	S	Z KVS 38	670,43	Z STA KVS 38	447,32

*Consultar / On request/ Sur demande / Su richiesta

RACORES DIN 2353

DIN 2353 Pipe fittings
Raccords à bague DIN 2353
Raccordi DIN 2353

Racor recto rosca cilíndrica BSP cono 60°

Straight male stud coupling BSP cyl. 60°

Raccord Union simple mâle gaz cylindrique 60°

Raccordo di estremitá diritto BSP 60°

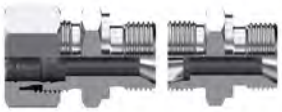

TUBO PIPE	ROSCA THREAD	SERIE SERIES	Referencia Part n°	€	Referencia STA Part N° STA	€
6	1/8" BSP	L	Z AL 6 RC 1/8	9,27	Z STA AL 6 RC 1/8	6,24
6	1/4" BSP	L	Z AL 6 RC 1/4	14,05	Z STA AL 6 RC 1/4	11,60
6	3/8" BSP	L	Z AL 6 RC 3/8	27,14	Z STA AL 6 RC 3/8	22,80
6	1/2" BSP	L	Z AL 6 RC 1/2	38,42	Z STA AL 6 RC 1/2	34,08
8	1/8" BSP	L	Z AL 8 RC 1/8	17,60	Z STA AL 8 RC 1/8	12,69
8	1/4" BSP	L	Z AL 8 RC 1/4	15,78	Z STA AL 8 RC 1/4	10,87
8	3/8" BSP	L	Z AL 8 RC 3/8	19,21	Z STA AL 8 RC 3/8	14,30
8	1/2" BSP	L	Z AL 8 RC 1/2	32,07	Z STA AL 8 RC 1/2	27,16
10	1/8" BSP	L	Z AL 10 RC 1/8	14,80	Z STA AL 10 RC 1/8	9,16
10	1/4" BSP	L	Z AL 10 RC 1/4	13,54	Z STA AL 10 RC 1/4	7,86
10	3/8" BSP	L	Z AL 10 RC 3/8	17,18	Z STA AL 10 RC 3/8	13,43
10	1/2" BSP	L	Z AL 10 RC 1/2	23,10	Z STA AL 10 RC 1/2	17,20
12	1/4" BSP	L	Z AL 12 RC 1/4	15,70	Z STA AL 12 RC 1/4	10,97
12	3/8" BSP	L	Z AL 12 RC 3/8	15,07	Z STA AL 12 RC 3/8	11,44
12	1/2" BSP	L	Z AL 12 RC 1/2	20,92	Z STA AL 12 RC 1/2	14,63
15	3/8" BSP	L	Z AL 15 RC 3/8	21,30	Z STA AL 15 RC 3/8	14,82
15	1/2" BSP	L	Z AL 15 RC 1/2	22,12	Z STA AL 15 RC 1/2	14,62
15	3/4" BSP	L	Z AL 15 RC 3/4	35,38	Z STA AL 15 RC 3/4	26,85
18	1/2" BSP	L	Z AL 18 RC 1/2	34,15	Z STA AL 18 RC 1/2	22,66
18	3/4" BSP	L	Z AL 18 RC 3/4	34,48	Z STA AL 18 RC 3/4	25,05
22	3/8"BSP	L	Z AL 22 RC 3/8	44,46	Z STA AL 22 RC 3/8	29,14
22	1/2" BSP	L	Z AL 22 RC 1/2	46,82	Z STA AL 22 RC 1/2	31,50
22	3/4" BSP	L	Z AL 22 RC 3/4	37,48	Z STA AL 22 RC 3/4	22,65
22	1" BSP	L	Z AL 22 RC 1	53,59	Z STA AL 22 RC 1	38,27
28	3/4" BSP	L	Z AL 28 RC 3/4	59,54	Z STA AL 28 RC 3/4	31,43
28	1" BSP	L	Z AL 28 RC 1	63,06	Z STA AL 28 RC 1	34,22
35	1"1/4 BSP	L	Z AL 35 RC 1 1/4	123,56	Z STA AL 35 RC 1 1/4	76,41
35	1"1/2 BSP	L	Z AL 35 RC 1 1/2	114,20	Z STA AL 35 RC 1 1/2	68,00
42	1" 1/4 BSP	L	Z AL 42 RC 1 1/4	151,46	Z STA AL 42 RC 1 1/4	93,47
42	1"1/2 BSP	L	Z AL 42 RC 1 1/2	137,73	Z STA AL 42 RC 1 1/2	79,74
6	1/4" BSP	S	Z AS 6 RC 1/4	24,30	Z STA AS 6 RC 1/4	19,23
6	3/8" BSP	S	Z AS 6 RC 3/8	20,07	Z STA AS 6 RC 3/8	15,00
8	1/4" BSP	S	Z AS 8 RC 1/4	15,70	Z STA AS 8 RC 1/4	10,81
8	3/8" BSP	S	Z AS 8 RC 3/8	19,15	Z STA AS 8 RC 3/8	13,64
8	1/2" BSP	S	Z AS 8 RC 1/2	34,51	Z STA AS 8 RC 1/2	29,01
10	1/4" BSP	S	Z AS 10 RC 1/4	17,67	Z STA AS 10 RC 1/4	11,30
10	3/8" BSP	S	Z AS 10 RC 3/8	27,74	Z STA AS 10 RC 3/8	20,83
10	1/2" BSP	S	Z AS 10 RC 1/2	34,53	Z STA AS 10 RC 1/2	27,62
12	1/4" BSP	S	Z AS 12 RC 1/4	24,02	Z STA AS 12 RC 1/4	16,70
12	3/8" BSP	S	Z AS 12 RC 3/8	22,31	Z STA AS 12 RC 3/8	14,86
12	1/2" BSP	S	Z AS 12 RC 1/2	27,69	Z STA AS 12 RC 1/2	20,23
14	3/8" BSP	S	Z AS 14 RC 3/8	39,45	Z STA AS 14 RC 3/8	28,46
14	1/2" BSP	S	Z AS 14 RC 1/2	37,81	Z STA AS 14 RC 1/2	26,82
16	3/8" BSP	S	Z AS 16 RC 3/8	30,16	Z STA AS 16 RC 3/8	23,93
16	1/2" BSP	S	Z AS 16 RC 1/2	27,16	Z STA AS 16 RC 1/2	17,38
16	3/4" BSP	S	Z AS 16 RC 3/4	42,88	Z STA AS 16 RC 3/4	30,78
20	3/8" BSP	S	Z AS 20 RC 3/8	48,44	Z STA AS 20 RC 3/8	31,56
20	1/2" BSP	S	Z AS 20 RC 1/2	40,60	Z STA AS 20 RC 1/2	25,80
20	3/4" BSP	S	Z AS 20 RC 3/4	48,39	Z STA AS 20 RC 3/4	31,36
20	1" BSP	S	Z AS 20 RC 1	67,62	Z STA AS 20 RC 1	50,59
25	3/4" BSP	S	Z AS 25 RC 3/4	78,11	Z STA AS 25 RC 3/4	41,98
25	1" BSP	S	Z AS 25 RC 1	79,92	Z STA AS 25 RC 1	43,79
25	1" 1/4 BSP	S	Z AS 25 RC 1 1/4	114,80	Z STA AS 25 RC 1 1/4	78,67
30	1" BSP	S	Z AS 30 RC 1	114,12	Z STA AS 30 RC 1	66,26
30	1"1/4 BSP	S	Z AS 30 RC 1 1/4	131,76	Z STA AS 30 RC 1 1/4	83,91
30	1"1/2 BSP	S	Z AS 30 RC 1 1/2	112,59	Z STA AS 30 RC 1 1/2	73,20
38	1"1/4 BSP	S	Z AS 38 RC 1 1/4	155,19	Z STA AS 38 RC 1 1/4	86,99
38	1"1/2 BSP	S	Z AS 38 RC 1 1/2	167,19	Z STA AS 38 RC 1 1/2	99,00

Racor recto rosca cilíndrica BSP con junta

Straight male stud coupling BSP cylindrical with captive seal

Raccord union simple mâle gaz cylindrique avec joint plat

Raccordo di estremitá diritto BSP con guarnizione

TUBO PIPE	SERIE SERIES	ROSCA THREAD	Referencia Part n°	€	Referencia STA Part N° STA	€
6	L	1/8"BSP	Z AL 6 R 1/8WD	12,16	Z STA AL 6 R 1/8WD	10,59
6	L	1/4"BSP	Z AL 6 R 1/4WD	15,26	Z STA AL 6 R 1/4WD	12,72
6	L	3/8"BSP	Z AL 6 R 3/8WD	18,13	Z STA AL 6 R 3/8WD	13,79
8	L	1/8"BSP	Z AL 8 R 1/8WD	14,63	Z STA AL 8 R 1/8WD	11,32
8	L	1/4"BSP	Z AL 8 R 1/4WD	14,69	Z STA AL 8 R 1/4WD	10,60
8	L	3/8"BSP	Z AL 8 R 3/8WD	17,20	Z STA AL 8 R 3/8WD	14,37
8	L	1/2"BSP	Z AL 8 R 1/2WD	22,89	Z STA AL 8 R 1/2WD	17,98
10	L	1/8"BSP	Z AL 10 R 1/8WD	16,70	Z STA AL 10 R 1/8WD	15,16
10	L	1/4"BSP	Z AL 10 R 1/4WD	15,83	Z STA AL 10 R 1/4WD	11,63
10	L	3/8"BSP	Z AL 10 R 3/8WD	17,41	Z STA AL 10 R 3/8WD	15,29
10	L	1/2"BSP	Z AL 10 R 1/2WD	22,71	Z STA AL 10 R 1/2WD	20,35
12	L	1/4"BSP	Z AL 12 R 1/4WD	17,61	Z STA AL 12 R 1/4WD	13,89
12	L	3/8"BSP	Z AL 12 R 3/8WD	17,77	Z STA AL 12 R 3/8WD	13,70
12	L	1/2"BSP	Z AL 12 R 1/2WD	21,80	Z STA AL 12 R 1/2WD	18,29
15	L	3/8"BSP	Z AL 15 R 3/8WD	24,62	Z STA AL 15 R 3/8WD	17,88
15	L	1/2"BSP	Z AL 15 R 1/2WD	25,22	Z STA AL 15 R 1/2WD	16,70
15	L	3/4"BSP	Z AL 15 R 3/4WD	33,04	Z STA AL 15 R 3/4WD	24,95
18	L	3/8"BSP	Z AL 18 R 3/8WD	39,18	Z STA AL 18 R 3/8WD	27,45
18	L	1/2"BSP	Z AL 18 R 1/2WD	27,15	Z STA AL 18 R 1/2WD	16,55
18	L	3/4"BSP	Z AL 18 R 3/4WD	35,77	Z STA AL 18 R 3/4WD	27,51
22	L	1/2"BSP	Z AL 22 R 1/2WD	44,79	Z STA AL 22 R 1/2WD	29,47
22	L	3/4"BSP	Z AL 22 R 3/4WD	34,60	Z STA AL 22 R 3/4WD	22,09
22	L	1"BSP	Z AL 22 R 1WD	53,29	Z STA AL 22 R 1WD	40,42
28	L	3/4"BSP	Z AL 28 R 3/4WD	63,92	Z STA AL 28 R 3/4WD	38,61
28	L	1"BSP	Z AL 28 R 1WD	57,41	Z STA AL 28 R 1WD	34,17
35	L	1"BSP	Z AL 35 R 1WD	103,70	Z STA AL 35 R 1WD	56,55
35	L	1"1/4BSP	Z AL 35 R 1 1/4WD	94,59	Z STA AL 35 R 1 1/4WD	67,69
42	L	1"1/2BSP	Z AL 42 R 1 1/2WD	126,58	Z STA AL 42 R 1 1/2WD	73,58
6	S	1/4"BSP	Z AS 6 R 1/4WD	21,49	Z STA AS 6 R 1/4WD	16,57
8	S	1/4"BSP	Z AS 8 R 1/4WD	18,26	Z STA AS 8 R 1/4WD	14,52
8	S	3/8"BSP	Z AS 8 R 3/8WD	22,93	Z STA AS 8 R 3/8WD	18,10
8	S	1/2"BSP	Z AS 8 R 1/2WD	29,05	Z STA AS 8 R 1/2WD	23,55
10	S	1/4"BSP	Z AS 10 R 1/4WD	19,53	Z STA AS 10 R 1/4WD	15,68
10	S	3/8"BSP	Z AS 10 R 3/8WD	24,25	Z STA AS 10 R 3/8WD	19,32
10	S	1/2"BSP	Z AS 10 R 1/2WD	32,80	Z STA AS 10 R 1/2WD	25,90
12	S	1/4"BSP	Z AS 12 R 1/4WD	26,38	Z STA AS 12 R 1/4WD	19,82
12	S	3/8"BSP	Z AS 12 R 3/8WD	21,13	Z STA AS 12 R 3/8WD	13,67
12	S	1/2"BSP	Z AS 12 R 1/2WD	27,98	Z STA AS 12 R 1/2WD	23,60
14	S	3/8"BSP	Z AS 14 R 3/8WD	34,74	Z STA AS 14 R 3/8WD	27,68
14	S	1/2"BSP	Z AS 14 R 1/2WD	30,23	Z STA AS 14 R 1/2WD	23,04
16	S	3/8"BSP	Z AS 16 R 3/8WD	30,84	Z STA AS 16 R 3/8WD	20,80
16	S	1/2"BSP	Z AS 16 R 1/2WD	29,81	Z STA AS 16 R 1/2WD	19,10
16	S	3/4"BSP	Z AS 16 R 3/4WD	37,44	Z STA AS 16 R 3/4WD	27,62
20	S	1/2"BSP	Z AS 20 R 1/2WD	39,46	Z STA AS 20 R 1/2WD	26,96
20	S	3/4"BSP	Z AS 20 R 3/4WD	39,55	Z STA AS 20 R 3/4WD	26,61
25	S	3/4" BSP	Z AS 25 R 3/4WD	66,98	Z STA AS 25 R 3/4WD	47,42
25	S	1"BSP	Z AS 25 R 1WD	68,65	Z STA AS 25 R 1WD	53,47
25	S	1"1/4BSP	Z AS 25 R 1 1/4WD	114,91	Z STA AS 25 R 1 1/4WD	78,78
30	S	1"BSP	Z AS 30 R 1WD	98,28	Z STA AS 30 R 1WD	50,43
30	S	1"1/4 BSP	Z AS 30 R 1 1/4WD	109,18	Z STA AS 30 R 1 1/4WD	67,00
30	S	1"1/2BSP	Z AS 30 R 1 1/2WD	168,86	Z STA AS 30 R 1 1/2WD	121,01
38	S	1"1/4BSP	Z AS 38 R 1 1/4WD	151,29	Z STA AS 38 R 1 1/4WD	94,25
38	S	1"1/2BSP	Z AS 38 R 1 1/2WD	147,76	Z STA AS 38 R 1 1/2WD	84,84

RACORES DIN 2353

DIN 2353 Pipe fittings
Raccords à bague DIN 2353
Raccordi DIN 2353

Racor recto rosca cilíndrica BSP

Straight male stud coupling BSP cylindrical

Raccord union simple gaz cylindrique mâle

Raccordo di estremitá diritto BSP

TUBO PIPE	SERIE SERIES	ROSCA THREAD	Referencia Part n°	€	Referencia STA Part N° STA	€
10	L	1/8" BSP	**Z AL 10 R 1/8**	**14,80**	---	*
15	L	3/4" BSP	**Z AL 15 R 3/4**	**29,11**	---	*
18	L	1/2" BSP	**Z AL 18 R 1/2**	**25,25**	**Z STA AL 18 R 1/2**	**20,26**
6	S	1/4" BSP	**Z AS 6 R 1/4**	**18,51**	**Z STA AS 6 R 1/4**	**13,43**
6	S	3/8" BSP	**Z AS 6 R 3/8**	**20,07**	---	*
8	S	1/4" BSP	**Z AS 8 R 1/4**	**15,10**	**Z STA AS 8 R 1/4**	**11,01**
8	S	1/2" BSP	**Z AS 8 R 1/2**	**27,25**	---	*
10	S	1/4" BSP	**Z AS 10 R 1/4**	**16,99**	**Z STA AS 10 R 1/4**	**12,16**
10	S	3/8" BSP	**Z AS 10 R 3/8**	**17,40**	**Z STA AS 10 R 3/8**	**13,34**
10	S	1/2" BSP	**Z AS 10 R 1/2**	**31,74**	**Z STA AS 10 R 1/2**	**17,85**
12	S	1/4" BSP	**Z AS 12 R 1/4**	**20,88**	**Z STA AS 12 R 1/4**	**16,06**
14	S	1/2" BSP	**Z AS 14 R 1/2**	**26,56**	**Z STA AS 14 R 1/2**	**19,00**
30	S	1"1/2 BSP	**Z AS 30 R 1 1/2**	**130,29**	---	*
38	S	1"1/4 BSP	**Z AS 38 R 1 1/4**	**127,89**	**Z STA AS 38 R 1 1/4**	**86,04**

Hasta fin de existencias / *Until end of stock* / Jusqu´à la fin du stock / *Fino ad esaurimento*

Racor recto rosca cilíndrica Métrica con junta

Straight male stud coupling Metric cylindrical with captive seal

Raccord union simple mâle cylindrique Métrique avec joint plat

Raccordo di estremitá diritto Metrico con guarnizione

TUBO PIPE	SERIE SERIES	ROSCA THREAD	Referencia Part n°	€	Referencia STA Part N° STA	€
6	L	M10x1	**Z AL 6 M 10X1 WD**	**11,98**	**Z STA AL 6 M 10X1 WD**	**8,17**
8	L	M12x1.5	**Z AL 8 M 12X1.5 WD**	**16,73**	**Z STA AL 8 M 12X1.5 WD**	**12,09**
10	L	M12x1.5	**Z AL 10 M 12X1.5 WD**	**22,21**	**Z STA AL 10 M 12X1.5 WD**	**16,31**
10	L	M14x1.5	**Z AL 10 M 14X1.5 WD**	**21,64**	**Z STA AL 10 M 14X1.5 WD**	**16,34**
10	L	M16x1.5	**Z AL 10 M 16X1.5 WD**	**21,87**	**Z STA AL 10 M 16X1.5 WD**	**15,97**
12	L	M16x1.5	**Z AL 12 M 16X1.5 WD**	**23,98**	**Z STA AL 12 M 16X1.5 WD**	**17,57**
12	L	M18x1.5	**Z AL 12 M 18X1.5 WD**	**21,64**	**Z STA AL 12 M 18X1.5 WD**	**16,46**
12	L	M22x1.5	**Z AL 12 M 22X1.5 WD**	**28,66**	**Z STA AL 12 M 22X1.5 WD**	**24,18**
15	L	M18x1.5	**Z AL 15 M 18X1.5 WD**	**31,46**	**Z STA AL 15 M 18X1.5 WD**	**22,94**
18	L	M22x1.5	**Z AL 18 M 22X1.5 WD**	**37,52**	**Z STA AL 18 M 22X1.5 WD**	**25,79**
22	L	M26x1.5	**Z AL 22 M 26X1.5 WD**	**47,95**	**Z STA AL 22 M 26X1.5 WD**	**32,64**
28	L	M33x2	**Z AL 28 M 33X2 WD**	**67,61**	**Z STA AL 28 M 33X2 WD**	**40,72**
35	L	M42x2	**Z AL 35 M 42X2 WD**	**113,46**	**Z STA AL 35 M 42X2 WD**	**66,31**
42	L	M48x2	**Z AL 42 M 48X2 WD**	**154,00**	**Z STA AL 42 M 48X2 WD**	**96,01**
6	S	M12x1.5	**Z AS 6 M 12X1.5 WD**	**25,00**	**Z STA AS 6 M 12X1.5 WD**	**19,92**
6	S	M14x1.5	**Z AS 6 M 14X1.5 WD**	**24,71**	**Z STA AS 6 M 14X1.5 WD**	**19,63**
8	S	M14x1.5	**Z AS 8 M 14X1.5 WD**	**27,70**	**Z STA AS 8 M 14X1.5 WD**	**22,20**
10	S	M16x1.5	**Z AS 10 M 16X1.5 WD**	**26,75**	**Z STA AS 10 M 16X1.5 WD**	**19,84**
12	S	M14x1.5	**Z AS 12 M 14X1.5 WD**	**28,36**	**Z STA AS 12 M 14X1.5 WD**	**20,91**
12	S	M18x1.5	**Z AS 12 M 18X1.5 WD**	**25,61**	**Z STA AS 12 M 18X1.5 WD**	**20,50**
14	S	M20x1.5	**Z AS 14 M 20X1.5 WD**	**39,51**	**Z STA AS 14 M 20X1.5 WD**	**28,52**
16	S	M22x1.5	**Z AS 16 M 22X1.5 WD**	**37,58**	**Z STA AS 16 M 22X1.5 WD**	**26,85**
20	S	M27x2	**Z AS 20 M 27X2 WD**	**50,74**	**Z STA AS 20 M 27X2 WD**	**33,70**
25	S	M33x2	**Z AS 25 M 33X2 WD**	**85,24**	**Z STA AS 25 M 33X2 WD**	**49,12**
30	S	M42x2	**Z AS 30 M 42X2 WD**	**112,11**	**Z STA AS 30 M 42X2 WD**	**64,26**
38	S	M48x2	**Z AS 38 M 48X2 WD**	**162,07**	**Z STA AS 38 M 48X2 WD**	**93,88**

Racor recto rosca UNF

Straight male stud coupling UNF

Raccord union simple mâle UNF

Raccordo di estremitá diritto UNF

TUBO PIPE	SERIE SERIES	ROSCA THREAD	Referencia Part n°	€	Referencia STA Part N° STA	€
8	L	7/16" UNF	**Z AL 8 7/16 UNF**	**25,17**	**Z STA AL 8 7/16 UNF**	**20,26**
10	L	7/16" UNF	**Z AL 10 7/16 UNF**	**26,77**	**Z STA AL 10 7/16 UNF**	**20,87**
12	L	3/4" UNF	**Z AL 12 3/4 UNF**	**27,83**	**Z STA AL 12 3/4 UNF**	**21,22**
12	L	9/16" UNF	**Z AL 12 9/16 UNF**	**23,76**	**Z STA AL 12 9/16 UNF**	**17,14**
15	L	3/4" UNF	**Z AL 15 3/4 UNF**	**37,48**	**Z STA AL 15 3/4 UNF**	**28,95**
18	L	7/8" UNF	**Z AL 18 7/8 UNF**	**38,52**	**Z STA AL 18 7/8 UNF**	**26,79**
22	L	1" 1/16 UNF	**Z AL 22 1 1/16 UNF**	**47,41**	**Z STA AL 22 1 1/16 UNF**	**32,09**
28	L	1" 5/16 UNF	**Z AL 28 1 5/16 UNF**	**76,15**	**Z STA AL 28 1 5/16 UNF**	**48,38**
35	L	1" 5/8 UNF	**Z AL 35 1 5/8 UNF**	**136,42**	**Z STA AL 35 1 5/8 UNF**	**89,27**
8	S	7/16" UNF	**Z AS 8 7/16 UNF**	**24,10**	**Z STA AS 8 7/16 UNF**	**18,59**
10	S	9/16" UNF	**Z AS 10 9/16 UNF**	**26,35**	**Z STA AS 10 9/16 UNF**	**19,45**
12	S	9/16" UNF	**Z AS 12 9/16 UNF**	**28,08**	**Z STA AS 12 9/16 UNF**	**21,49**
16	S	3/4" UNF	**Z AS 16 3/4 UNF**	**42,02**	**Z STA AS 16 3/4 UNF**	**29,92**
20	S	7/8" UNF	**Z AS 20 7/8 UNF**	**57,91**	**Z STA AS 20 7/8 UNF**	**40,87**
30	S	1" 5/16 UNF	**Z AS 30 1 5/16 UNF**	**125,01**	**Z STA AS 30 1 5/16 UNF**	**77,15**
25	S	1" 5/16 UNF	**Z AS 25 1 5/16 UNF**	**95,75**	**Z STA AS 25 1 5/16 UNF**	**999,00**
38	S	1" 5/8 UNF	**Z AS 38 1 5/8 UNF**	**206,88**	**Z STA AS 38 1 5/8 UNF**	**138,68**

***Consultar** / On request/ **Sur demande** / Su richiesta

RACORES DIN 2353

DIN 2353 Pipe fittings
Raccords à bague DIN 2353
Raccordi DIN 2353

Racor recto rosca cónica NPT

Straight male stud coupling NPT

Raccord union simple mâle NPT

Raccordo di estremitá diritto NPT

TUBO PIPE	SERIE SERIES	ROSCA THREAD	Referencia Part n°	€	Referencia STA Part N° STA	€
6	L	1/8"NPT	**Z AKL 6 1/8 NPT**	12,75	**Z STA AKL 6 1/8 NPT**	9,95
6	L	1/4"NPT	**Z AKL 6 1/4 NPT**	18,79	**Z STA AKL 6 1/4 NPT**	15,06
6	L	3/8"NPT	**Z AKL 6 3/8 NPT**	20,53	**Z STA AKL 6 3/8 NPT**	16,19
8	L	1/8"NPT	**Z AKL 8 1/8 NPT**	13,91	**Z STA AKL 8 1/8 NPT**	10,75
8	L	1/4"NPT	**Z AKL 8 1/4 NPT**	14,65	**Z STA AKL 8 1/4 NPT**	10,79
8	L	3/8"NPT	**Z AKL 8 3/8 NPT**	19,09	**Z STA AKL 8 3/8 NPT**	14,67
8	L	1/2"NPT	**Z AKL 8 1/2 NPT**	22,31	**Z STA AKL 8 1/2 NPT**	17,40
10	L	1/4"NPT	**Z AKL 10 1/4 NPT**	15,24	**Z STA AKL 10 1/4 NPT**	11,11
10	L	3/8"NPT	**Z AKL 10 3/8 NPT**	18,48	**Z STA AKL 10 3/8 NPT**	12,59
10	L	1/2"NPT	**Z AKL 10 1/2 NPT**	25,13	**Z STA AKL 10 1/2 NPT**	20,48
12	L	1/4"NPT	**Z AKL 12 1/4 NPT**	17,37	**Z STA AKL 12 1/4 NPT**	14,03
12	L	3/8"NPT	**Z AKL 12 3/8 NPT**	19,20	**Z STA AKL 12 3/8 NPT**	14,36
12	L	1/2"NPT	**Z AKL 12 1/2 NPT**	20,79	**Z STA AKL 12 1/2 NPT**	16,23
15	L	3/8"NPT	**Z AKL 15 3/8 NPT**	26,03	**Z STA AKL 15 3/8 NPT**	20,13
15	L	1/2"NPT	**Z AKL 15 1/2 NPT**	26,78	**Z STA AKL 15 1/2 NPT**	20,17
18	L	1/2"NPT	**Z AKL 18 1/2 NPT**	33,32	**Z STA AKL 18 1/2 NPT**	25,39
18	L	3/4"NPT	**Z AKL 18 3/4 NPT**	41,94	**Z STA AKL 18 3/4 NPT**	30,21
22	L	3/4"NPT	**Z AKL 22 3/4 NPT**	43,94	**Z STA AKL 22 3/4 NPT**	28,62
28	L	1"NPT	**Z AKL 28 1 NPT**	68,14	**Z STA AKL 28 1 NPT**	39,30
35	L	1"1/4NPT	**Z AKL 35 1 1/4 NPT**	96,41	**Z STA AKL 35 1 1/4 NPT**	49,26
42	L	1"1/2NPT	**Z AKL 42 1 1/2 NPT**	141,82	**Z STA AKL 42 1 1/2 NPT**	84,33
6	S	1/8"NPT	**Z AKS 6 1/8 NPT**	20,69	**Z STA AKS 6 1/8 NPT**	15,61
6	S	1/4"NPT	**Z AKS 6 1/4 NPT**	18,13	**Z STA AKS 6 1/4 NPT**	13,16
6	S	3/8"NPT	**Z AKS 6 3/8 NPT**	25,67	**Z STA AKS 6 3/8 NPT**	21,33
8	S	1/4"NPT	**Z AKS 8 1/4 NPT**	19,03	**Z STA AKS 8 1/4 NPT**	13,88
8	S	3/8"NPT	**Z AKS 8 3/8 NPT**	28,36	**Z STA AKS 8 3/8 NPT**	22,86
8	S	1/2"NPT	**Z AKS 8 1/2 NPT**	25,60	**Z STA AKS 8 1/2 NPT**	20,10
10	S	1/4"NPT	**Z AKS 10 1/4 NPT**	22,23	**Z STA AKS 10 1/4 NPT**	15,32
10	S	3/8"NPT	**Z AKS 10 3/8 NPT**	21,87	**Z STA AKS 10 3/8 NPT**	14,96
10	S	1/2"NPT	**Z AKS 10 1/2 NPT**	27,55	**Z STA AKS 10 1/2 NPT**	20,67
12	S	1/4"NPT	**Z AKS 12 1/4 NPT**	25,74	**Z STA AKS 12 1/4 NPT**	18,28
12	S	3/8"NPT	**Z AKS 12 3/8 NPT**	26,63	**Z STA AKS 12 3/8 NPT**	19,17
12	S	1/2"NPT	**Z AKS 12 1/2 NPT**	27,08	**Z STA AKS 12 1/2 NPT**	19,63
14	S	1/2"NPT	**Z AKS 14 1/2 NPT**	35,12	**Z STA AKS 14 1/2 NPT**	25,64
16	S	1/2"NPT	**Z AKS 16 1/2 NPT**	33,62	**Z STA AKS 16 1/2 NPT**	26,23
16	S	3/4"NPT	**Z AKS 16 3/4 NPT**	39,85	**Z STA AKS 16 3/4 NPT**	27,74
20	S	1/2"NPT	**Z AKS 20 1/2 NPT**	49,39	**Z STA AKS 20 1/2 NPT**	32,35
20	S	3/4"NPT	**Z AKS 20 3/4 NPT**	61,99	**Z STA AKS 20 3/4 NPT**	47,48
20	S	1"NPT	**Z AKS 20 1 NPT**	70,57	**Z STA AKS 20 1 NPT**	53,54
25	S	3/4"NPT	**Z AKS 25 3/4 NPT**	91,55	**Z STA AKS 25 3/4 NPT**	55,42
25	S	1"NPT	**Z AKS 25 1 NPT**	82,25	**Z STA AKS 25 1 NPT**	47,47
30	S	1"NPT	**Z AKS 30 1 NPT**	126,44	**Z STA AKS 30 1 NPT**	80,61
30	S	1"1/4NPT	**Z AKS 30 1 1/4 NPT**	111,73	**Z STA AKS 30 1 1/4 NPT**	63,87
38	S	1"1/2NPT	**Z AKS 38 1 1/2 NPT**	156,97	**Z STA AKS 38 1 1/2 NPT**	93,28

Racor recto rosca cónica BSPT

Straight male stud coupling BSPT

Raccord union simple mâle conique

Raccordo di estremitá diritto BSP conico

TUBO PIPE	SERIE SERIES	ROSCA THREAD	Referencia Part n°	€	Referencia STA Part N° STA	€
6	LL	1/8" BSPT	**Z AKLL 6 R 1/8**	*	---	*
8	LL	1/8" BSPT	**Z AKLL 8 R 1/8**	*	---	*
6	L	1/8" BSPT	**Z AKL 6 R 1/8**	12,15	**Z STA AKL 6 R 1/8**	9,26
6	L	1/4" BSPT	**Z AKL 6 R 1/4**	13,49	**Z STA AKL 6 R 1/4**	9,15
8	L	1/8" BSPT	**Z AKL 8 R 1/8**	15,21	**Z STA AKL 8 R 1/8**	10,30
8	L	1/4" BSPT	**Z AKL 8 R 1/4**	13,47	**Z STA AKL 8 R 1/4**	9,49
6	L	3/8" BSPT NEW	**Z AKL 6 R 3/8**	21,50	**Z STA AKL 6 R 3/8**	17,16
8	L	3/8" BSPT	**Z AKL 8 R 3/8**	17,20	**Z STA AKL 8 R 3/8**	12,29
10	L	1/4" BSPT	**Z AKL 10 R 1/4**	14,46	**Z STA AKL 10 R 1/4**	10,63
10	L	3/8" BSPT	**Z AKL 10 R 3/8**	14,83	**Z STA AKL 10 R 3/8**	10,54
10	L	1/2" BSPT	**Z AKL 10 R 1/2**	21,06	**Z STA AKL 10 R 1/2**	15,16
12	L	1/4" BSPT	**Z AKL 12 R 1/4**	17,40	**Z STA AKL 12 R 1/4**	13,53
12	L	3/8" BSPT	**Z AKL 12 R 3/8**	16,25	**Z STA AKL 12 R 3/8**	13,39
12	L	1/2" BSPT	**Z AKL 12 R 1/2**	19,08	**Z STA AKL 12 R 1/2**	14,82
15	L	3/8" BSPT	**Z AKL 15 R 3/8**	25,15	**Z STA AKL 15 R 3/8**	18,92
15	L	1/2" BSPT	**Z AKL 15 R 1/2**	24,10	**Z STA AKL 15 R 1/2**	17,29
18	L	1/2" BSPT	**Z AKL 18 R 1/2**	27,96	**Z STA AKL 18 R 1/2**	19,29
22	L	3/4" BSPT	**Z AKL 22 R 3/4**	36,97	**Z STA AKL 22 R 3/4**	24,36
28	L	1" BSPT	**Z AKL 28 R 1**	63,75	**Z STA AKL 28 R 1**	48,38
35	L	1"1/4 BSPT	**Z AKL 35 R 1 1/4**	96,86	**Z STA AKL 35 R 1 1/4**	54,98
42	L	1"1/4 BSPT	**Z AKL 42 R 1 1/4**	115,07	**Z STA AKL 42 R 1 1/4**	64,29
6	S	1/4" BSPT	**Z AKS 6 R 1/4**	17,85	**Z STA AKS 6 R 1/4**	12,77
8	S	1/4" BSPT	**Z AKS 8 R 1/4**	16,57	**Z STA AKS 8 R 1/4**	11,88
10	S	3/8" BSPT	**Z AKS 10 R 3/8**	32,96	**Z STA AKS 10 R 3/8**	26,05
14	S	1/2" BSPT	**Z AKS 14 R 1/2**	62,37	**Z STA AKS 14 R 1/2**	51,38
16	S	1/2" BSPT	**Z AKS 16 R 1/2**	37,95	**Z STA AKS 16 R 1/2**	25,84
20	S	3/4" BSPT	**Z AKS 20 R 3/4**	54,08	**Z STA AKS 20 R 3/4**	37,04
25	S	1" BSPT	**Z AKS 25 R 1**	87,22	**Z STA AKS 25 R 1**	51,09
30	S	1"1/4 BSPT	**Z AKS 30 R 1 1/4**	209,93	**Z STA AKS 30 R 1 1/4**	162,08

Racor recto rosca cónica Métrica

Straight male stud coupling Metric

Raccord union simple mâle Métrique conique

Raccordo di estremitá diritto Metrico conico

TUBO PIPE	SERIE SERIES	ROSCA THREAD	Referencia Part n°	€
6	LL	M10X1	**Z AKLL 6 M10X1**	**16,21**
6	L	M10X1	**Z AKL 6 M 10X1**	**16,35**
8	L	M12X1.5	**Z AKL 8 M 12X1.5**	**21,08**
10	L	M14X1.5	**Z AKL 10 M 14X1.5**	**23,48**
12	L	M16X1.5	**Z AKL 12 M 16X1.5**	**25,67**
15	L	M18X1.5	**Z AKL 15 M 18X1.5**	**35,12**
18	L	M22X1.5	**Z AKL 18 M 22X1.5**	**45,93**
22	L	M26X1.5	**Z AKL 22 M 26X1.5**	**38,36**

*Consultar / On request / Sur demande / Su richiesta

RACORES DIN 2353

DIN 2353 Pipe fittings
Raccords à bague DIN 2353
Raccordi DIN 2353

Racor en codo rosca cónica BSPT

Male stud elbow BSPT

Raccord union coude mâle gaz conique

Raccordo di estremitá a 90° BSP conico

TUBO PIPE	SERIE SERIES	ROSCA THREAD	Referencia Part n°	€	Referencia STA Part N° STA	€
6	LL	1/8" BSPT	Z CKLL 6 R 1/8	24,62	---	*
6	L	1/8" BSPT	Z CKL 6 R 1/8	19,30	Z STA CKL 6 R 1/8	14,96
6	L	1/4" BSPT	Z CKL 6 R 1/4	18,80	Z STA CKL 6 R 1/4	14,46
8	L	1/8" BSPT	Z CKL 8 R 1/8	22,76	Z STA CKL 8 R 1/8	19,89
8	L	1/4" BSPT	Z CKL 8 R 1/4	20,72	Z STA CKL 8 R 1/4	18,81
8	L	3/8" BSPT	Z CKL 8 R 3/8	27,79	Z STA CKL 8 R 3/8	24,21
8	L	1/2" BSPT	Z CKL 8 R 1/2	39,12	Z STA CKL 8 R 1/2	34,21
10	L	1/8" BSPT	Z CKL 10 R 1/8	32,64	Z STA CKL 10 R 1/8	31,46
10	L	1/4" BSPT	Z CKL 10 R 1/4	23,28	Z STA CKL 10 R 1/4	19,96
10	L	3/8" BSPT	Z CKL 10 R 3/8	24,41	Z STA CKL 10 R 3/8	21,51
10	L	1/2" BSPT	Z CKL 10 R 1/2	29,10	Z STA CKL 10 R 1/2	23,20
12	L	1/4" BSPT	Z CKL 12 R 1/4	27,72	Z STA CKL 12 R 1/4	22,17
12	L	3/8" BSPT	Z CKL 12 R 3/8	27,96	Z STA CKL 12 R 3/8	24,39
12	L	1/2" BSPT	Z CKL 12 R 1/2	31,00	Z STA CKL 12 R 1/2	30,35
15	L	3/8" BSPT	Z CKL 15 R 3/8	51,03	Z STA CKL 15 R 3/8	42,51
15	L	1/2" BSPT	Z CKL 15 R 1/2	40,47	Z STA CKL 15 R 1/2	31,95
18	L	1/2" BSPT	Z CKL 18 R 1/2	53,93	Z STA CKL 18 R 1/2	42,75
22	L	3/4" BSPT	Z CKL 22 R 3/4	89,72	Z STA CKL 22 R 3/4	77,17
28	L	1" BSPT	Z CKL 28 R 1	192,05	Z STA CKL 28 R 1	163,21
35	L	1"1/4 BSPT	Z CKL 35 R 1 1/4	333,80	Z STA CKL 35 R 1 1/4	286,65
6	S	1/4" BSPT	Z CKS 6 R 1/4	27,00	Z STA CKS 6 R 1/4	21,93
8	S	1/4" BSPT	Z CKS 8 R 1/4	27,18	Z STA CKS 8 R 1/4	23,30
8	S	3/8" BSPT	Z CKS 8 R 3/8 *	37,15	---	*
8	S	1/2" BSPT	Z CKS 8 R 1/2	37,01	Z STA CKS 8 R 1/2	31,51
10	S	1/4" BSPT	Z CKS 10 R 1/4	40,80	Z STA CKS 10 R 1/4	35,10
10	S	3/8" BSPT	Z CKS 10 R 3/8	32,69	Z STA CKS 10 R 3/8	25,78
10	S	1/2" BSPT	Z CKS 10 R 1/2*	50,89	---	*
12	S	3/8" BSPT	Z CKS 12 R 3/8	38,98	Z STA CKS 12 R 3/8	33,34
14	S	1/2" BSPT	Z CKS 14 R 1/2	51,84	Z STA CKS 14 R 1/2	40,85
16	S	1/2" BSPT	Z CKS 16 R 1/2	61,23	Z STA CKS 16 R 1/2	49,12
20	S	3/4" BSPT	Z CKS 20 R 3/4	91,43	Z STA CKS 20 R 3/4	74,56
25	S	1" BSPT	Z CKS 25 R 1	159,48	Z STA CKS 25 R 1	134,28
30	S	1"1/4 BSPT	Z CKS 30 R 1 1/4	337,43	Z STA CKS 30 R 1 1/4	289,58
38	S	1"1/2 BSPT	Z CKS 38 R 1 1/2	404,10	Z STA CKS 38 R 1 1/2	357,01

***Hasta fin de existencias** / *Until end of stock* / Jusqu´à la fin du stock / *Fino ad esaurimento*

Racor en codo orientable BSP

90° Adjustable male stud elbow BSP

Coude orientable mâle BSP

Raccordo a 90° orientabile maschio BSP

TUBO PIPE	SERIE SERIES	ROSCA THREAD	Referencia Part n°	€	Referencia STA Part N° STA	€
6	L	1/8" BSP	Z WEE 6L R 1/8	22,63	Z STA WEE 6L R 1/8	21,00
8	L	1/4" BSP	Z WEE 8L R 1/4	32,78	Z STA WEE 8L R 1/4	30,90
10	L	1/4" BSP	Z WEE 10L R 1/4	36,48	Z STA WEE 10L R 1/4	33,27
12	L	3/8" BSP	Z WEE 12L R 3/8	47,78	Z STA WEE 12L R 3/8	45,00
15	L	1/2" BSP	Z WEE 15L R 1/2	88,93	Z STA WEE 15L R 1/2	87,40
18	L	1/2" BSP	Z WEE 18L R 1/2	90,72	Z STA WEE 18L R 1/2	90,58
22	L	3/4" BSP	Z WEE 22L R 3/4	119,39	Z STA WEE 22L R 3/4	106,12
16	S	1/2" BSP	Z WEE 16S R 1/2	84,82	Z STA WEE 16S R 1/2	78,88
20	S	3/4" BSP	Z WEE 20S R 3/4	128,06	Z STA WEE 20S R 3/4	120,38
25	S	1" BSP	Z WEE 25S R 1	198,50	Z STA WEE 25S R 1	182,73

Racor en codo rosca cónica NPT

Male stud elbow NPT

Raccord union coude mâle NPT

Raccordo di estremitá a 90° NPT

TUBO PIPE	SERIE SERIES	ROSCA THREAD	Referencia Part n°	€	Referencia STA Part N° STA	€
6	L	1/8" NPT	Z CKL 6 1/8 NPT	21,43	Z STA CKL 6 1/8 NPT	17,09
6	L	1/4" NPT	Z CKL 6 1/4 NPT	21,95	Z STA CKL 6 1/4 NPT	17,61
8	L	1/4" NPT	Z CKL 8 1/4 NPT	22,36	Z STA CKL 8 1/4 NPT	18,16
10	L	1/4" NPT	Z CKL 10 1/4 NPT	25,09	Z STA CKL 10 1/4 NPT	19,20
12	L	1/4" NPT	Z CKL 12 1/4 NPT	32,39	Z STA CKL 12 1/4 NPT	25,78
12	L	3/8" NPT	Z CKL 12 3/8 NPT	32,75	Z STA CKL 12 3/8 NPT	26,14
12	L	1/2" NPT	Z CKL 12 1/2 NPT	34,98	Z STA CKL 12 1/2 NPT	28,36
15	L	1/2" NPT	Z CKL 15 1/2 NPT	40,94	Z STA CKL 15 1/2 NPT	32,41
18	L	1/2" NPT	Z CKL 18 1/2 NPT	82,73	Z STA CKL 18 1/2 NPT	71,00
22	L	3/4" NPT	Z CKL 22 3/4 NPT	88,06	Z STA CKL 22 3/4 NPT	72,74
28	L	1" NPT	Z CKL 28 1 NPT	125,45	Z STA CKL 28 1 NPT	96,61
35	L	1"1/4 NPT	Z CKL 35 1 1/4 NPT	270,41	Z STA CKL 35 1 1/4 NPT	223,26
42	L	1"1/2 NPT	Z CKL 42 1 1/2 NPT	335,31	Z STA CKL 42 1 1/2 NPT	277,32
6	S	1/4" NPT	Z CKS 6 1/4 NPT	25,50	Z STA CKS 6 1/4 NPT	20,43
8	S	1/4" NPT	Z CKS 8 1/4 NPT	32,17	Z STA CKS 8 1/4 NPT	26,67
10	S	3/8" NPT	Z CKS 10 3/8 NPT	39,27	Z STA CKS 10 3/8 NPT	32,37
12	S	3/8" NPT	Z CKS 12 3/8 NPT	37,48	Z STA CKS 12 3/8 NPT	30,03
12	S	1/2" NPT	Z CKS 12 1/2 NPT	36,30	Z STA CKS 12 1/2 NPT	29,38
14	S	1/2" NPT	Z CKS 14 1/2 NPT	66,18	Z STA CKS 14 1/2 NPT	55,19
16	S	1/2" NPT	Z CKS 16 1/2 NPT	64,83	Z STA CKS 16 1/2 NPT	52,73
20	S	3/4" NPT	Z CKS 20 3/4 NPT	87,80	Z STA CKS 20 3/4 NPT	70,77
25	S	1" NPT	Z CKS 25 1 NPT	174,51	Z STA CKS 25 1 NPT	138,38
30	S	1"1/4 NPT	Z CKS 30 1 1/4 NPT	337,70	Z STA CKS 30 1 1/4 NPT	289,84
38	S	1"1/2 NPT	Z CKS 38 1 1/2 NPT	337,03	Z STA CKS 38 1 1/2 NPT	268,84

Racor en codo rosca cónica Métrica

Male stud elbow metrical conical

Raccord équerre mâle métrique

Raccordo di estremitá a 90° Metrico conico

TUBO PIPE	SERIE SERIES	ROSCA THREAD	Referencia Part n°	€
6	L	M10X1	Z CKL 6 M 10X1	26,35
8	L	M12X1.5	Z CKL 8 M 12X1.5	33,95
10	L	M14X1.5	Z CKL 10 M 14X1.5	36,58
12	L	M16X1.5	Z CKL 12 M 16X1.5	42,47
15	L	M18X1.5	Z CKL 15 M 18X1.5	59,28
18	L	M22X1.5	Z CKL 18 M 22X1.5	68,21
6	S	M12X1.5	Z CKS 6 M 12X1.5	27,43
8	S	M14X1.5	Z CKS 8 M 14X1.5	49,23
10	S	M16X1.5	Z CKS 10 M 16X1.5	50,91
12	S	M18X1.5	Z CKS 12 M 18X1.5	52,10
14	S	M20X1.5	Z CKS 14 M 20X1.5	53,35
16	S	M22X1.5	Z CKS 16 M 22X1.5	100,84

***Consultar** / On request**/ Sur demande** / Su richiesta

RACORES DIN 2353

DIN 2353 Pipe fittings
Raccords à bague DIN 2353
Raccordi DIN 2353

Racor en L rosca cónica BSPT

Male stud barrel TEE BSPT

Raccord TÉ mâle gaz conique latéral

Raccordo di estremitá a L BSP conico

TUBO PIPE	SERIE SERIES	ROSCA THREAD	Referencia Part n°	€
6	L	1/8" BSPT	**Z LKL 6 R 1/8**	**47,28**
8	L	1/4" BSPT	**Z LKL 8 R 1/4**	**49,97**
10	L	1/4" BSPT	**Z LKL 10 R 1/4**	**53,62**
12	L	3/8" BSPT	**Z LKL 12 R 3/8**	**56,75**
15	L	1/2" BSPT	**Z LKL 15 R 1/2**	**79,69**
18	L	1/2" BSPT	**Z LKL 18 R 1/2**	**131,29**
6	S	1/4" BSPT	**Z LKS 6 R 1/4**	**51,43**
8	S	1/4" BSPT	**Z LKS 8 R 1/4**	**56,91**
10	S	3/8" BSPT	**Z LKS 10 R 3/8**	**67,00**
12	S	3/8" BSPT	**Z LKS 12 R 3/8**	**71,43**
14	S	1/2" BSPT	**Z LKS 14 R 1/2**	**87,80**
16	S	1/2" BSPT	**Z LKS 16 R 1/2**	**110,76**

Racor en L rosca cónica Métrica

Male stud barrel TEE Metric

Raccord Té mâle Métrique latéral

Raccordo di estremitá a L Metrico conico

TUBO PIPE	SERIE SERIES	ROSCA THREAD	Referencia Part n°	€
6	L	M10X1	**Z LKL 6 M 10X1**	*
8	L	M12X1.5	**Z LKL 8 M 12X1.5**	*
10	L	M14X1.5	**Z LKL 10 M 14X1.5**	*
12	L	M16X1.5	**Z LKL 12 M 16X1.5**	*
15	L	M18X1.5	**Z LKL 15 M 18X1.5**	*
18	L	M22X1.5	**Z LKL 18 M 22X1.5**	*
6	S	M12X1.5	**Z LKS 6 M 12X1.5**	*
8	S	M14X1.5	**Z LKS 8 M 14X1.5**	*
10	S	M16X1.5	**Z LKS 10 M 16X1.5**	*
12	S	M18X1.5	**Z LKS 12 M 18X1.5**	*
14	S	M20X1.5	**Z LKS 14 M 20X1.5**	*
16	S	M22X1.5	**Z LKS 16 M 22X1.5**	*

*Consultar / On request / Sur demande / Su richiesta

RACORES DIN 2353

DIN 2353 Pipe fittings
Raccords à bague DIN 2353
Raccordi DIN 2353

Racor en T rosca cónica BSPT

Male stud branch TEE BSPT

Raccord TÉ mâle gaz conique au centre

Raccordo di estremitá a T BSP conico

TUBO PIPE	SERIE SERIES	ROSCA THREAD	Referencia Part n°	€
6	L	1/8" BSPT	**Z FKL 6 R 1/8**	**41,12**
8	L	1/4" BSPT	**Z FKL 8 R 1/4**	**37,59**
10	L	1/4" BSPT	**Z FKL 10 R 1/4**	**48,14**
12	L	3/8" BSPT	**Z FKL 12 R 3/8**	**54,31**
15	L	1/2" BSPT	**Z FKL 15 R 1/2**	**81,09**
18	L	1/2" BSPT	**Z FKL 18 R 1/2**	**102,66**
6	S	1/4" BSPT	**Z FKS 6 R 1/4**	**48,22**
8	S	1/4" BSPT	**Z FKS 8 R 1/4**	**59,44**
10	S	3/8" BSPT	**Z FKS 10 R 3/8**	**60,79**
12	S	3/8" BSPT	**Z FKS 12 R 3/8**	**71,58**
14	S	1/2" BSPT	**Z FKS 14 R 1/2**	**94,56**
16	S	1/2"BSPT	**Z FKS 16 1/2**	**110,76**

Racor en T rosca cónica Métrica

Male stud branch TEE Metrical

Raccord TÉ mâle Métrique au centre

Raccordo di estremitá a T Metrico conico

TUBO PIPE	SERIE SERIES	ROSCA THREAD	Referencia Part n°	€
6	L	M10X1	**Z FKL 6 M 10X1**	*
8	L	M12X1.5	**Z FKL 8 M 12X1.5**	*
10	L	M14X1.5	**Z FKL 10 M 14X1.5**	*
12	L	M16X1.5	**Z FKL 12 M 16X1.5**	*
15	L	M18X1.5	**Z FKL 15 M 18X1.5**	*
6	S	M12X1.5	**Z FKS 6 M 12X1.5**	*
8	S	M14X1.5	**Z FKS 8 M 14X1.5**	*
10	S	M16X1.5	**Z FKS 10 M 16X1.5**	*
12	S	M18X1.5	**Z FKS 12 M 18X1.5**	*
14	S	M20X1.5	**Z FKS 14 M 20X1.5**	*
16	S	M22X1.5	**Z FKS 16 M 22X1.5**	*

Racor en T rosca cónica NPT

Male stud branch TEE NPT

Raccord TÉ mâle NPT au centre

Raccordo di estremitá a T NPT

TUBO PIPE	SERIE SERIES	ROSCA THREAD	Referencia Part n°	€
6	L	1/8" NPT	**Z FKL 6 R 1/8 NPT**	**47,28**
8	L	1/4" NPT	**Z FKL 8 R 1/4 NPT**	**43,54**
10	L	1/4" NPT	**Z FKL 10 R 1/4 NPT**	**58,93**
12	L	3/8" NPT	**Z FKL 12 R 3/8 NPT**	**66,18**
18	L	1/2" NPT	**Z FKL 18 R 1/2 NPT**	**129,68**
22	L	3/4" NPT	**Z FKL 22 R 3/4 NPT**	**164,79**
28	L	1" NPT	**Z FKL 28 R 1 NPT**	**200,43**
35	L	1" 1/4 NPT	**Z FKL 35 R 1 1/4 NPT**	**383,54**
42	L	1" 1/2 NPT	**Z FKL 42 R 1 1/2 NPT**	**395,92**
6	S	1/4" NPT	**Z FKS 6 R 1/4 NPT**	**52,01**
10	S	3/8" NPT	**Z FKS 10 R 3/8 NPT**	**56,91**
12	S	3/8" NPT	**Z FKS 12 R 3/8 NPT**	**74,29**
14	S	1/2" NPT	**Z FKS 14 R 1/2 NPT**	**74,63**
16	S	1/2" NPT	**Z FKS 16 R 1/2 NPT**	**126,97**
20	S	3/4" NPT	**Z FKS 20 R 3/4 NPT**	**148,47**
25	S	1" NPT	**Z FKS 25 R 1 NPT**	**215,28**
30	S	1" 1/4 NPT	**Z FKS 30 R 1 1/4 NPT**	**346,42**
38	S	1"1/2 NPT	**Z FKS 38 R 1 1/2 NPT**	**532,01**

***Consultar** / On request**/ Sur demande** / Su richiesta

RACORES DIN 2353

DIN 2353 Pipe fittings
Raccords à bague DIN 2353
Raccordi DIN 2353

Racor de reducción con TL Métrica (serie ligera)

Standpipe reducer swivel female (light series)
Raccord union simple femelle tournante Métrique (série légère)
Raccordo di riduzione con cono 24° (serie leggera)

TUBO PIPE	TUBO PIPE	SERIE SERIES	Referencia Part n°	€	Referencia Part n°	€
8	6	L	Z KORL 8-6 TLM	28,46	Z STA KORL 8-6 TLM	24,12
10	6	L	Z KORL 10-6 TLM	26,39	Z STA KORL 10-6 TLM	22,05
12	6	L	Z KORL 12-6 TLM	36,52	Z STA KORL 12-6 TLM	32,18
12	8	L	Z KORL 12-8 TLM	27,42	Z STA KORL 12-8 TLM	22,53
12	10	L	Z KORL 12-10 TLM	28,46	Z STA KORL 12-10 TLM	22,56
15	6	L	Z KORL 15-6 TLM	41,49	Z STA KORL 15-6 TLM	37,15
15	8	L	Z KORL 15-8 TLM	34,15	Z STA KORL 15-8 TLM	29,24
15	10	L	Z KORL 15-10 TLM	42,54	Z STA KORL 15-10 TLM	36,64
15	12	L	Z KORL 15-12 TLM	28,47	Z STA KORL 15-12 TLM	22,87
18	8	L	Z KORL 18-8 TLM	47,13	Z STA KORL 18-8 TLM	42,23
18	10	L	Z KORL 18-10 TLM	40,98	Z STA KORL 18-10 TLM	36,75
18	12	L	Z KORL 18-12 TLM	36,07	Z STA KORL 18-12 TLM	30,85
18	15	L	Z KORL 18-15 TLM	40,36	Z STA KORL 18-15 TLM	39,95
22	10	L	Z KORL 22-10 TLM	41,29	Z STA KORL 22-10 TLM	35,39
22	12	L	Z KORL 22-12 TLM	40,89	Z STA KORL 22-12 TLM	34,30
22	15	L	Z KORL 22-15 TLM	47,60	Z STA KORL 22-15 TLM	39,23
22	18	L	Z KORL 22-18 TLM	49,13	Z STA KORL 22-18 TLM	48,11
28	10	L	Z KORL 28-10 TLM	73,29	Z STA KORL 28-10 TLM	67,39
28	12	L	Z KORL 28-12 TLM	57,27	Z STA KORL 28-12 TLM	50,66
28	15	L	Z KORL 28-15 TLM	83,62	Z STA KORL 28-15 TLM	75,09
28	18	L	Z KORL 28-18 TLM	59,91	Z STA KORL 28-18 TLM	48,18
28	22	L	Z KORL 28-22 TLM	61,10	Z STA KORL 28-22 TLM	58,44
35	12	L	Z KORL 35-12 TLM	107,92	Z STA KORL 35-12 TLM	101,31
35	22	L	Z KORL 35-22 TLM	119,67	Z STA KORL 35-22 TLM	104,36
35	28	L	Z KORL 35-28 TLM	108,29	Z STA KORL 35-28 TLM	79,45
42	22	L	Z KORL 42-22 TLM	148,46	Z STA KORL 42-22 TLM	133,14
42	28	L	Z KORL 42-28 TLM	149,09	Z STA KORL 42-28 TLM	120,25
42	35	L	Z KORL 42-35 TLM	160,61	Z STA KORL 42-35 TLM	113,46

Racor de reducción con TL Métrica (serie pesada)

Standpipe reducer swivel female (heavy series)
Raccord union simple femelle tournante Métrique (série lourde)
Raccordo di riduzione con cono 24° (serie pesante)

TUBO PIPE	TUBO PIPE	SERIE SERIES	Referencia Part n°	€	Referencia Part n°	€
8	6	S	Z KORS 8-6 TLM	35,66	Z STA KORS 8-6 TLM	30,59
10	6	S	Z KORS 10-6 TLM	38,48	Z STA KORS 10-6 TLM	33,41
10	8	S	Z KORS 10-8 TLM	39,85	Z STA KORS 10-8 TLM	34,35
12	6	S	Z KORS 12-6 TLM	40,39	Z STA KORS 12-6 TLM	35,32
12	8	S	Z KORS 12-8 TLM	40,39	Z STA KORS 12-8 TLM	34,89
12	10	S	Z KORS 12-10 TLM	44,58	Z STA KORS 12-10 TLM	37,67
14	10	S	Z KORS 14-10 TLM	45,76	Z STA KORS 14-10 TLM	38,85
14	12	S	Z KORS 14-12 TLM	46,75	Z STA KORS 14-12 TLM	39,29
16	6	S	Z KORS 16-6 TLM	51,50	Z STA KORS 16-6 TLM	46,43
16	8	S	Z KORS 16-8 TLM	48,50	Z STA KORS 16-8 TLM	43,00
16	10	S	Z KORS 16-10 TLM	47,39	Z STA KORS 16-10 TLM	40,48
16	12	S	Z KORS 16-12 TLM	38,68	Z STA KORS 16-12 TLM	35,95
20	8	S	Z KORS 20-8 TLM	63,36	Z STA KORS 20-8 TLM	57,86
20	10	S	Z KORS 20-10 TLM	61,27	Z STA KORS 20-10 TLM	54,36
20	12	S	Z KORS 20-12 TLM	58,23	Z STA KORS 20-12 TLM	55,73
20	14	S	Z KORS 20-14 TLM	65,09	Z STA KORS 20-14 TLM	54,09
20	16	S	Z KORS 20-16 TLM	53,71	Z STA KORS 20-16 TLM	52,59
25	12	S	Z KORS 25-12 TLM	81,44	Z STA KORS 25-12 TLM	73,99
25	16	S	Z KORS 25-16 TLM	88,48	Z STA KORS 25-16 TLM	76,37
25	20	S	Z KORS 25-20 TLM	95,43	Z STA KORS 25-20 TLM	77,21
30	16	S	Z KORS 30-16 TLM	140,34	Z STA KORS 30-16 TLM	128,23
30	20	S	Z KORS 30-20 TLM	141,70	Z STA KORS 30-20 TLM	119,59
30	25	S	Z KORS 30-25 TLM	149,81	Z STA KORS 30-25 TLM	113,68
38	20	S	Z KORS 38-20 TLM	173,96	Z STA KORS 38-20 TLM	156,93
38	25	S	Z KORS 38-25 TLM	195,19	Z STA KORS 38-25 TLM	159,06
38	30	S	Z KORS 38-30 TLM	205,18	Z STA KORS 38-30 TLM	154,68

RACORES DIN 2353

DIN 2353 Pipe fittings
Raccords à bague DIN 2353
Raccordi DIN 2353

Reducción con rosca M-HF BSP con junta plana

Male-female reducing adaptor BSP cylindrical with flat seal

Raccord réduction mâle gaz-fem gaz avec joint plat

Adattatore di riduzione filettato maschio - femmina BSP con guarnizione piatta

ROSCA (H) THREAD (F)	ROSCA (M) THREAD (M)	Referencia Part n°	€
1/4"BSP	1/8"BSP	**Z RI-R 1/8 R 1/4WD**	**14,75**
1/8"BSP	1/4"BSP	**Z RI-R 1/4 R 1/8WD**	**14,96**
3/8"BSP	1/4"BSP	**Z RI-R 1/4 R 3/8WD**	**18,90**
1/2"BSP	1/4"BSP	**Z RI-R 1/4 R 1/2WD**	**21,74**
1/8"BSP	3/8"BSP	**Z RI-R 3/8 R 1/8WD**	**19,99**
1/4"BSP	3/8"BSP	**Z RI-R 3/8 R 1/4WD**	**17,42**
1/2"BSP	3/8"BSP	**Z RI-R 3/8 R 1/2WD**	**21,96**
3/4"BSP	3/8"BSP	**Z RI-R 3/8 R 3/4WD**	**30,91**
1/8"BSP	1/2"BSP	**Z RI-R 1/2 R 1/8WD**	**25,79**
1/4"BSP	1/2"BSP	**Z RI-R 1/2 R 1/4WD**	**18,90**
3/8"BSP	1/2"BSP	**Z RI-R 1/2 R 3/8WD**	**21,62**
3/4"BSP	1/2"BSP	**Z RI-R 1/2 R 3/4WD**	**31,21**
3/8"BSP	3/4"BSP	**Z RI-R 3/4 R 3/8WD**	**30,46**
1/2"BSP	3/4"BSP	**Z RI-R 3/4 R 1/2WD**	**32,33**
1"BSP	3/4"BSP	**Z RI-R 3/4 R 1WD**	**54,58**
1/4"BSP	1"BSP	**Z RI-R 1 R 1/4WD**	**39,30**
3/8"BSP	1"BSP	**Z RI-R 1 R 3/8WD**	**39,45**
1/2"BSP	1"BSP	**Z RI-R 1 R 1/2WD**	**37,23**
3/4"BSP	1"BSP	**Z RI-R 1 R 3/4WD**	**52,37**
1"1/4 BSP	1"BSP	**Z RI-R 1 R 1 1/4WD**	**125,47**
1/2"BSP	1"1/4 BSP	**Z RI-R 1 1/4 R 1/2WD**	**67,00**
3/4"BSP	1"1/4 BSP	**Z RI-R 1 1/4 R 3/4WD**	**71,66**
1"BSP	1"1/4BSP	**Z RI-R 1 1/4 R 1WD**	**96,17**
1"1/2 BSP	1"1/4 BSP	**Z RI-R 1 1/4 R 1 1/2WD**	**125,25**
1/2"BSP	1"1/2 BSP	**Z RI-R 1 1/2 R 1/2WD**	**93,21**
3/4"BSP	1"1/2 BSP	**Z RI-R 1 1/2 R 3/4WD**	**89,15**
1"BSP	1"1/2 BSP	**Z RI-R 1 1/2 R 1WD**	**85,11**
1"1/4 BSP	1"1/2 BSP	**Z RI-R 1 1/2 R 1 1/4WD**	**130,89**
2" BSP	1"1/2 BSP	**Z RI-R 1 1/2 R 2WD**	**144,47**
1"1/2 BSP	2" BSP	**Z RI-R 2 R 1 1/2WD**	**176,18**

RACORES DIN 2353

DIN 2353 Pipe fittings
Raccords à bague DIN 2353
Raccordi DIN 2353

Racor en codo regulable con tuerca y anillo

Adjustable stud elbow with nut and ring

Raccord coude orientable tube lisse équipé

Raccordo orientabile a 90° con dado e anello

TUBO PIPE	SERIE SERIES	Referencia Part n°	€	Referencia STA Part N° STA	€
6	L	Z EEL 6 CTA	26,95	Z STA EEL 6 CTA	24,75
8	L	Z EEL 8 CTA	27,41	Z STA EEL 8 CTA	23,10
12	L	Z EEL 12 CTA	33,61	Z STA EEL 12 CTA	29,69
15	L	Z EEL 15 CTA	49,49	Z STA EEL 15 CTA	43,64
22	L	Z EEL 22 CTA	92,03	Z STA EEL 22 CTA	84,46
28	L	Z EEL 28 CTA	139,36	Z STA EEL 28 CTA	155,34
35	L	Z EEL 35 CTA	179,35	Z STA EEL 35 CTA	160,43
6	S	Z EES 6 CTA	25,47	Z STA EES 6 CTA	21,20
16	S	Z EES 16 CTA	58,57	Z STA EES 16 CTA	53,57

Hasta fin de existencias / *Until end of stock* / Jusqu´à la fin du stock / *Fino ad esaurimento*

Racor en codo regulable TL Métrica

Adjustable stud elbow with o'ring

Raccord coude orientable Métrique avec o'ring

Raccordo orientabile a 90° con o'ring

TUBO PIPE	SERIE SERIES	Referencia Part n°	€	Referencia STA Part N° STA	€
6	L	Z EEL 6 TLM	26,41	Z STA EEL 6 TLM	24,62
8	L	Z EEL 8 TLM	26,87	Z STA EEL 8 TLM	26,61
10	L	Z EEL 10 TLM	33,16	Z STA EEL 10 TLM	27,27
12	L	Z EEL 12 TLM	38,05	Z STA EEL 12 TLM	34,85
15	L	Z EEL 15 TLM	49,05	Z STA EEL 15 TLM	46,61
18	L	Z EEL 18 TLM	68,79	Z STA EEL 18 TLM	65,74
22	L	Z EEL 22 TLM	93,80	Z STA EEL 22 TLM	84,25
28	L	Z EEL 28 TLM	136,57	Z STA EEL 28 TLM	128,39
35	L	Z EEL 35 TLM	192,78	Z STA EEL 35 TLM	171,03
42	L	Z EEL 42 TLM	330,84	Z STA EEL 42 TLM	296,53
6	S	Z EES 6 TLM	36,60	Z STA EES 6 TLM	34,17
8	S	Z EES 8 TLM	39,14	Z STA EES 8 TLM	33,70
10	S	Z EES 10 TLM	40,62	Z STA EES 10 TLM	39,05
12	S	Z EES 12 TLM	45,51	Z STA EES 12 TLM	43,68
14	S	Z EES 14 TLM	55,01	Z STA EES 14 TLM	50,56
16	S	Z EES 16 TLM	64,97	Z STA EES 16 TLM	63,58
20	S	Z EES 20 TLM	100,61	Z STA EES 20 TLM	93,11
25	S	Z EES 25 TLM	165,41	Z STA EES 25 TLM	145,45
30	S	Z EES 30 TLM	206,01	Z STA EES 30 TLM	197,09
38	S	Z EES 38 TLM	308,52	Z STA EES 38 TLM	287,08

Racor en T regulable TL Métrica

Adjustable stud branch TEE with o'ring

Raccord TÉ orientable Métrique avec o'ring

Raccordo orientabile a T con o'ring

TUBO PIPE	SERIE SERIES	Referencia Part n°	€	Referencia STA Part N° STA	€
6	L	Z TEL 6 TLM	33,65	Z STA TEL 6 TLM	28,85
8	L	Z TEL 8 TLM	37,38	Z STA TEL 8 TLM	31,76
10	L	Z TEL 10 TLM	41,25	Z STA TEL 10 TLM	34,64
12	L	Z TEL 12 TLM	46,60	Z STA TEL 12 TLM	40,50
15	L	Z TEL 15 TLM	80,03	Z STA TEL 15 TLM	63,06
18	L	Z TEL 18 TLM	122,12	Z STA TEL 18 TLM	98,74
22	L	Z TEL 22 TLM	142,18	Z STA TEL 22 TLM	127,77
28	L	Z TEL 28 TLM	214,60	Z STA TEL 28 TLM	183,56
35	L	Z TEL 35 TLM	386,51	Z STA TEL 35 TLM	323,56
42	L	Z TEL 42 TLM	517,22	Z STA TEL 42 TLM	401,33
6	S	Z TES 6 TLM	41,26	Z STA TES 6 TLM	32,93
8	S	Z TES 8 TLM	45,74	Z STA TES 8 TLM	38,07
10	S	Z TES 10 TLM	52,45	Z STA TES 10 TLM	44,13
12	S	Z TES 12 TLM	61,96	Z STA TES 12 TLM	53,90
14	S	Z TES 14 TLM	100,51	Z STA TES 14 TLM	90,12
16	S	Z TES 16 TLM	106,81	Z STA TES 16 TLM	101,11
20	S	Z TES 20 TLM	139,87	Z STA TES 20 TLM	127,91
25	S	Z TES 25 TLM	215,69	Z STA TES 25 TLM	180,14
30	S	Z TES 30 TLM	309,62	Z STA TES 30 TLM	262,87
38	S	Z TES 38 TLM	529,51	Z STA TES 38 TLM	393,20

Racor en L regulable TL Métrica

Adjustable stud barrel TEE with o'ring

Raccord L orientable renversé Métrique avec o'ring

Raccordo orientabile a L con o'ring

TUBO PIPE	SERIE SERIES	ROSCA THREAD	Referencia Part n°	€	Referencia STA Part N° STA	€
6	L	M12X1.5	Z LEL 6 TLM	33,10	Z STA LEL 6 TLM	27,52
8	L	M14X1.5	Z LEL 8 TLM	44,00	Z STA LEL 8 TLM	35,62
10	L	M16X1.5	Z LEL 10 TLM	47,77	Z STA LEL 10 TLM	40,57
12	L	M18X1.5	Z LEL 12 TLM	57,04	Z STA LEL 12 TLM	50,78
15	L	M22X1.5	Z LEL 15 TLM	82,63	Z STA LEL 15 TLM	70,91
18	L	M26X1.5	Z LEL 18 TLM	109,37	Z STA LEL 18 TLM	91,76
22	L	M30X2	Z LEL 22 TLM	150,04	Z STA LEL 22 TLM	135,20
28	L	M36X2	Z LEL 28 TLM	216,96	Z STA LEL 28 TLM	185,07
35	L	M45X2	Z LEL 35 TLM	395,65	Z STA LEL 35 TLM	303,14
42	L	M52X2	Z LEL 42 TLM	506,03	Z STA LEL 42 TLM	432,81
6	S	M14X1.5	Z LES 6 TLM	33,92	Z STA LES 6 TLM	26,08
8	S	M16X1.5	Z LES 8 TLM	44,20	Z STA LES 8 TLM	35,26
10	S	M18X1.5	Z LES 10 TLM	58,64	Z STA LES 10 TLM	50,13
12	S	M20X1.5	Z LES 12 TLM	58,45	Z STA LES 12 TLM	57,48
14	S	M22X1.5	Z LES 14 TLM	89,13	Z STA LES 14 TLM	74,21
16	S	M24X1.5	Z LES 16 TLM	101,45	Z STA LES 16 TLM	90,01
20	S	M30X2	Z LES 20 TLM	147,27	Z STA LES 20 TLM	122,49
25	S	M36X2	Z LES 25 TLM	228,22	Z STA LES 25 TLM	198,13
30	S	M42X2	Z LES 30 TLM	340,69	Z STA LES 30 TLM	288,11
38	S	M52X2	Z LES 38 TLM	564,50	Z STA LES 38 TLM	428,19

RACORES DIN 2353

DIN 2353 Pipe fittings
Raccords à bague DIN 2353
Raccordi DIN 2353

Racor unión TL Métrica

Straight connection with o'ring

Raccord union tournante Métrique égale

Raccordo di estremitá diritto Metrico con o'ring

TUBO PIPE	SERIE SERIES	Referencia Part n°	€
6	L	**Z ATL 6**	**28,28**
8	L	**Z ATL 8**	**29,65**
10	L	**Z ATL 10**	**28,29**
12	L	**Z ATL 12**	**34,41**
15	L	**Z ATL 15**	**47,78**
18	L	**Z ATL 18**	**62,19**
22	L	**Z ATL 22**	**66,56**
28	L	**Z ATL 28**	**102,30**
35	L	**Z ATL 35**	**159,94**
42	L	**Z ATL 42**	**213,70**
6	S	**Z ATS 6**	**39,24**
8	S	**Z ATS 8**	**34,26**
10	S	**Z ATS 10**	**33,57**
12	S	**Z ATS 12**	**43,87**
14	S	**Z ATS 14**	**54,55**
16	S	**Z ATS 16**	**55,85**
20	S	**Z ATS 20**	**73,08**
25	S	**Z ATS 25**	**101,24**
30	S	**Z ATS 30**	**168,72**
38	S	**Z ATS 38**	**226,80**

Racor recto macho BSP con junta plana - TLM

Straight stud standpipe adaptor with captive seal BSP cylindrical-metric swivel fem.

Raccord adapt.tube lisse-mâle gaz BSP avec joint plat-fem.tourn.métrique

Adattatore diritto BSP cilindrico con guarnizione ed o'ring

TUBO PIPE	SERIE SERIES	ROSCA THREAD	Referencia Part n°	€
6	L	1/8"BSP	**Z RAL 6 R 1/8TLMWD**	**30,39**
8	L	1/4"BSP	**Z RAL 8 R 1/4TLMWD**	**29,79**
10	L	1/4"BSP	**Z RAL 10 R 1/4TLMWD**	**27,36**
12	L	1/4"BSP	**Z RAL 12 R 1/4TLMWD**	**28,06**
12	L	3/8"BSP	**Z RAL 12 R 3/8TLMWD**	**29,07**
12	L	1/2"BSP	**Z RAL 12 R 1/2TLMWD**	**31,35**
15	L	1/2"BSP	**Z RAL 15 R 1/2TLMWD**	**38,05**
18	L	1/2"BSP	**Z RAL 18 R 1/2TLMWD**	**50,95**
22	L	3/4"BSP	**Z RAL 22 R 3/4TLMWD**	**54,85**
28	L	1"BSP	**Z RAL 28 R 1TLMWD**	**94,35**
35	L	1"1/4 BSP	**Z RAL 35 R 1 1/4TLMWD**	**131,30**
42	L	1"1/2 BSP	**Z RAL 42 R 1 1/2TLMWD**	**179,57**
6	S	1/4"BSP	**Z RAS 6 R 1/4TLMWD**	**33,09**
8	S	1/4"BSP	**Z RAS 8 R 1/4TLMWD**	**27,36**
10	S	3/8"BSP	**Z RAS 10 R 3/8TLMWD**	**30,56**
12	S	3/8"BSP	**Z RAS 12 R 3/8TLMWD**	**30,64**
12	S	1/2"BSP NEW	**Z RAS 12 R 1/2TLMWD**	**35,24**
14	S	1/2"BSP	**Z RAS 14 R 1/2TLMWD**	**40,48**
16	S	1/2"BSP	**Z RAS 16 R 1/2TLMWD**	**53,64**
20	S	3/4"BSP	**Z RAS 20 R 3/4TLMWD**	**56,91**
25	S	1"BSP	**Z RAS 25 R 1TLMWD**	**100,14**
30	S	1"1/4 BSP	**Z RAS 30 R 1 1/4TLMWD**	**129,70**
38	S	1"1/2 BSP	**Z RAS 38 R 1 1/2TLMWD**	**174,18**

Racor recto macho NPT - TL Metrica

Straight stud standpipe adaptor NPT- metric swivel fem.

Raccord adapteur tube lisse - mâle NPT- fem. tourn. métrique

Adattatore diritto NPT - tubo TLM

TUBO PIPE	SERIE SERIES	ROSCA THREAD	Referencia Part n°	€
6	L	1/8"NPT	**Z RAL 6 R 1/8 NPTTLM**	**29,00**
8	L	1/4"NPT	**Z RAL 8 R 1/4 NPTTLM**	**29,89**
10	L	1/4"NPT	**Z RAL 10 R 1/4 NPTTLM**	**30,80**
12	L	3/8" NPT	**Z RAL 12 R 3/8 NPTTLM**	**41,05**
15	L	1/2" NPT	**Z RAL 15 R 1/2 NPTTLM**	**31,28**
18	L	1/2"NPT	**Z RAL 18 R 1/2 NPTTLM**	**64,98**
22	L	3/4"NPT	**Z RAL 22 R 3/4 NPTTLM**	**69,76**
28	L	1"NPT	**Z RAL 28 R 1 NPTTLM**	**104,36**
35	L	1"1/4 NPT	**Z RAL 35 R 1 1/4 NPTTLM**	**136,32**
42	L	1"1/2 NPT	**Z RAL 42 R 1 1/2 NPTTLM**	**186,84**
6	S	1/4"NPT	**Z RAS 6 R 1/4 NPTTLM**	**27,43**
8	S	1/4"NPT	**Z RAS 8 R 1/4 NPTTLM**	**28,81**
10	S	3/8"NPT	**Z RAS 10 R 3/8 NPTTLM**	**33,09**
12	S	1/4" NPT	**Z RAS 12 R 1/4 NPTTLM**	**25,71**
14	S	1/2"NPT	**Z RAS 14 R 1/2 NPTTLM**	**43,37**
16	S	1/2"NPT	**Z RAS 16 R 1/2 NPTTLM**	**65,10**
20	S	3/4"NPT	**Z RAS 20 R 3/4 NPTTLM**	**91,99**
25	S	3/4"NPT	**Z RAS 25 R 3/4 NPTTLM**	**110,83**
25	S	1"NPT	**Z RAS 25 R 1 NPTTLM**	**97,34**
30	S	1"NPT	**Z RAS 30 R 1 NPTTLM**	**120,96**
30	S	1"1/4 NPT	**Z RAS 30 R 1 1/4 NPTTLM**	**152,01**
38	S	1"1/2 NPT	**Z RAS 38 R 1 1/2 NPTTLM**	**236,79**

Racor recto macho Métrico con junta plana - tubo TLM

Straight stud standpipe adaptor Metric with captive seal-metric swivel fem.

Raccord adapt.tube lisse-mâle Métrique avec joint plat-fem.tourn.métrique

Adattatore diritto Metrico cilindrico con guarnizione - tubo TLM

TUBO PIPE	SERIE SERIES	ROSCA THREAD	Referencia Part n°	€
6	L	M10X1	**Z RAL 6M10X1TLMWD**	**32,85**
8	L	M12X1.5	**Z RAL 8M12X1.5TLMWD**	**29,05**
10	L	M14X1.5	**Z RAL 10M14X1.5TLMWD**	**36,88**
12	L	M16X1.5	**Z RAL 12M16X1.5TLMWD**	**35,55**
15	L	M18X1.5	**Z RAL 15M18X1.5TLMWD**	**44,58**
18	L	M22X1.5	**Z RAL 18M22X1.5TLMWD**	**57,27**
22	L	M26X1.5	**Z RAL 22M26X1.5TLMWD**	**66,06**
28	L	M33X2	**Z RAL 28M33X2TLMWD**	**105,23**
35	L	M42X2	**Z RAL 35M42X2TLMWD**	**162,28**
42	L	M48X2	**Z RAL 42M48X2TLMWD**	**183,71**
6	S	M12X1.5	**Z RAS 6M12X1.5TLMWD**	**33,09**
8	S	M14X1.5	**Z RAS 8M14X1.5TLMWD**	**32,69**
10	S	M16X1.5	**Z RAS 10M16X1.5TLMWD**	**34,44**
12	S	M18X1.5	**Z RAS 12M18X1.5TLMWD**	**37,75**
14	S	M20X1.5	**Z RAS 14M20X1.5TLMWD**	**51,67**
16	S	M22X1.5	**Z RAS 16M22X1.5TLMWD**	**56,59**
20	S	M27X2	**Z RAS 20M27X2TLMWD**	**76,85**
25	S	M33X2	**Z RAS 25M33X2TLMWD**	**113,64**
30	S	M42X2	**Z RAS 30M42X2TLMWD**	**156,57**
38	S	M48X2	**Z RAS 38M48X2TLMWD**	**202,78**

RACORES DIN 2353

DIN 2353 Pipe fittings
Raccords à bague DIN 2353
Raccordi DIN 2353

Racor recto para soldar

Weldable straight coupling

Raccord mamelon hexagonal Métrique à souder

Raccordo diritto a saldare

TUBO PIPE	SERIE SERIES	Referencia Part n°	€	Referencia STA Part N° STA	€
6	L	Z ASL 6	11,45	Z STA ASL 6	7,56
8	L	Z ASL 8	13,12	Z STA ASL 8	9,02
10	L	Z ASL 10	16,57	Z STA ASL 10	10,67
12	L	Z ASL 12	15,32	Z STA ASL 12	11,26
15	L	Z ASL 15	25,09	Z STA ASL 15	16,74
18	L	Z ASL 18	28,77	Z STA ASL 18	20,52
22	L	Z ASL 22	40,90	Z STA ASL 22	26,65
28	L	Z ASL 28	61,85	Z STA ASL 28	37,90
35	L	Z ASL 35	100,37	Z STA ASL 35	53,22
42	L	Z ASL 42	131,04	Z STA ASL 42	75,47
6	S	Z ASS 6	27,30	Z STA ASS 6	22,23
8	S	Z ASS 8	31,41	Z STA ASS 8	25,91
10	S	Z ASS 10	37,17	Z STA ASS 10	30,27
12	S	Z ASS 12	29,16	Z STA ASS 12	21,70
14	S	Z ASS 14	57,89	Z STA ASS 14	46,90
16	S	Z ASS 16	29,02	Z STA ASS 16	21,75
20	S	Z ASS 20	47,72	Z STA ASS 20	30,69
25	S	Z ASS 25	69,27	Z STA ASS 25	34,77
30	S	Z ASS 30	91,03	Z STA ASS 30	49,47
38	S	Z ASS 38	166,28	Z STA ASS 38	106,72

Racor pasatabique para soldar

Weldable bulkhead coupling

Raccord union double passe cloison Métrique à souder

Raccordo passaparete a saldare

TUBO PIPE	SERIE SERIES	Referencia Part n°	€	Referencia STA Part N° STA	€
6	L	Z ESVL 6	23,95	Z STA ESVL 6	15,35
8	L	Z ESVL 8	27,49	Z STA ESVL 8	17,76
10	L	Z ESVL 10	30,41	Z STA ESVL 10	18,70
12	L	Z ESVL 12	33,92	Z STA ESVL 12	20,77
15	L	Z ESVL 15	45,62	Z STA ESVL 15	28,65
18	L	Z ESVL 18	65,60	Z STA ESVL 18	42,22
22	L	Z ESVL 22	88,17	Z STA ESVL 22	57,62
28	L	Z ESVL 28	109,96	Z STA ESVL 28	52,36
35	L	Z ESVL 35	162,10	Z STA ESVL 35	67,89
42	L	Z ESVL 42	208,22	Z STA ESVL 42	105,40
6	S	Z ESVS 6	32,56	Z STA ESVS 6	22,49
8	S	Z ESVS 8	36,35	Z STA ESVS 8	25,43
10	S	Z ESVS 10	52,82	Z STA ESVS 10	39,09
12	S	Z ESVS 12	49,97	Z STA ESVS 12	35,14
14	S	Z ESVS 14	64,16	Z STA ESVS 14	42,25
16	S	Z ESVS 16	70,16	Z STA ESVS 16	48,18
20	S	Z ESVS 20	105,28	Z STA ESVS 20	71,30
25	S	Z ESVS 25	135,54	Z STA ESVS 25	63,36
30	S	Z ESVS 30	169,37	Z STA ESVS 30	73,74
38	S	Z ESVS 38	253,94	Z STA ESVS 38	117,63

Boquilla para soldar

Welding nipple with o-ring

Raccord collet cône métrique à souder

Ogiva a saldare con o'ring

TUBO PIPE	SERIE SERIES	Referencia Part n°	€
15x2.5	L	Z ORIL 15	9,71
18x2.5	L	Z ORIL 18	14,28
22x2.5	L	Z ORIL 22	16,73
28x3	L	Z ORIL 28	23,23
35x4	L	Z ORIL 35	33,50
42x3	L	Z ORIL 42	58,88
6x2	L/S	Z ORIS 6	11,48
8x2	L/S	Z ORIS 8	9,06
10x2	L/S	Z ORIS 10	9,05
12x2	L/S	Z ORIS 12	9,24
14x3	S	Z ORIS 14	17,96
16x3	S	Z ORIS 16	13,20
20x3	S	Z ORIS 20	16,14
25x3.5	S	Z ORIS 25	23,34
30x5	S	Z ORIS 30	29,06
38x5	S	Z ORIS 38	41,49

RACORES DIN 2353

DIN 2353 Pipe fittings
Raccords à bague DIN 2353
Raccordi DIN 2353

Racor recto pasatabique con tuerca

Straight bulkhead coupling

Raccord droit union double passe cloison avec écrou

Raccordo passaparete

TUBO PIPE	SERIE SERIES	Referencia Part n°	€	Referencia STA Part N° STA	€
6	L	Z SVL 6	20,55	Z STA SVL 6	13,42
8	L	Z SVL 8	23,51	Z STA SVL 8	16,89
10	L	Z SVL 10	30,52	Z STA SVL 10	25,09
12	L	Z SVL 12	30,64	Z STA SVL 12	29,05
15	L	Z SVL 15	44,68	Z STA SVL 15	37,54
18	L	Z SVL 18	71,05	Z STA SVL 18	52,55
22	L	Z SVL 22	87,17	Z STA SVL 22	70,41
28	L	Z SVL 28	121,73	Z STA SVL 28	80,24
35	L	Z SVL 35	193,08	Z STA SVL 35	124,69
42	L	Z SVL 42	268,80	Z STA SVL 42	152,90
6	S	Z SVS 6	33,34	Z STA SVS 6	25,32
8	S	Z SVS 8	34,98	Z STA SVS 8	26,65
10	S	Z SVS 10	40,15	Z STA SVS 10	31,13
12	S	Z SVS 12	45,56	Z STA SVS 12	37,58
14	S	Z SVS 14	60,52	Z STA SVS 14	49,04
16	S	Z SVS 16	66,26	Z STA SVS 16	47,82
20	S	Z SVS 20	106,63	Z STA SVS 20	86,46
25	S	Z SVS 25	150,18	Z STA SVS 25	107,80
30	S	Z SVS 30	214,10	Z STA SVS 30	118,48
38	S	Z SVS 38	336,36	Z STA SVS 38	226,31

Racor en codo pasatabique con tuerca

Elbow bulkhead coupling

Raccord coude égal passe cloison

Raccordo passaparete a 90°

TUBO PIPE	SERIE SERIE	Referencia Part n°	€	Referencia STA Part N° STA	€
6	L	Z USVL 6	50,67	Z STA USVL 6	45,25
8	L	Z USVL 8	52,46	Z STA USVL 8	42,73
10	L	Z USVL 10	50,67	Z STA USVL 10	38,96
12	L	Z USVL 12	54,29	Z STA USVL 12	41,15
15	L	Z USVL 15	85,84	Z STA USVL 15	73,96
18	L	Z USVL 18	97,41	Z STA USVL 18	74,03
22	L	Z USVL 22	146,53	Z STA USVL 22	115,98
28	L	Z USVL 28	286,33	Z STA USVL 28	228,73
35	L	Z USVL 35	513,30	Z STA USVL 35	419,08
42	L	Z USVL 42	661,90	Z STA USVL 42	546,01
6	S	Z USVS 6	69,49	Z STA USVS 6	59,42
8	S	Z USVS 8	59,92	Z STA USVS 8	53,81
10	S	Z USVS 10	63,19	Z STA USVS 10	49,46
12	S	Z USVS 12	70,34	Z STA USVS 12	55,51
14	S	Z USVS 14	101,99	Z STA USVS 14	80,09
16	S	Z USVS 16	103,60	Z STA USVS 16	79,48
20	S	Z USVS 20	180,34	Z STA USVS 20	146,36
25	S	Z USVS 25	309,95	Z STA USVS 25	237,77
30	S	Z USVS 30	432,25	Z STA USVS 30	336,63

Tuerca pasatabique Métrica

Metric nut bulkhead

Écrou Métrique passe cloison

Dado passaparete Metrico

TUBO PIPE	ROSCA THREAD	Referencia Part n°	€
6L	M12x1.5	KZTPM12	2,74
8L / 6S	M14x1.5	KZTPM14	2,43
10L / 8S	M16x1.5	KZTPM16	3,13
12L / 10S	M18x1.5	KZTPM18	4,21
12S	M20x1.5	KZTPM20	5,06
15L / 14S	M22x1.5	KZTPM22	6,25
16S	M24x1.5	KZTPM24	7,53
18L	M26x1.5	KZTPM26	11,01
22L / 20S	M30x2	KZTPM30	14,35
28L / 25S	M36x2	KZTPM36	21,18
30S	M42x2	KZTPM42	27,60
35L	M45x2	KZTPM45	28,04
42L / 38S	M52x2	KZTPM52	38,50

RACORES DIN 2353

DIN 2353 Pipe fittings
Raccords à bague DIN 2353
Raccordi DIN 2353

Racor recto hembra rosca BSP

Female stud coupling

Raccord union simple femelle gaz

Raccordo diritto femmina BSP

TUBO PIPE	SERIE SERIES	ROSCA THREAD	Referencia Part n°	€	Referencia STA Part N° STA	€
6	L	1/8" BSP	Z GAIL 6 R 1/8	14,69	Z STA GAIL 6 R 1/8	12,10
6	L	1/4" BSP	Z GAIL 6 R 1/4	15,49	Z STA GAIL 6 R 1/4	13,45
8	L	1/4" BSP	Z GAIL 8 R 1/4	18,48	Z STA GAIL 8 R 1/4	15,10
10	L	1/4" BSP	Z GAIL 10 R 1/4	17,49	Z STA GAIL 10 R 1/4	14,32
12	L	1/2" BSP	Z GAIL 12 R 1/2	24,89	Z STA GAIL 12 R 1/2	20,39
12	L	3/8" BSP	Z GAIL 12 R 3/8	25,00	Z STA GAIL 12 R 3/8	20,89
15	L	1/2" BSP	Z GAIL 15 R 1/2	30,71	Z STA GAIL 15 R 1/2	22,30
18	L	1/2" BSP	Z GAIL 18 R 1/2	36,78	Z STA GAIL 18 R 1/2	25,05
22	L	3/4" BSP	Z GAIL 22 R 3/4	45,33	Z STA GAIL 22 R 3/4	32,88
28	L	1" BSP	Z GAIL 28 R 1	72,90	Z STA GAIL 28 R 1	52,91
35	L	1"1/4 BSP	Z GAIL 35 R 1 1/4	151,96	Z STA GAIL 35 R 1 1/4	104,81
42	L	1"1/2 BSP	Z GAIL 42 R 1 1/2	189,12	Z STA GAIL 42 R 1 1/2	131,13
6	S	1/4" BSP	Z GAIS 6 R 1/4	20,94	Z STA GAIS 6 R 1/4	16,37
8	S	1/4" BSP	Z GAIS 8 R 1/4	21,49	Z STA GAIS 8 R 1/4	16,05
10	S	3/8" BSP	Z GAIS 10 R 3/8	24,44	Z STA GAIS 10 R 3/8	19,42
12	S	3/8" BSP	Z GAIS 12 R 3/8	29,86	Z STA GAIS 12 R 3/8	23,21
14	S	3/8" BSP	Z GAIS 14 R 3/8 *	38,83	---	*
14	S	1/2" BSP	Z GAIS 14 R 1/2	38,02	Z STA GAIS 14 R 1/2	29,24
16	S	1/2" BSP	Z GAIS 16 R 1/2	35,36	Z STA GAIS 16 R 1/2	24,43
20	S	3/4" BSP	Z GAIS 20 R 3/4	63,16	Z STA GAIS 20 R 3/4	46,12
25	S	1" BSP	Z GAIS 25 R 1	84,52	Z STA GAIS 25 R 1	48,14
30	S	1"1/4 BSP	Z GAIS 30 R 1 1/4	140,47	Z STA GAIS 30 R 1 1/4	92,62
38	S	1"1/2 BSP	Z GAIS 38 R 1 1/2	172,23	Z STA GAIS 38 R 1 1/2	113,97

***Hasta fin de existencias** / *Until end of stock* / Jusqu´à la fin du stock / *Fino ad esaurimento*

Racor para manómetro BSP

Gauge coupling BSP cylindrical

Raccord union pour manomètre gaz

Raccordo per manometro BSP

TUBO PIPE	SERIE SERIES	ROSCA THREAD	Referencia Part n°	€
6	L	1/4" BSP	Z MAVL 6 R 1/4	21,28
8	L	1/4" BSP	Z MAVL 8 R 1/4	21,28
10	L	1/4" BSP	Z MAVL 10 R 1/4	25,41
12	L	1/4" BSP	Z MAVL 12 R 1/4	25,41
6	S	1/2" BSP	Z MAVS 6 R 1/2	32,70
8	S	1/2" BSP	Z MAVS 8 R 1/2	31,74
10	S	1/2" BSP	Z MAVS 10 R 1/2	37,57
12	S	1/2" BSP	Z MAVS 12 R 1/2	32,70

Racor recto hembra rosca Métrica

Female stud coupling Metric Cylndrical

Raccord union simple femelle Métrique

Raccordo diritto femmina Metrico

TUBO PIPE	SERIE SERIES	ROSCA THREAD	Referencia Part n°	€
6	L	M10X1	Z GAIL 6 M 10X1	19,05
8	L	M12X1.5	Z GAIL 8 M 12X1.5	23,65
10	L	M14X1.5	Z GAIL 10 M 14X1.5	26,22
12	L	M16X1.5	Z GAIL 12 M 16X1.5	31,28
15	L	M18X1.5	Z GAIL 15 M 18X1.5	44,31
18	L	M22X1.5	Z GAIL 18 M 22X1.5	52,67
22	L	M26X1.5	Z GAIL 22 M 26X1.5	57,96
28	L	M33X2	Z GAIL 28 M 33X2	87,80
35	L	M42X2	Z GAIL 35 M 42X2	159,39
42	L	M48X2	Z GAIL 42 M 48X2	211,82
6	S	M12X1.5	Z GAIS 6 M 12X1.5	27,01
8	S	M14X1.5	Z GAIS 8 M 14X1.5	32,69
10	S	M16X1.5	Z GAIS 10 M 16X1.5	31,48
12	S	M18X1.5	Z GAIS 12 M 18X1.5	39,18
14	S	M20X1.5	Z GAIS 14 M 20X1.5	48,63
16	S	M22X1.5	Z GAIS 16 M 22X1.5	52,67
20	S	M27X2	Z GAIS 20 M 27X2	74,83
25	S	M33X2	Z GAIS 25 M 33X2	107,38
30	S	M42X2	Z GAIS 30 M 42X2	260,11
38	S	M48X2	Z GAIS 38 M 48X2	353,16

Arandela para manómetros

Seal for gauge coupling

Raccord bague pour manomètres

Guarnizione per manometro

ROSCA THREAD	Referencia Part n°	€
1/4" BSP	Z AM 6	5,95
1/2" BSP	Z AM 12	6,89

***Consultar** / On request/ **Sur demande** / Su richiesta

RACORES DIN 2353

DIN 2353 Pipe fittings
Raccords à bague DIN 2353
Raccordi DIN 2353

Racor en codo orientable sin estrangulación rosca BSP

Banjo coupling with captive seal and o'ring BSP cylindrical

Raccord équerre orientable articulée sans étranglement gaz

Raccordo orientabile 90° ad occhio BSP con guarnizione

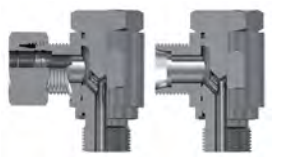

TUBO PIPE	SERIE SERIES	ROSCA THREAD	Referencia Part n°	€	Referencia STA Part N° STA	€
6	L	1/8" BSP	**Z WSVL 6 R 1/8**	**78,96**	**Z STA WSVL 6 R 1/8**	**74,54**
6	L	1/4" BSP	**Z WSVL 6 R 1/4**	**105,37**	**Z STA WSVL 6 R 1/4**	**101,03**
8	L	1/4" BSP	**Z WSVL 8 R 1/4**	**83,00**	**Z STA WSVL 8 R 1/4**	**79,67**
10	L	1/4" BSP	**Z WSVL 10 R 1/4**	**79,05**	**Z STA WSVL 10 R 1/4**	**75,72**
12	L	3/8" BSP	**Z WSVL 12 R 3/8**	**94,94**	**Z STA WSVL 12 R 3/8**	**91,10**
15	L	1/2" BSP	**Z WSVL 15 R 1/2**	**130,58**	**Z STA WSVL 15 R 1/2**	**125,35**
18	L	1/2" BSP	**Z WSVL 18 R 1/2**	**168,04**	**Z STA WSVL 18 R 1/2**	**160,10**
22	L	3/4" BSP	**Z WSVL 22 R 3/4**	**343,11**	**Z STA WSVL 22 R 3/4**	**327,79**
28	L	1" BSP	**Z WSVL 28 R 1**	**573,43**	**Z STA WSVL 28 R 1**	**544,60**
35	L	1"1/4 BSP	**Z WSVL 35 R 1 1/4**	**748,53**	**Z STA WSVL 35 R 1 1/4**	**701,38**
42	L	1"1/2 BSP	**Z WSVL 42 R 1 1/2**	**1.035,01**	**Z STA WSVL 42 R 1 1/2**	**977,02**
6	S	1/4" BSP	**Z WSVS 6 R 1/4**	**85,04**	**Z STA WSVS 6 R 1/4**	**80,67**
8	S	1/4" BSP	**Z WSVS 8 R 1/4**	**93,13**	**Z STA WSVS 8 R 1/4**	**88,38**
10	S	3/8" BSP	**Z WSVS 10 R 3/8**	**105,28**	**Z STA WSVS 10 R 3/8**	**101,05**
12	S	3/8" BSP	**Z WSVS 12 R 3/8**	**118,44**	**Z STA WSVS 12 R 3/8**	**114,04**
14	S	1/2" BSP	**Z WSVS 14 R 1/2**	**185,06**	**Z STA WSVS 14 R 1/2**	**174,07**
16	S	1/2" BSP	**Z WSVS 16 R 1/2**	**174,01**	**Z STA WSVS 16 R 1/2**	**167,24**
20	S	3/4" BSP	**Z WSVS 20 R 3/4**	**347,66**	**Z STA WSVS 20 R 3/4**	**330,63**
25	S	1" BSP	**Z WSVS 25 R 1**	**500,48**	**Z STA WSVS 25 R 1**	**464,36**
30	S	1"1/4 BSP	**Z WSVS 30 R 1 1/4**	**893,41**	**Z STA WSVS 30 R 1 1/4**	**845,56**
38	S	1"1/2 BSP	**Z WSVS 38 R 1 1/2**	**1.248,81**	**Z STA WSVS 38 R 1 1/2**	**1.180,61**

Racor en codo orientable sin estrangulación rosca Métrica

Banjo coupling with captive seal and o'ring Metric cylindrical

Raccord équerre orientable articulée sans étranglement Métrique

Raccordo orientabile 90° ad occhio Metrico con guarnizione

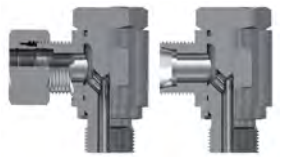

TUBO PIPE	SERIE SERIES	ROSCA THREAD	Referencia Part n°	€	Referencia STA Part N° STA	€
6	L	M10X1	**Z WSVL 6 M 10X1**	**83,00**	**Z STA WSVL 6 M 10X1**	**80,15**
8	L	M12X1.5	**Z WSVL 8 M 12X1,5**	**87,06**	**Z STA WSVL 8 M 12X1,5**	**83,98**
10	L	M14X1.5	**Z WSVL 10 M 14X1,5**	**125,62**	**Z STA WSVL 10 M 14X1,5**	**119,73**
12	L	M16X1.5	**Z WSVL 12 M 16X1,5**	**135,08**	**Z STA WSVL 12 M 16X1,5**	**128,47**
15	L	M18X1.5	**Z WSVL 15 M 18X1,5**	**181,01**	**Z STA WSVL 15 M 18X1,5**	**172,48**
18	L	M22X1.5	**Z WSVL 18 M 22X1,5**	**221,53**	**Z STA WSVL 18 M 22X1,5**	**209,80**
22	L	M26X1.5	**Z WSVL 22 M 26X1,5**	*	**Z STA WSVL 22 M 26X1,5**	*
28	L	M33X2	**Z WSVL 28 M 33X2**	*	**Z STA WSVL 28 M 33X2**	*
35	L	M42X2	**Z WSVL 35 M 42X2**	*	**Z STA WSVL 35 M 42X2**	*
42	L	M48X2	**Z WSVL 42 M 48X2**	*	**Z STA WSVL 42 M 48X2**	*
6	S	M12X1.5	**Z WSVS 6 M 12X1,5**	**118,87**	**Z STA WSVS 6 M 12X1,5**	**113,79**
8	S	M14X1.5	**Z WSVS 8 M 14X1,5**	**126,97**	**Z STA WSVS 8 M 14X1,5**	**121,47**
10	S	M16X1.5	**Z WSVS 10 M 16X1,5**	**148,59**	**Z STA WSVS 10 M 16X1,5**	**141,69**
12	S	M18X1.5	**Z WSVS 12 M 18X1,5**	**164,79**	**Z STA WSVS 12 M 18X1,5**	**157,34**
14	S	M22X1.5	**Z WSVS 14 M 20X1,5**	**143,74**	**Z STA WSVS 14 M 20X1,5**	**132,75**
16	S	M27X2	**Z WSVS 16 M 22X1,5**	**245,85**	**Z STA WSVS 16 M 22X1,5**	**233,75**
20	S	M33X2	**Z WSVS 20 M 27X2**	**357,96**	**Z STA WSVS 20 M 27X2**	**340,93**
30	S	M42X2	**Z WSVS 30 M 42X2**	**677,04**	**Z STA WSVS 30 M 42X2**	**629,19**
38	S	M48x2	**Z WSVS 38 M 48X2**	*	**Z STA WSVS 38 M 48X2**	*

***Consultar** / On request**/ Sur demande** / Su richiesta

RACORES DIN 2353

DIN 2353 Pipe fittings
Raccords à bague DIN 2353
Raccordi DIN 2353

Tapón de cierre para tubo con junta tórica

Blanking plug with o'ring

Raccord bouchon de fermeture avec o'ring

Tappo di chiusura con o'ring

TUBO PIPE	SERIE SERIES	Referencia Part n°	€
6	L/S	Z BUTZEN L 6	6,43
8	L/S	Z BUTZEN L 8	5,83
10	L/S	Z BUTZEN L 10	6,01
12	L/S	Z BUTZEN L 12	7,19
15	L	Z BUTZEN L 15	8,18
18	L	Z BUTZEN L 18	10,35
22	L	Z BUTZEN L 22	14,25
28	L	Z BUTZEN L 28	21,73
35	L	Z BUTZEN L 35	37,25
42	L	Z BUTZEN L 42	51,23
14	S	Z BUTZEN S 14	10,87
16	S	Z BUTZEN S 16	10,23
20	S	Z BUTZEN S 20	22,76
25	S	Z BUTZEN S 25	18,11
30	S	Z BUTZEN S 30	29,91
38	S	Z BUTZEN S 38	49,05

Tapón de cierre Allen rosca BSP con junta

Blanking plug with captive seal BSP cylindrical

Raccord bouchon Allen gaz avec joint plat

Tappo cilindrico BSP esagono incassato con guarnizione

ROSCA THREAD	Referencia Part n°	€
1/8" BSP	Z STOPFEN 1/8	6,68
1/4" BSP	Z STOPFEN 1/4	7,41
3/8" BSP	Z STOPFEN 3/8	8,57
1/2" BSP	Z STOPFEN 1/2	11,08
3/4" BSP	Z STOPFEN 3/4	15,61
1" BSP	Z STOPFEN 1	24,38
1"1/4 BSP	Z STOPFEN 1 1/4	44,50
1"1/2 BSP	Z STOPFEN 1 1/2	50,08

Tapón de cierre Allen rosca Métrica con junta

Blanking plug with captive seal Metric cylindrical

Raccord bouchon Allen Métrique avec joint plat

Tappo cilindrico Metrico esagono incassato con guarnizione

ROSCA THREAD	Referencia Part n°	€
M10X1	Z STOPFEN M 10X1	7,46
M12X1.5	Z STOPFEN M 12X1,5	8,35
M14X1.5	Z STOPFEN M 14X1,5	8,00
M16X1.5	Z STOPFEN M 16X1,5	9,42
M18X1.5	Z STOPFEN M 18X1,5	10,67
M20X1.5	Z STOPFEN M 20X1,5	16,91
M22X1.5	Z STOPFEN M 22X1,5	19,18
M26X1.5	Z STOPFEN M 26X1,5	31,08
M27X2	Z STOPFEN M 27X2	27,83
M33X2	Z STOPFEN M 33X2	38,22
M42X2	Z STOPFEN M 42X2	45,42
M48X2	Z STOPFEN M 48X2	79,68

Juntas tóricas FKM verde

Green FKM o-ring

Joint torique en FKM vert

Guarnizioni o'Rings FKM verde

TUBO PIPE	Referencia Part n°	€
6	JVT06	0,83
8	JVT08	0,90
10	JVT10	0,97
12	JVT12	1,02
14	JVT14	1,11
15-16	JVT15	1,09
18	JVT18	1,29
20	JVT20	1,29
22	JVT22	1,38
25	JVT25	1,43
28	JVT28	1,50
30	JVT30	1,60
35	JVT35	2,22
38	JVT38	2,34
42	JVT42	2,54

Juntas planas FKM verde

Green FKM captive seal

Joint plat en FKM vert

Guarnizioni piatte FKM verde

ROSCA THREAD	Referencia Part n°	€
1/8" BSP - M10x1	JVBSP02	3,19
M12x1.5	JVM12	3,19
1/4" BSP - M14x1.5	JVBSP04	3,13
M16x1.5	JVM16	3,19
3/8" BSP	JVBSP06	3,19
M18x1.5	JVM18	3,33
M20x1.5	JVM20	3,33
1/2" BSP	JVBSP08	3,34
M22x1.5	JVM22	3,41
3/4" BSP - M26x1.5	JVBSP12	3,40
1" BSP - M33x2	JVBSP16	3,54
1"1/4 BSP - M42x2	JVBSP20	5,42
1"1/2 BSP - M48x2	JVBSP24	5,83
2" BSP	JVBSP32	20,15

RACORES DIN 2353

DIN 2353 Pipe fittings
Raccords à bague DIN 2353
Raccordi DIN 2353

Vomo

Tool for manual pre-assembly

Outil pour pre-montage

Utensili di premontaggio

TUBO PIPE	SERIE SERIES	ROSCA THREAD	Referencia Part n°	€
6	L	12x1.5	**Z VOMO L 6**	*
8	L	14x1.5	**Z VOMO L 8**	*
10	L	16x1.5	**Z VOMO L 10**	*
12	L	18x1.5	**Z VOMO L 12**	*
15	L	22x1.5	**Z VOMO L 15**	*
18	L	26x1.5	**Z VOMO L 18**	*
22	L	30x2.0	**Z VOMO L 22**	*
28	L	36x2.0	**Z VOMO L 28**	*
35	L	45x2.0	**Z VOMO L 35**	*
42	L	52x2.0	**Z VOMO L 42**	*
6	S	14x1.5	**Z VOMO S 6**	*
8	S	16x1.5	**Z VOMO S 8**	*
10	S	18x1.5	**Z VOMO S 10**	*
12	S	20x1.5	**Z VOMO S 12**	*
14	S	22x1.5	**Z VOMO S 14**	*
16	S	24x1.5	**Z VOMO S 16**	*
20	S	30x2.0	**Z VOMO S 20**	*
25	S	36x2.0	**Z VOMO S 25**	*
30	S	42x2.0	**Z VOMO S 30**	*

Material Acero Templado / *Made of Hardened tool-steel* / Matériel Acier Trempé / *Materiale acciaio temprato*

Grasa

Grease

Graisse

Lubrificante

PESO (gr) WEIGHT (gr)	Referencia Part n°	€
145	**GR ASW120**	**71,79**

***Consultar** / On request**/ Sur demande** / Su richiesta

RACORES DIN 2353

DIN 2353 Pipe fittings
Raccords à bague DIN 2353
Raccordi DIN 2353

Válvula antirretorno rosca BSP-tubo

Non-return valve flow from male stud end BSP cylindrical

Clapet anti-rétour unidirectionnel à gauche mâle-tube

Valvola di ritegno a sinistra

TUBO PIPE	SERIE SERIES	ROSCA THREAD	Referencia Part n°	€
6	L	1/8" BSP	**Z RHVL 6 R 1/8**	*
8	L	1/4" BSP	**Z RHVL 8 R 1/4**	*
10	L	1/4" BSP	**Z RHVL 10 R 1/4**	*
12	L	3/8" BSP	**Z RHVL 12 R 3/8**	*
15	L	1/2" BSP	**Z RHVL 15 R 1/2**	*
18	L	1/2" BSP	**Z RHVL 18 R 1/2**	*
22	L	3/4" BSP	**Z RHVL 22 R 3/4**	*
28	L	1" BSP	**Z RHVL 28 R 1**	*
35	L	1"1/4 BSP	**Z RHVL 35 R 1 1/4**	*
42	L	1"1/2 BSP	**Z RHVL 42 R 1 1/2**	*
6	S	1/4" BSP	**Z RHVS 6 R 1/4**	*
8	S	1/4" BSP	**Z RHVS 8 R 1/4**	*
10	S	3//8" BSP	**Z RHVS 10 R 3/8**	*
12	S	3/8" BSP	**Z RHVS 12 R 3/8**	*
14	S	1/2" BSP	**Z RHVS 14 R 1/2**	*
16	S	1/2" BSP	**Z RHVS 16 R 1/2**	*
20	S	3/4" BSP	**Z RHVS 20 R 3/4**	*
25	S	1" BSP	**Z RHVS 25 R 1**	*
30	S	1"1/4 BSP	**Z RHVS 30 R 1 1/4**	*
38	S	1"1/2 BSP	**Z RHVS 38 R 1 1/2**	*

Taraje 1 bar. Para otras presiones de tarado estandard, consultar. */ Setting 1 bar. For other standard spring pressures, consult us.* / Tarage 1 bar. Pour d'autres pressions ressort standard, consultez-nous. */ Per altre pressioni di taratura standard, consultare.*

Válvula antirretorno tubo-tubo

Non-return valve tube-tube

Clapet anti-rétour bidirectionnel tube-tube

Valvola di ritegno tubo-tubo

TUBO PIPE	SERIE SERIES	Referencia Part n°	€	Referencia STA Part N° STA	€
6	L	**Z RHDL 6**	**44,00**	**Z STA RHDL 6**	**35,40**
8	L	**Z RHDL 8**	**62,07**	**Z STA RHDL 8**	**52,34**
10	L	**Z RHDL 10**	**55,34**	**Z STA RHDL 10**	**43,62**
12	L	**Z RHDL 12**	**66,00**	**Z STA RHDL 12**	**52,85**
15	L	**Z RHDL 15**	**77,15**	**Z STA RHDL 15**	**60,18**
18	L	**Z RHDL 18**	**108,53**	**Z STA RHDL 18**	**85,15**
22	L	**Z RHDL 22**	**145,79**	**Z STA RHDL 22**	**115,24**
28	L	**Z RHDL 28**	**250,79**	**Z STA RHDL 28**	**193,19**
35	L	**Z RHDL 35**	**577,04**	**Z STA RHDL 35**	**482,83**
42	L	**Z RHDL 42**	**748,53**	**Z STA RHDL 42**	**632,64**
6	S	**Z RHDS 6**	**44,31**	**Z STA RHDS 6**	**34,24**
8	S	**Z RHDS 8**	**47,03**	**Z STA RHDS 8**	**36,11**
10	S	**Z RHDS 10**	**57,49**	**Z STA RHDS 10**	**43,76**
12	S	**Z RHDS 12**	**67,02**	**Z STA RHDS 12**	**52,19**
14	S	**Z RHDS 14**	**84,06**	**Z STA RHDS 14**	**62,16**
16	S	**Z RHDS 16**	**98,52**	**Z STA RHDS 16**	**74,39**
20	S	**Z RHDS 20**	**130,28**	**Z STA RHDS 20**	**96,29**
25	S	**Z RHDS 25**	**211,46**	**Z STA RHDS 25**	**139,28**
30	S	**Z RHDS 30**	**344,18**	**Z STA RHDS 30**	**248,56**
38	S	**Z RHDS 38**	**737,54**	**Z STA RHDS 38**	**601,24**

Taraje 1 bar. Para otras presiones de tarado estandard, consultar. */ Setting 1 bar. For other standard spring pressures, consult us.* / Tarage 1 bar. Pour d'autres pressions ressort standard, consultez-nous. */ Per altre pressioni di taratura standard, consultare.*

Válvula antirretorno tubo-rosca BSP

Non-return valve flow towards male stud end BSP cylidrical

Clapet anti-rétour unidirectionnel à droite tube-mâle

Valvola di ritegno a destra

TUBO PIPE	SERIE SERIES	ROSCA THREAD	Referencia Part n°	€
6	L	1/8" BSP	**Z RHZL 6 R 1/8**	*
8	L	1/4" BSP	**Z RHZL 8 R 1/4**	*
10	L	1/4" BSP	**Z RHZL 10 R 1/4**	*
12	L	3/8" BSP	**Z RHZL 12 R 3/8**	*
15	L	1/2" BSP	**Z RHZL 15 R 1/2**	*
18	L	1/2" BSP	**Z RHZL 18 R 1/2**	*
22	L	3/4" BSP	**Z RHZL 22 R 3/4**	*
28	L	1" BSP	**Z RHZL 28 R 1**	*
35	L	1"1/4 BSP	**Z RHZL 35 R 1 1/4**	*
42	L	1"1/2 BSP	**Z RHZL 42 R 1 1/2**	*
6	S	1/4" BSP	**Z RHZS 6 R 1/4**	*
8	S	1/4" BSP	**Z RHZS 8 R 1/4**	*
10	S	3/8" BSP	**Z RHZS 10 R 3/8**	*
12	S	3/8" BSP	**Z RHZS 12 R 3/8**	*
14	S	1/2" BSP	**Z RHZS 14 R 1/2**	*
16	S	1/2" BSP	**Z RHZS 16 R 1/2**	*
20	S	3/4" BSP	**Z RHZS 20 R 3/4**	*
25	S	1" BSP	**Z RHZS 25 R 1**	*
30	S	1"1/4 BSP	**Z RHZS 30 R 1 1/4**	*
38	S	1"1/2 BSP	**Z RHZS 38 R 1 1/2**	*

Taraje 1 bar. Para otras presiones de tarado estandard, consultar. */ Setting 1 bar. For other standard spring pressures, consult us.* / Tarage 1 bar. Pour d'autres pressions ressort standard, consultez-nous. */ Per altre pressioni di taratura standard, consultare.*

Incorporamos válvulas antirretorno sin tuerca ni anillo

Non-return valve only body

***Consultar** / On request / **Sur demande** / Su richiesta

RACORES JIC 37°

Flare fittings JIC 37°
Adapteurs JIC 37°
Raccordi JIC 37°

Tuercas JIC 37°

Nut JIC 37°

Écrou JIC 37°

Dado JIC

TUBO PIPE		ROSCA THREAD	Referencia Part n°	€
6	1/4"	7/16" 20h UNF	**ZS11006**	**5,58**
8	5/16"	1/2" 20h UNF	**ZS11008**	**4,71**
10	3/8"	9/16" 18h UNF	**ZS11010**	**5,25**
12	1/2"	3/4" 16h UNF	**ZS11012**	**5,37**
14-15-16	5/8"	7/8" 14h UNF	**ZS11016**	**6,80**
18-20	-	1"1/16 12h UN	**ZS11020**	**11,67**
-	3/4"	1"1/16 12h UNF	**ZS11020W**	**19,43**
25	1"	1"5/16 12h UN	**ZS11025**	**20,35**
30-32	1 1/4"	1"5/8 12h UN	**ZS11032**	**27,71**
38	1 1/2"	1"7/8 12h UN	**ZS11038**	**51,29**

Ferulas JIC 37° (tubo Métrico)

Metric tube slevees JIC 37°

Ferrules JIC 37° pour tube Métrique

Bussola JIC 37° per tubo Metrico

TUBO PIPE	Referencia Part n°	€
6	**ZS12006**	**2,86**
8	**ZS12008**	**3,09**
10	**ZS12010**	**3,80**
12	**ZS12012**	**3,90**
14	**ZS12014**	**6,59**
15	**ZS12015**	**6,59**
16	**ZS12016**	**6,33**
18	**ZS12018**	**8,04**
20	**ZS12020**	**7,73**
25	**ZS12025**	**12,18**
30	**ZS12030**	**15,72**
32	**ZS12032**	**17,12**
38	**ZS12038**	**26,75**

Ferulas JIC 37° (tubo Gas)

Tube sleeves Gas JIC 37°

Ferrules JIC 37° pour tube Gaz

Bussola JIC 37° per tubo gas

TUBO PIPE	Referencia Part n°	€
1/4"	**ZS12104**	**3,66**
5/16"	**ZS12105**	**4,02**
3/8"	**ZS12106**	**4,76**
1/2"	**ZS12108**	**5,52**
5/8"	**ZS12110**	**5,63**
3/4"	**ZS12112**	**8,04**
1"	**ZS12116**	**18,83**
1"1/4	**ZS12120**	**25,50**
1"1/2	**ZS12124**	**34,16**

Tapón macho JIC 37°

Plug male JIC 37°

Bouchon mâle JIC 37°

Tappo maschio JIC 37°

TUBO PIPE		ROSCA THREAD	Referencia Part n°	€
6	1/4"	7/16" 20h UNF	**ZS14006**	**7,85**
8	5/16"	1/2" 20h UNF	**ZS14008**	**7,93**
10	3/8"	9/16" 18h UNF	**ZS14010**	**12,57**
12	1/2"	3/4" 16h UNF	**ZS14012**	**14,02**
14-15-16	5/8"	7/8" 14h UNF	**ZS14016**	**15,96**
18-20	3/4"	1"1/16 12h UN	**ZS14020**	**23,16**
25	1"	1"5/16 12h UN	**ZS14025**	**28,99**
30-32	1 1/4"	1"5/8 12h UN	**ZS14032**	**48,24**
38	1 1/2"	1"7/8 12h UN	**ZS14038**	**71,90**

Tapón hembra giratoria JIC 37°

Cap JIC 37°

Bouchon femelle JIC 37°

Tappo femmina girevole JIC 37°

TUBO PIPE		ROSCA THREAD	Referencia Part n°	€
6	1/4"	7/16"-20h UNF	**ZS13006**	**15,47**
8	5/16"	1/2"-20h UNF	**ZS13008**	**15,95**
10	3/8"	9/16"-18h UNF	**ZS13010**	**14,87**
12	1/2"	3/4"-16h UNF	**ZS13012**	**18,61**
14-15-16	5/8"	7/8"-14h UNF	**ZS13016**	**17,62**
18-20	3/4"	1"1/16-12h UN	**ZS13020**	**25,31**
25	1"	1"5/16-12h UN	**ZS13025**	**44,91**
30-32	1 1/4"	1"5/8-12h UN	**ZS13032**	**62,87**
38	1 1/2"	1"7/8-12h UN	**ZS13038**	**105,84**

RACORES JIC 37°

Flare fittings JIC 37°
Adapteurs JIC 37°
Raccordi JIC 37°

Racor macho-macho JIC 37°

Straight union JIC 37°

Adapteur droit mâle JIC 37°

Niples di giunzione JIC

TUBO PIPE		ROSCA THREAD	Referencia Part n°	€
6	1/4"	7/16" 20h UNF	**ZS26006**	**13,25**
8	5/16"	1/2" 20h UNF	**ZS26008**	**15,01**
10	3/8"	9/16" 18h UNF	**ZS26010**	**15,21**
12	1/2"	3/4" 16h UNF	**ZS26012**	**17,26**
14-15-16	5/8"	7/8" 14h UNF	**ZS26016**	**22,93**
18-20	3/4"	1"1/16 12h UN	**ZS26020**	**24,59**
25	1"	1"5/16 12h UN	**ZS26025**	**36,52**
30-32	1" 1/4	1"5/8 12h UN	**ZS26032**	**57,42**
38	1" 1/2	1"7/8 12h UN	**ZS26038**	**74,39**
50	2"	2" 1/2 12h UN	**ZS26050**	**135,02**

Racor reducción macho-macho JIC 37°

Reducer adaptor male JIC 37°

Adapteur réduction mâle JIC 37°

Nipples di riduzione maschio-maschio JIC 37°

TUBO PIPE		ROSCA THREAD		Referencia Part n°	€
8 5/16"	6 1/4"	1/2"20h UNF	7/16"20h UNF	**ZS2600806**	**15,02**
10 5/16"	6 1/4"	9/16"20h UNF	7/16"20h UNF	**ZS2601006**	**19,59**
10 3/8"	8 5/16"	9/16"20h UNF	1/2"20h UNF	**ZS2601008**	**18,26**
12 1/2"	10 3/8"	3/4"20h UNF	9/16"20h UNF	**ZS2601210**	**24,63**
14-15-16 5/8"	12 1/2"	7/8"20h UNF	3/4"20h UNF	**ZS2601612**	**25,36**
18-20 3/4"	14-15-16 5/8"	1"1/16 20h UNF	7/8"20h UNF	**ZS2602016**	**29,50**
25 1"	18-20 3/4"	1"5/16 20h UNF	1"1/16 20h UNF	**ZS2602520**	**40,13**
30-32 1"1/4	25 1"	1"5/8 20h UNF	1"5/16 20h UNF	**ZS2603225**	**57,42**
38 1"1/2	30-32 1"1/4	1"7/8 20h UNF	1"5/8 20h UNF	**ZS2603832**	**86,26**

Racor pasatabiques JIC 37°

Straight bulkhead fitting JIC 37°

Union passe cloison droite mâle JIC 37° équipé

Niples passaparete JIC

TUBO PIPE		ROSCA THREAD	Referencia Part n°	€
6	1/4"	7/16" 20h UNF	**ZS25006**	**22,67**
8	5/16"	1/2" 20h UNF	**ZS25008**	**24,63**
10	3/8"	9/16" 18h UNF	**ZS25010**	**25,92**
12	1/2"	3/4" 16h UNF	**ZS25012**	**29,34**
14-15-16	5/8"	7/8" 14h UNF	**ZS25016**	**36,70**
18-20	3/4"	1"1/16 12h UN	**ZS25020**	**52,89**
25	1"	1"5/16 12h UN	**ZS25025**	**70,36**
30-32	1" 1/4	1"5/8 12h UN	**ZS25032**	**120,18**
38	1" 1/2	1"7/8 12h UN	**ZS25038**	**138,99**

Racor macho-macho JIC 37° con junta

Straight union JIC 37° with o'ring

Adapteur droit mâle JIC 37° avec o'ring

Niples di giunzione JIC con o'ring

TUBO PIPE		ROSCA THREAD	Referencia Part n°	€
6	1/4"	7/16" 20h UNF	**ZS26006OR**	**20,44**
8	5/16"	1/2" 20h UNF	**ZS26008OR**	**20,28**
10	3/8"	9/16" 18h UNF	**ZS26010OR**	**20,29**
12	1/2"	3/4" 16h UNF	**ZS26012OR**	**24,65**
14-15-16	5/8"	7/8" 14h UNF	**ZS26016OR**	**28,69**
18-20	3/4"	1"1/16 12h UN	**ZS26020OR**	**44,28**
25	1"	1"5/16 12h UN	**ZS26025OR**	**54,12**
30-32	1" 1/4	1"5/8 12h UN	**ZS26032OR**	**84,94**
38	1" 1/2	1"7/8 12h UN	**ZS26038OR**	**125,44**

Racor macho JIC 37° - macho Métrico

Metric adaptor male - male JIC 37°

Adapteur mâle JIC 37° - mâle Métrique

Niples di congiunzione maschio JIC 37° - maschio Metrico

TUBO PIPE		ROSCA THREAD		Referencia Part n°	€
6	1/4"	M10x1	7/16" 20h UNF	**ZS2400610**	**19,58**
8	5/16"	M10x1	1/2" 20h UNF	**ZS2400810***	**18,05**
8	5/16"	M12x1.5	1/2" 20h UNF	**ZS2400812**	**17,82**
8	5/16"	M14x1.5	1/2" 20h UNF	**ZS2400814***	**14,91**
10	3/8"	M12x1.5	9/16" 18h UNF	**ZS2401012**	**21,12**
10	3/8"	M14x1.5	9/16" 18h UNF	**ZS2401014**	**25,36**
10	3/8"	M16x1.5	9/16" 18h UNF	**ZS2401016**	**21,25**
12	1/2"	M14x1.5	3/4" 16h UNF	**ZS2401214**	**24,92**
12	1/2"	M16x1.5	3/4" 16h UNF	**ZS2401216**	**22,25**
12	1/2"	M18x1.5	3/4" 16h UNF	**ZS2401218**	**22,14**
14-15-16	5/8"	M18x1.5	7/8" 14h UNF	**ZS2401418**	**41,97**
14-15-16	5/8"	M27x2	7/8" 14h UNF	**ZS2401427***	**23,94**
14-15-16	5/8"	M22x1.5	7/8" 14h UNF	**ZS2401622**	**44,16**
18-20	3/4"	M22x1.5	1"1/16 12h UN	**ZS2402022**	**44,16**
18-20	3/4"	M27X2	1"1/16 12h UN	**ZS2402027**	**45,50**
25	1"	M27x2	1"5/16 12h UNF	**ZS2402527***	**53,06**
25	1"	M33x2	1"5/16 12h UN	**ZS2402533**	**56,77**
30-32	1" 1/4	M42x2	1"5/8 12h UN	**ZS2403242**	**92,21**
38	1" 1/2	M50x2	1"7/8 12h UN	**ZS2403850**	**134,52**

***Hasta fin de existencias** / *Until end of stock* / Jusqu´à la fin du stock / *Fino ad esaurimento*

RACORES JIC 37°

Flare fittings JIC 37°
Adapteurs JIC 37°
Raccordi JIC 37°

Racor macho JIC 37° - macho NPT

Straight adaptor male JIC 37° - male NPT pipe

Adapteur mâle JIC 37° - mâle NPT (BRIGGS)

Niples di congiunzione JIC 37° - NPT

TUBO PIPE		ROSCA THREAD		Referencia Part n°	€
6	1/4"	7/16" 20h UNF	1/8" NPT	ZS2000610	14,11
6	1/4"	7/16" 20h UNF	1/4" NPT	ZS2000613	10,81
8	5/16"	1/2" 20h UNF	1/8" NPT	ZS2000810	9,78
8	5/16"	1/2" 20h UNF	1/4" NPT	ZS2000813	13,99
8	5/16"	1/2" 20h UNF	3/8" NPT	ZS2000817	23,24
10	3/8"	9/16" 18h UNF	1/8" NPT	ZS2001010	16,16
10	3/8"	9/16" 18h UNF	1/4" NPT	ZS2001013	12,26
10	3/8"	9/16" 18h UNF	3/8" NPT	ZS2001017	14,47
10	3/8"	9/16" 18h UNF	1/2" NPT	ZS2001021	21,10
12	1/2"	3/4" 16h UNF	1/4" NPT	ZS2001213	22,33
12	1/2"	3/4" 16h UNF	3/8" NPT	ZS2001217	16,63
12	1/2"	3/4" 16h UNF	1/2" NPT	ZS2001221	19,36
12	1/2"	3/4" 16h UNF	3/4" NPT	ZS2001226	22,60
14-15-16	5/8"	7/8" 14h UNF	1/2" NPT	ZS2001621	27,32
14-15-16	5/8"	7/8" 14h UNF	3/4" NPT	ZS2001626	29,33
18-20	3/4"	1"1/16 12h UN	1/4" NPT NEW	ZS2002013	39,17
18-20	3/4"	1"1/16 12h UN	1/2" NPT	ZS2002021	26,34
18-20	3/4"	1"1/16 12h UN	3/4" NPT	ZS2002026	28,80
18-20	3/4"	1"1/16 12h UN	1" NPT	ZS2002033	40,93
25	1"	1"5/16 12h UN	3/4" NPT	ZS2002526	37,03
25	1"	1"5/16 12h UN	1" NPT	ZS2002533	36,50
30-32	1"	1"5/16 12h UN	1" 1/4 NPT	ZS2002542	80,37
30-32	1" 1/4	1"5/8 12h UN	1" NPT	ZS2003233	75,91
30-32	1" 1/4	1"5/8 12h UN	1 1/4" NPT	ZS2003242	70,35
38	1" 1/2	1"7/8 12h UN	1" NPT NEW	ZS2003833	84,30
38	1" 1/2	1"7/8 12h UN	1 1/4" NPT	ZS2003842	84,53
38	1" 1/2	1"7/8 12h UN	1 1/2" NPT	ZS2003848	72,10
50	2"	2" 1/2 12h UN	2" NPT NEW	ZS2005060	117,92

Racor macho JIC 37° - macho BSP

Straight adaptor male JIC 37° - male BSP

Adapteur mâle JIC 37° - mâle BSP équipé

Niples di congiunzione JIC - BSP

TUBO PIPE	ROSCA THREAD	TUBO PIPE	ROSCA THREAD	Referencia Part n°	€
6	1/8" BSP	1/4"	7/16" 20h UNF	ZS2300610	11,40
6	1/4" BSP	1/4"	7/16" 20h UNF	ZS2300613	13,14
6	3/8" BSP	1/4"	7/16" 20h UNF	ZS2300617	21,16
6	1/2" BSP	1/4"	7/16" 20h UNF	ZS2300621	40,82
8	1/4" BSP	5/16"	1/2" 20h UNF	ZS2300813	20,41
8	3/8" BSP	5/16"	1/2" 20h UNF	ZS2300817	22,50
10	1/4" BSP	3/8"	9/16" 18h UNF	ZS2301013	14,53
10	3/8" BSP	3/8"	9/16" 18h UNF	ZS2301017	14,32
10	1/2" BSP	3/8"	9/16" 18h UNF	ZS2301021	22,44
12	1/4" BSP	1/2"	3/4" 16h UNF	ZS2301213	19,04
12	3/8" BSP	1/2"	3/4" 16h UNF	ZS2301217	17,45
12	1/2" BSP	1/2"	3/4" 16h UNF	ZS2301221	19,40
12	3/4" BSP	1/2"	3/4" 16h UNF	ZS2301226	36,61
14-15-16	3/8" BSP	5/8"	7/8" 14h UNF	ZS2301617	25,16
14-15-16	1/2" BSP	5/8"	7/8" 14h UNF	ZS2301621	24,29
14-15-16	3/4" BSP	5/8"	7/8" 14h UNF	ZS2301626	35,26
18-20	1/2" BSP	3/4"	1"1/16 12h UN	ZS2302021	30,59
18-20	3/4" BSP	3/4"	1"1/16 12h UN	ZS2302026	26,73
18-20	1" BSP	3/4"	1"1/16 12h UN	ZS2302033	56,46
25	1/2" BSP	1"	1"5/16 12h UN	ZS2302521*	37,97
25	3/4" BSP	1"	1"5/16 12h UN	ZS2302526	36,51
25	1" BSP	1"	1"5/16 12h UN	ZS2302533	52,92
25	1"1/4 BSP	1"	1"5/16 12h UN	ZS2302542	71,67
30-32	1"1/4 BSP	1 1/4"	1"5/8 12h UN	ZS2303242	76,19
38	1"1/4 BSP	1 1/2"	1"7/8 12h UN	ZS2303842	94,18
38	1"1/2 BSP	1 1/2"	1"7/8 12h UN	ZS2303848	118,14
38	2" BSP	1 1/2"	1"7/8 12h UN	ZS2303860	161,41

***Hasta fin de existencias** / *Until end of stock* / Jusqu´à la fin du stock / *Fino ad esaurimento*

Hembra giratoria JIC 37° - macho UNF

Straight adaptor swivel female JIC 37° - male UNF

Adapteur femelle tournante JIC 37° - mâle UNF

Niples femmina girevole JIC 37° - maschio UNF

TUBO PIPE		ROSCA THREAD		Referencia Part n°	€
6	1/4"	7/16" 20h UNF	7/16" 20h UNF	ZS38006	*
10	3/8"	9/16" 18h UNF	9/16" 18h UNF	ZS38010	*
12	1/2"	3/4" 16h UNF	3/4" 16h UNF	ZS38012	*
14-15-16	5/8"	7/8" 14h UNF	7/8" 14h UNF	ZS38016	*
18-20	3/4"	1"1/16 12h UN	1"1/16 12h UN	ZS38020	*
25	1"	1"5/16 12h UN	1"5/16 12h UN	ZS38025	*

***Ver precios en p. 188 (ADAPTADORES O´RING BOSS)** / **See prices in p. 188 (O´RING BOSS ADAPTORS)* / *Voir prix à la p. 188 (ADAPTEURS O´RING BOSS) / **Vedere prezzi p. 188 (ADATTATORI O´RING BOSS)*

Racor macho BSP - hembra giratoria JIC 37°

Straight adaptor male BSP - swivel female JIC 37°

Adapteur mâle BSP - femelle tournante JIC 37°

Niples di congiunzione maschio BSP - femmina girevole JIC 37°

TUBO PIPE		ROSCA THREAD		Referencia Part n°	€
6	1/4"	1/8" BSP	7/16" 20h UNF	ZS1800610	22,30
8	5/16"	1/4" BSP	1/2" 20h UNF	ZS1800813	23,99
10	3/8"	1/4" BSP	9/16" 18h UNF	ZS1801013	19,39
10	3/8"	3/8" BSP	9/16" 18h UNF	ZS1801017	24,32
10	3/8"	1/2" BSP	9/16" 18h UNF	ZS1801021	29,28
12	1/2"	3/8" BSP	3/4" 16h UNF	ZS1801217	23,37
14-15-16	5/8"	1/2" BSP	7/8" 14h UNF	ZS1801621	28,35
18-20	3/4"	3/4" BSP	1" 1/16 12h UNF	ZS1802026	42,08
25	1"	1" BSP	1" 5/16 12h UNF	ZS1802533	66,67
30-32	1" 1/4	1" 1/4 BSP	1" 5/8 12h UNF	ZS1803242	112,67
38	1" 1/2	1" 1/2 BSP	1" 7/8 12h UNF	ZS1803848	164,49

***Consultar** / On request/ **Sur demande** / Su richiesta

RACORES JIC 37°

Flare fittings JIC 37°
Adapteurs JIC 37°
Raccordi JIC 37°

Racor macho JIC 37° - macho BSPT

Straight adaptor male JIC 37° - male BSPT

Adapteur mâle JIC 37° - mâle BSPT

Niples di congiunzione JIC - BSPT

TUBO PIPE		ROSCA THREAD		Referencia Part n°	€
6	1/4"	7/16" 20h UNF	1/8" BSPT	**ZS2100610**	**15,57**
6	1/4"	7/16" 20h UNF	1/4" BSPT	**ZS2100613**	**13,05**
8	5/16"	1/2" 20h UNF	1/8" BSPT	**ZS2100810**	**13,77**
8	5/16"	1/2" 20h UNF	1/4" BSPT	**ZS2100813**	**15,28**
8	5/16"	1/2" 20h UNF	3/8" BSPT	**ZS2100817**	**14,09**
10	3/8"	9/16" 18h UNF	1/4" BSPT	**ZS2101013**	**15,08**
10	3/8"	9/16" 18h UNF	3/8" BSPT	**ZS2101017**	**17,56**
10	3/8"	9/16" 18h UNF	1/2" BSPT	**ZS2101021**	**21,50**
12	1/2"	3/4" 16h UNF	1/4" BSPT	**ZS2101213**	**19,47**
12	1/2"	3/4" 16h UNF	3/8" BSPT	**ZS2101217**	**17,85**
12	1/2"	3/4" 16h UNF	1/2" BSPT	**ZS2101221**	**17,24**
12	1/2"	3/4" 12h UNF	3/4" BSPT	**ZS2101226**	**23,46**
14-15-16	5/8"	7/8" 14h UNF	3/8" BSPT	**ZS2101617**	**23,76**
14-15-16	5/8"	7/8" 14h UNF	1/2" BSPT	**ZS2101621**	**23,04**
14-15-16	5/8"	7/8" 14h UNF	3/4" BSPT	**ZS2101626**	**27,73**
18-20	3/4"	1"1/16 12h UN	1/2" BSPT	**ZS2102021**	**28,74**
18-20	3/4"	1"1/16 12h UN	3/4" BSPT	**ZS2102026**	**28,56**
18-20	3/4"	1"1/16 12h UN	1" BSPT	**ZS2102033**	**40,23**
25	1"	1"5/16 12h UN	3/4" BSPT	**ZS2102526**	**45,12**
25	1"	1"5/16 12h UN	1" BSPT	**ZS2102533**	**37,60**
30-32	1" 1/4	1"5/8 12h UN	1" BSPT	**ZS2103233**	**59,70**
30-32	1" 1/4	1"5/8 12h UN	1 1/4" BSPT	**ZS2103242**	**62,88**
38	1" 1/2	1"7/8 12h UN	1 1/2" BSPT	**ZS2103848**	**82,09**

Racor macho JIC 37° - hembra fija NPT

Straight adaptor male JIC 37° - fixed female NPT

Adapteur mâle JIC 37° - femelle fixe NPT

Niples di congiunzione maschio JIC 37° - femmina fissa NPT

TUBO PIPE		ROSCA THREAD		Referencia Part n°	€
6	1/4"	7/16"-20h UNF	1/8 NPT	**ZS2950610**	**18,58**
6	1/4"	7/16"-20h UNF	1/4 NPT	**ZS2950613**	**25,32**
8	5/16"	1/2"-20h UNF	1/4 NPT	**ZS2950813**	**27,37**
8	5/16"	1/2"-20h UNF	3/8 NPT	**ZS2950817**	*
10	3/8"	9/16"-20h UNF	1/4 NPT	**ZS2951013**	**30,94**
10	3/8"	9/16"-20h UNF	3/8 NPT	**ZS2951017**	**32,85**
12	1/2"	3/4"-20h UNF	1/4 NPT	**ZS2951213**	**25,45**
12	1/2"	3/4"-20h UNF	3/8 NPT	**ZS2951217**	**23,57**
12	1/2"	3/4"-20h UNF	1/2" NPT	**ZS2951221**	**33,95**
14-15-16	5/8"	7/8"-14h UNF	1/2" NPT	**ZS2951621**	**36,73**
18-20	3/4"	1"1/16-12h UNF	3/4" NPT	**ZS2952026**	**43,05**
18-20	3/4"	1"1/16-12h UNF	1" NPT	**ZS2952033**	*
25	1"	1"5/16-12 UNF	1" NPT	**ZS2952533**	**59,12**
25	1"	1"5/16-12 UN	1"1/4 NPT	**ZS2952542**	*

Adaptador Macho JIC - hembra giratoria JIC 37°

NEW

Adaptor male JIC - swivel female JIC

Adapteur mâle JIC x femelle tournante JIC

Niples maschio JIC - femmina girevole JIC 37°

PIPE TUBO		THREAD ROSCA		Part n° Referencia	€
6	1/4"	7/16" 20 UNF	7/16" 20 UNF	**ZS7400606**	**16,82**
8	5/16"	1/2" 20 UNF	1/2" 20 UNF	**ZS7400808**	**19,08**
10	3/8"	9/16" 18 UNF	9/16" 18 UNF	**ZS7401010**	**22,83**
12	1/2"	3/4" 16 UNF	3/4" 16 UNF	**ZS7401212**	**25,36**
14-15-16	5/8"	7/8" 14 UNF	7/8" 14 UNF	**ZS7401616**	**30,43**
18-20	3/4"	1"1/16 12 UNF	1"1/16 12 UNF	**ZS7402020**	**39,83**
25	1"	1"5/16 12 UNF	1"5/16 12 UNF	**ZS7402525**	**52,18**

*Consultar / On request / Sur demande / Su richiesta

RACORES JIC 37°

Flare fittings JIC 37°
Adapteurs JIC 37°
Raccordi JIC 37°

Racor reducción macho JIC 37° - hembra giratoria JIC 37° NEW

Reducer adaptor male JIC 37° -swivel female JIC 37°

Adapteur réduction mâle JIC 37° - femelle tournante JIC 37°

Niples di riduzione maschio - femmina girevole JIC 37°

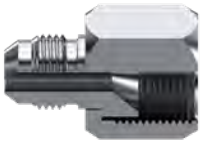

ROSCA (H) THREAD (F)	ROSCA (M) THREAD (M)	TUBO (H) PIPE (F)	TUBO (M) PIPE (M)	Referencia Part n°	€
9/16" 18h UNF	7/16" 20h UNF	10	6	**ZS2911006**	**18,06**
9/16" 18h UNF	3/4" 16h UNF	10	12	**ZS2911012**	**36,33**
9/16" 18h UNF	7/8" 14h UNF	10	14-15-16	**ZS2911016**	**30,39**
3/4" 16h UNF	7/16" 20h UNF	12	6	**ZS2911206**	**19,81**
3/4" 16h UNF	1/2" 20h UNF	12	8	**ZS2911208**	**22,52**
3/4" 16h UNF	9/16" 18h UNF	12	10	**ZS2911210**	**27,00**
3/4" 16h UNF	11 1/16" 12h UN	12	18-20	**ZS2911220**	**40,62**
3/4" 16h UNF	1"5/16 12h UN	12	25	**ZS2911225**	**45,46**
7/8" 14h UNF	7/16" 20h UNF	14-15-16	6	**ZS2911606**	**23,54**
7/8" 14h UNF	9/16" 18h UNF	14-15-16	10	**ZS2911610**	**26,42**
7/8" 14h UNF	1"1/16 12h UN	14-15-16	18-20	**ZS2911620**	**37,27**
1"1/16 12h UN	7/16" 20h UNF	18-20	6	**ZS2912006**	**35,90**
1"1/16 12h UN	9/16" 18h UNF	18-20	10	**ZS2912010**	**32,17**
1"1/16 12h UN	3/4" 16h UNF	18-20	12	**ZS2912012**	**30,41**
1"5/16 12h UN	1 1/16" 12h UN	25	18-20	**ZS2912520**	**54,17**
7/8" 14h UNF	1" 5/8 12h UN	32	16	**ZS2913216**	**73,51**
1"1/16 12h UN	1" 5/8 12h UN	32	20	**ZS2913220**	**66,65**
1"5/8 12h UN	1"5/16 12h UN	30-32	25	**ZS2913225**	**68,85**

Pueden ser suministradas con tuerca libre o prensada / *Material could be delivered with loose or crimped nut* / Peut être livrée avec écrou libre ou pré-serti / *Fornibile con dado libero o pressato*

Racor reducción macho JIC 37 - hembra fija JIC 37°

Reducer adaptor male JIC 37° - fixed female JIC 37°

Adapteur réduction mâle JIC 37° - femelle fixe JIC 37°

Niples di riduzione maschio - femmina fissa JIC 37°

TUBO (H) PIPE (F)	TUBO (M) PIPE (M)	ROSCA (H) THREAD (F)	ROSCA (M) THREAD (M)	Referencia Part n°	€
6	8	7/16" 20h UNF	1/2" 20h UNF	**ZS2900608**	**15,44**
6	12	7/16" 20h UNF	3/4" 16h UNF	**ZS2900612**	*
6	25	7/16" 20h UNF	1"5/16 12h UN	**ZS2900625**	*
8	14-15-16	1/2" 20h UNF	7/8" 14h UNF	**ZS2900816**	*
8	18-20	1/2" 20h UNF	1"1/16 12h UN	**ZS2900820**	*
8	25	1/2" 20h UNF	1"5/16 12h UN	**ZS2900825**	*
10	8	9/16" 18h UNF	1/2" 20h UNF	**ZS2901008**	**25,73**
10	25	9/16" 18h UNF	1"5/16 12h UN	**ZS2901025**	*
12	30-32	3/4" 16h UNF	1"5/8 12h UN	**ZS2901232**	*
12	38	3/4" 16h UNF	1"7/8 12h UN	**ZS2901238**	*
14-15-16	12	7/8" 14h UNF	3/4" 16h UNF	**ZS2901612**	**27,81**
14-15-16	25	7/8" 14h UNF	1"5/16 12h UN	**ZS2901625**	*
14-15-16	30-32	7/8" 14h UNF	1"5/8 12h UN	**ZS2901632**	*
14-15-16	38	7/8" 14h UNF	1"7/8 12h UN	**ZS2901638**	*
18-20	30-32	1"1/16 12h UN	1"5/16 12h UN	**ZS2902025**	*
18-20	30-32	1"1/16 12h UN	1"5/8 12h UN	**ZS2902032**	**65,48**
25	30-32	1"5/16 12h UN	1"5/8 12h UN NEW	**ZS2902532**	*
25	38	1"5/16 12h UN	1"7/8 12h UN	**ZS2902538**	**76,81**
38	30-32	1"7/8 12h UN	1"5/8 12h UN	**ZS2903832**	**133,97**

***Consultar** / On request**/ Sur demande** / Su richiesta

RACORES JIC 37°

Flare fittings JIC 37°
Adapteurs JIC 37°
Raccordi JIC 37°

Hembra giratoria JIC 37° - macho NPT

Straight adaptor swivel female JIC 37° - male NPT pipe

Adapteur femelle tournante JIC 37° - mâle NPT

Niples femmina girevole JIC 37° - maschio NPT

ROSCA THREAD			Referencia Part n°	€
7/16"-20h UNF	1/4" NPT		ZS1850613	25,91
9/16"-18h UNF	3/8" NPT		ZS1851017	25,44
3/4"-16h UNF	3/8" NPT		ZS1851217	25,43
3/4"-16h UNF	1/2" NPT		ZS1851221	37,23
7/8"-14h UNF	1/2" NPT		ZS1851621	34,23
1"1/16-12h UNF	3/4" NPT		ZS1852026	38,67
1"5/16-12h UNF	1" NPT		ZS1852533	68,38
1" 7/8-12h UN	1" 1/2 NPT	NEW	ZS1853848	130,06

Juntas tóricas FKM verde para macho Métrico

FKM green o'ring for Metric thread

Joint torique FKM vert pour filetage métrique

Guarnizione FKM verde per maschio metrico

ROSCA THREAD	Referencia Part n°	€
M10x1	JVMET10	0,24
M14x1.5	JVMET14	0,32
M16x1.5	JVMET16	0,37
M18x1.5	JVMET18	0,46
M22x1.5	JVMET22	0,54
M27x2	JVMET27	0,71
M33x2	JVMET33	1,71
M42x2	JVMET42	3,23
M50x2	JVMET50	1,50

Juntas tóricas FKM verde para rosca UNF

FKM green o'ring for UNF thread

Joint torique FKM vert pour filetage UNF

Guarnizione FKM verde per filetto UNF

ROSCA THREAD	Referencia Part n°	€
7/16" UNF	JVUNF06	0,36
1/2" UNF	JVUNF08	0,61
9/16" UNF	JVUNF10	0,92
3/4" UNF	JVUNF12	0,87
7/8" UNF	JVUNF16	1,13
1" 1/16 UNF	JVUNF20	1,31
1"5/16 UNF	JVUNF25	3,16
1" 5/8 UNF	JVUNF32	5,05
1" 7/8 UNF	JVUNF38	4,08

Racor hembra giratoria - hembra giratoria JIC 37°

Straight adaptor swivel female JIC 37°

Adapteur femelle tournante JIC 37°

Niples femmina - femmina girevole JIC

TUBO PIPE		ROSCA THREAD	Referencia Part n°	€
6	1/4"	7/16" 20h UNF	ZS73006	22,41
8	5/16"	1/2" 20h UNF	ZS73008	22,78
10	3/8"	9/16" 18h UNF	ZS73010	22,60
12	1/2"	3/4" 16h UNF	ZS73012	24,34
14-15-16	5/8"	7/8" 14h UNF	ZS73016	32,76
18-20	3/4"	1"1/16 12h UN	ZS73020	48,56
25	1"	1"5/16 12h UN	ZS73025	68,23
32	1"1/4	1"5/8 12h UN	ZS73032	124,63
38	1"1/2	1"7/8 12h UN	ZS73038	145,31

Juntas tóricas FKM verde para macho BSP

FKM green o'ring for BSP thread

Joint torique FKM vert pour mâle BSP

Guarnizione FKM verde per maschio BSP

ROSCA THREAD	Referencia Part n°	€
1/8" BSP	JVMBSP02	0,27
1/4" BSP	JVMBSP04	0,37
3/8" BSP	JVMBSP06	0,45
1/2" BSP	JVMBSP08	0,58
3/4" BSP	JVMBSP12	0,71
1" BSP	JVMBSP16	1,56
1"1/4 BSP	JVMBSP20	1,97
1"1/2 BSP	JVMBSP24	2,22
2" BSP	JVMBSP32	3,29

Juntas para Macho JIC FKM verde

FKM green o'ring for JIC male thread

Joint FKM vert pour mâle JIC

Guarnizione per maschio JIC FKM verde

ROSCA THREAD	Referencia Part n°	€
7/16" 20h UNF	JTVJIC07	0,17
9/16" 18h UNF	JTVJIC09	0,17
3/4" 16h UNF	JTVJIC12	0,22
1"1/16 12h UNF	JTVJIC17	0,29
1" 5/16 12h UN	JTVJIC21	0,28
1"5/8 12h UNF	JTVJIC26	0,39

RACORES JIC 37°

Flare fittings JIC 37°
Adapteurs JIC 37°
Raccordi JIC 37°

Codo 90° macho - macho JIC 37°

90° Elbow male - male JIC 37°

Coude 90° mâle - mâle JIC 37°

Adattatore a 90° maschio - maschio JIC 37°

TUBO PIPE		ROSCA THREAD	Referencia Part n°	€
6	1/4"	7/16" 20h UNF	**ZS50006**	**27,28**
8	5/16"	1/2" 20h UNF	**ZS50008**	**29,57**
10	3/8"	9/16" 18h UNF	**ZS50010**	**26,31**
12	1/2"	3/4" 16h UNF	**ZS50012**	**46,29**
14-15-16	5/8"	7/8" 14h UNF	**ZS50016**	**71,16**
18-20	3/4"	1"1/16 12h UN	**ZS50020**	**76,72**
25	1"	1"5/16 12h UN	**ZS50025**	**94,31**
30-32	1"1/4	1"5/8 12h UN	**ZS50032**	**121,03**
38	1"1/2	1"7/8 12h UN	**ZS50038**	**214,11**

Codo 90° macho - macho JIC 37° con junta

90° Elbow male - male JIC 37° with o'ring

Coude 90° mâle - mâle JIC 37° avec o'ring

Adattatore a 90° maschio - maschio JIC 37° con o'ring

TUBO PIPE		ROSCA THREAD	Referencia Part n°	€
6	1/4"	7/16" 20h UNF	**ZS500060R**	**37,98**
8	5/16"	1/2" 20h UNF	**ZS500080R**	**41,14**
10	3/8"	9/16" 18h UNF	**ZS500100R**	**39,83**
12	1/2"	3/4" 16h UNF	**ZS500120R**	**49,76**
14-15-16	5/8"	7/8" 14h UNF	**ZS500160R**	**70,51**
18-20	3/4"	1"1/16 12h UN	**ZS500200R**	**94,93**
25	1"	1"5/16 12h UN	**ZS500250R**	**137,35**
30-32	1" 1/4	1"5/8 12h UN	**ZS500320R**	**168,78**
38	1" 1/2	1"7/8 12h UN	**ZS500380R**	**291,37**

Codo 90° macho JIC 37° - hembra giratoria JIC 37°

90° Elbow swivel female JIC 37° - male JIC 37°

Coude 90° mâle JIC 37° - femelle tournante JIC 37°

Adattatore a 90° maschio JIC 37° - femmina girevole JIC 37°

TUBO PIPE		ROSCA THREAD		Referencia Part n°	€
6	1/4"	7/16" 20h UNF	7/16" 20h UNF	**ZS67506**	**32,93**
8	5/16"	1/2" 20h UNF	1/2" 20h UNF	**ZS67508**	**33,40**
10	3/8"	9/16" 18h UNF	9/16" 18h UNF	**ZS67510**	**31,78**
12	1/2"	3/4" 16h UNF	3/4" 16h UNF	**ZS67512**	**49,91**
14-15-16	5/8"	7/8" 14h UNF	7/8" 14h UNF	**ZS67516**	**57,46**
18-20	3/4"	1"1/16 12h UNF	1"1/16 12h UNF	**ZS67520**	**72,48**
25	1"	1"5/16 12h UNF	1"5/16 12h UNF	**ZS67525**	**119,49**
30-32	1"1/4	1"5/8 12h UNF	1"5/8 12h UNF	**ZS67532**	**154,29**
38	1"1/2	1"7/8 12h UNF	1"7/8 12h UNF	**ZS67538**	**225,04**

Codo 90° pasatabiques macho - macho JIC 37°

90° Bulkhead elbow male - male JIC 37°

Coude 90° passe cloison mâle-mâle JIC 37°

Adattatore a 90° passaparete maschio - maschio JIC 37°

TUBO PIPE		ROSCA THREAD		Referencia Part n°	€
6	1/4"	7/16" - 20h UNF	7/16" - 20h UNF	**ZS65006**	**68,13**
8	5/16"	1/2" - 20h UNF	1/2" - 20h UNF	**ZS65008**	**80,41**
10	3/8"	9/16" - 18h UNF	9/16" - 18h UNF	**ZS65010**	**79,07**
12	1/2"	3/4" - 16h UNF	3/4" - 16h UNF	**ZS65012**	**95,93**
14-15-16	5/8"	7/8" - 14h UNF	7/8" - 14h UNF	**ZS65016**	**118,74**
18-20	3/4"	1" 1/16 - 12h UN	1" 1/16 - 12h UN	**ZS65020**	**174,76**
25	1"	1" 5/16 - 12h UN	1" 5/16 - 12h UN	**ZS65025**	**208,08**

Codo 90° macho JIC 37° - hembra fija NPT

NEW

90° Elbow male JIC 37° - fixed female NPT

Coude 90° JIC 37° - femelle fixe NPT

Adattatore a 90° maschio JIC 37° - femmina fissa NPT

PIPE TUBO		THREAD ROSCA		Part n° Referencia	€
6	1/4"	7/16" 20h UNF	1/4" NPT	**ZS7000613**	*
10	3/8"	9/16" 18h UNF	3/8" NPT	**ZS7001017**	*
12	1/2"	3/4" 16h UNF	1/2" NPT	**ZS7001221**	*
18-20	3/4"	1"1/16 12h UNF	3/4" NPT	**ZS7002026**	*
25	1"	1"5/16 12h UNF	1" NPT	**ZS7002533**	*

Codo 90° regulable macho JIC 37° - macho BSP

90° Adjustable stud elbow male JIC 37°-male BSP

Coude 90° orientable mâle JIC 37°- mâle BSP

Adattatore a 90° orientabile maschio JIC 37°- maschio BSP

TUBO PIPE		ROSCA THREAD		Referencia Part n°	€
6	1/4"	7/16" 20h UNF	1/4" BSP	**ZS5700613**	**23,46**
10	3/8"	9/16 18H UNF	1/4" BSP	**ZS5701013**	**55,69**
10	3/8"	9/16" 18h UNF	3/8" BSP	**ZS5701017**	**56,58**
12	1/2"	3/4 20H UNF	3/8" BSP	**ZS5701217**	**64,72**
12	1/2"	3/4" 16h UNF	1/2" BSP	**ZS5701221**	**54,52**
14-15-16	5/8"	7/8" 14h UNF	1/2" BSP	**ZS5701621**	**59,42**
18-20	3/4"	1"1/16 12h UN	3/4" BSP	**ZS5702026**	**86,63**
25	1"	1"5/16 12h UN	1" BSP	**ZS5702533**	**136,95**
30-32	1" 1/4	1 5/8 12H UN	1" 1/4 BSP	**ZS5703242**	**466,56**
38	1" 1/2	1"7/8 12h UN	1"1/2 BSP	**ZS5703848**	**825,42**

***Consultar** / On request/ **Sur demande** / Su richiesta

RACORES JIC 37°

Flare fittings JIC 37°
Adapteurs JIC 37°
Raccordi JIC 37°

Codo 90° regulable macho O'Ring Boss - macho JIC 37

90° Adjustable elbow male O'Ring Boss -male JIC 37°

Coude 90° orientable mâle O'Ring Boss - mâle JIC 37°

Curva a 90° regolabile maschio o-ring Boss -maschio JIC 37°

TUBO PIPE		ROSCA THREAD		Referencia Part n°	€
6	1/4"	7/16" - 20h UNF	7/16" - 20h UNF	**ZS57506**	*
8	5/16"	1/2" - 20h UNF	1/2" - 20h UNF	**ZS57508**	*
10	3/8"	9/16" - 18h UNF	9/16" - 18h UNF	**ZS57510**	*
12	1/2"	3/4" - 16h UNF	3/4" - 16h UNF	**ZS57512**	*
14-15-16	5/8"	7/8" - 14h UNF	7/8" - 14h UNF	**ZS57516**	*
18-20	3/4"	1" 1/16 - 12h UN	1" 1/16 - 12h UN	**ZS57520**	*
25	1"	1" 5/16 - 12h UN	1" 5/16 - 12h UN	**ZS57525**	*

***Ver precios en p. 189 (ADAPTADORES O´RING BOSS)** / **See prices in p. 189 (O´RING BOSS ADAPTORS)* / *Voir prix à la p. 189 (ADAPTEURS O´RING BOSS) / **Vedere prezzi p. 189 (ADATTATORI O´RING BOSS)*

Codo 90° macho JIC 37° - macho BSPT

90° Elbow male JIC 37° - male BSPT

Coude 90° mâle JIC 37° - mâle BSPT

Adattatore a 90° maschio JIC 37° - maschio BSPT

TUBO PIPE		ROSCA THREAD		Referencia Part n°	€
6	1/4"	1/8" BSPT	7/16" 20h UNF	**ZS5500610**	**36,72**
6	1/4"	1/4" BSPT	7/16" 20h UNF	**ZS5500613**	**37,45**
8	5/16"	1/8" BSPT	1/2" 20h UNF	**ZS5500810**	**38,38**
8	5/16"	1/4" BSPT	1/2" 20h UNF	**ZS5500813**	**36,48**
10	3/8"	1/4" BSPT	9/16" 18h UNF	**ZS5501013**	**32,69**
10	3/8"	3/8" BSPT	9/16" 18h UNF	**ZS5501017**	**45,40**
10	3/8"	1/2" BSPT	9/16" 18h UNF	**ZS5501021**	**53,60**
12	1/2"	1/4" BSPT	3/4" 16h UNF	**ZS5501213**	**51,04**
12	1/2"	3/8" BSPT	3/4" 16h UNF	**ZS5501217**	**60,28**
12	1/2"	1/2" BSPT	3/4" 16h UNF	**ZS5501221**	**46,70**
14-15-16	5/8"	3/8" BSPT	7/8" 14h UNF	**ZS5501617**	**59,26**
14-15-16	5/8"	1/2" BSPT	7/8" 14h UNF	**ZS5501621**	**66,64**
14-15-16	5/8"	3/4" BSPT	7/8" 14h UNF	**ZS5501626**	**113,10**
18-20	3/4"	1/2" BSPT	1"1/16 12h UN	**ZS5502021**	**77,27**
18-20	3/4"	3/4" BSPT	1"1/16 12h UN	**ZS5502026**	**80,83**
25	1"	3/4" BSPT	1"5/16 12h UN	**ZS5502526**	**141,22**
25	1"	1" BSPT	1"5/16 12h UN	**ZS5502533**	**125,51**
30-32	1" 1/4	1 1/4" BSPT	1"5/8 12h UN	**ZS5503242***	**226,25**

***Hasta fin de existencias** / *Until end of stock* / Jusqu´à la fin du stock / *Fino ad esaurimento*

Codo 90° macho NPT - hembra giratoria JIC 37°

90° Elbow male NPT - swivel female JIC 37°

Coude 90° mâle NPT - femelle tournante JIC 37°

Adattatore a 90° maschio NPT - femmina girevole JIC 37°

ROSCA THREAD		Referencia Part n°	€
1/8" NPT	7/16"-20h UNF	**ZS5950610**	**29,69**
1/4" NPT	1/2"-20h UNF	**ZS5950813**	**32,75**
1/4" NPT	9/16"-18h UNF	**ZS5951013**	**33,61**
3/8" NPT	3/4"-16h UNF	**ZS5951217**	**46,04**
1/2" NPT	7/8"-14h UNF	**ZS5951621**	**60,70**
3/4" NPT	1"1/16"-12h UN	**ZS5952026**	**93,33**
1" NPT	1"5/16"-12h UN	**ZS5952533**	**114,48**

Codo 90° macho JIC 37° - macho NPT

90° Elbow male JIC 37° - male NPT

Coude 90° mâle JIC 37° - mâle NPT

Adattatore a 90° maschio JIC 37° - maschio NPT

TUBO PIPE		ROSCA THREAD		Referencia Part n°	€
6	1/4"	1/8" NPT	7/16" 20h UNF	**ZS5250610**	**35,22**
6	1/4"	1/4" NPT	7/16" 20h UNF	**ZS5250613**	**33,17**
8	5/16"	1/8" NPT	1/2" 20h UNF	**ZS5250810**	**30,11**
8	5/16"	1/4" NPT	1/2" 20h UNF	**ZS5250813**	**29,37**
10	3/8"	1/4" NPT	9/16" 18h UNF	**ZS5251013**	**27,29**
10	3/8"	3/8" NPT	9/16" 18h UNF	**ZS5251017**	**33,84**
10	3/8"	1/2" NPT	9/16" 18h UNF	**ZS5251021**	**45,25**
12	1/2"	1/4" NPT	3/4" 16h UNF	**ZS5251213**	**41,69**
12	1/2"	3/8" NPT	3/4" 16h UNF	**ZS5251217**	**47,62**
12	1/2"	1/2" NPT	3/4" 16h UNF	**ZS5251221**	**43,73**
14-15-16	5/8"	3/8" NPT	7/8" 14h UNF	**ZS5251617**	**58,82**
14-15-16	5/8"	1/2" NPT	7/8" 14h UNF	**ZS5251621**	**45,44**
14-15-16	5/8"	3/4" NPT	7/8" 14h UNF	**ZS5251626**	**66,50**
18-20	3/4"	1/2" NPT	1"1/16 12h UN	**ZS5252021**	**76,16**
18-20	3/4"	3/4" NPT	1"1/16 12h UN	**ZS5252026**	**72,25**
25	1"	3/4" NPT	1"5/16 12h UN	**ZS5252526**	**95,33**
25	1"	1" NPT	1"5/16 12h UN	**ZS5252533**	**101,39**
30-32	1" 1/4	1 1/4" NPT	1"5/8 12h UN	**ZS5253242***	**105,08**

***Hasta fin de existencias** / *Until end of stock* / Jusqu´à la fin du stock / *Fino ad esaurimento*

***Consultar** / On request / **Sur demande** / Su richiesta

RACORES JIC 37°

Flare fittings JIC 37°
Adapteurs JIC 37°
Raccordi JIC 37°

Codo 45° macho JIC 37° - hembra giratoria JIC 37°

45° Elbow male JIC 37° - swivel female JIC 37°

Coude 45° mâle JIC 37° - femelle tournante JIC 37°

Adattatore a 45° maschio JIC 37° - femmina girevole JIC 37°

TUBO PIPE		ROSCA THREAD		Referencia Part n°	€
6	1/4"	7/16" 20h UNF	7/16" 20h UNF	**ZS69006**	**18,81**
8	5/16"	1/2" 20h UNF	1/2" 20h UNF	**ZS69008**	**22,13**
10	3/8"	9/16" 18h UNF	9/16" 18h UNF	**ZS69010**	**24,31**
12	1/2"	3/4" 16h UNF	/4" 16h UNF	**ZS69012**	**42,91**
14-15-16	5/8"	7/8" 14h UNF	7/8" 14h UNF	**ZS69016**	**54,52**
18-20	3/4"	1"1/16 12h UN	1"1/16 12h UN	**ZS69020**	**318,01**
25	1"	1"5/16 12h UN	1"5/16 12h UN	**ZS69025**	**464,73**

Codo 45° regulable macho - macho JIC 37°

45° Adjustable stud elbow male - male JIC 37°

Coude 45° orientable mâle - mâle JIC 37°

Adattatore a 45° orientabile maschio - maschio JIC 37°

TUBO PIPE		ROSCA THREAD		Referencia Part n°	€
6	1/4"	7/16" - 20h UNF	7/16" - 20h UNF	**ZS77506**	**74,17**
8	5/16"	1/2" - 20h UNF	1/2" - 20h UNF	**ZS77508**	**76,75**
10	3/8"	9/16" - 18h UNF	9/16" - 18h UNF	**ZS77510**	**70,47**
12	1/2"	3/4" - 16h UNF	3/4" - 16h UNF	**ZS77512**	**87,79**
14-15-16	5/8"	7/8" - 14h UNF	7/8" - 14h UNF	**ZS77516**	**160,14**
18-20	3/4"	1" 1/16 - 12h UN	1" 1/16 - 12h UN	**ZS77520**	**333,35**

Codo 45° macho JIC 37° - macho NPT

45° Elbow male JIC 37° - male NPT pipe

Coude 45° mâle JIC 37° - mâle NPT

Adattatore a 45° maschio JIC 37° - maschio NPT

TUBO PIPE		ROSCA THREAD		Referencia Part n°	€
6	1/4"	1/4" NPT	7/16" 20h UNF	**ZS7250613**	**17,05**
10	3/8"	3/8" NPT	9/16" 18h UNF	**ZS7251017**	**23,06**
12	1/2"	1/2" NPT	3/4" 16h UNF	**ZS7251221**	**35,09**
18-20	3/4"	3/4" NPT	1"1/16 12h UN	**ZS7252026**	**54,52**
25	1"	1" NPT	1"5/16 12h UN	**ZS7252533**	**88,85**

RACORES JIC 37°

Flare fittings JIC 37°
Adapteurs JIC 37°
Raccordi JIC 37°

TE macho - macho - macho JIC 37°

Union tee male JIC 37°

Té égal mâle JIC 37°

Adattatore a T maschio JIC 37°

TUBO PIPE		ROSCA THREAD	Referencia Part n°	€
6	1/4"	7/16" 20h UNF	**ZS50506**	**40,38**
8	5/16"	1/2" 20h UNF	**ZS50508**	**49,26**
10	3/8"	9/16" 18h UNF	**ZS50510**	**39,78**
12	1/2"	3/4" 16h UNF	**ZS50512**	**61,96**
14-15-16	5/8"	7/8" 14h UNF	**ZS50516**	**67,74**
18-20	3/4"	1"1/16 12h UN	**ZS50520**	**95,64**
25	1"	1"5/16 12h UN	**ZS50525**	**136,77**
30-32	1" 1/4	1"5/8 12h UN	**ZS50532**	**202,74**
38	1" 1/2	1"7/8 12h UN	**ZS50538**	**311,67**

TE macho - macho - hembra giratoria JIC 37°

Tee male JIC 37° - male JIC 37° - swivel nut JIC 37°

Té mâle JIC 37° - mâle JIC 37° - femelle tournante JIC 37° au latéral

Adattatore a T maschio - maschio - femmina girevole JIC 37°

TUBO PIPE		ROSCA THREAD	Referencia Part n°	€
6	1/4"	7/16" 20h UNF	**ZS68006**	**50,27**
8	5/16"	1/2" 20h UNF	**ZS68008**	**46,47**
10	3/8"	9/16" 18h UNF	**ZS68010**	**44,26**
12	1/2"	3/4" 16h UNF	**ZS68012**	**61,90**
14-15-16	5/8"	7/8" 14h UNF	**ZS68016**	**72,11**
18-20	3/4"	1"1/16 12h UN	**ZS68020**	**97,42**
25	1"	1"5/16 12h UN	**ZS68025**	**156,30**
32	1" 1/4	1"5/8 12h UN	**ZS68032**	**216,54**
38	1" 1/2	1"7/8 12h UN	**ZS68038**	**294,55**

TE macho JIC 37° - macho JIC 37° - macho NPT

Tee male JIC 37° - male JIC 37° - male NPT

Té mâle JIC 37° - mâle JIC 37° - mâle NPT

Adattatore a T maschio JIC 37° - maschio JIC 37° - maschio NPT

ROSCA THREAD			Referencia Part n°	€
7/16"-20h UNF	7/16"-20h UNF	1/8" NPT	**ZS6300610**	**33,54**
1/2"-20h UNF	1/2"-20h UNF	1/4" NPT	**ZS6300813**	**45,16**
9/16"-18h UNF	9/16"-18h UNF	1/4" NPT	**ZS6301013**	**54,33**
3/4"-16h UNF	3/4"-16h UNF	3/8" NPT	**ZS6301217**	**61,43**
7/8"-14h UNF	7/8"-14h UNF	1/2" NPT	**ZS6301621**	**73,06**
1"1/16-12h UN	1"1/16-12h UN	3/4" NPT	**ZS6302026**	**109,30**
1"5/16-12h UN	1"5/16-12h UN	1" NPT	**ZS6302533**	**121,26**

TE macho - macho - macho JIC 37° con junta

Union tee male JIC 37° with o'ring

Té égal mâle JIC 37° avec o'ring

Adattatore a T maschio JIC 37° con o'ring

TUBO PIPE		ROSCA THREAD	Referencia Part n°	€
6	1/4"	7/16" 20h UNF	**ZS50506OR**	**57,36**
8	5/16"	1/2" 20h UNF	**ZS50508OR**	**52,88**
10	3/8"	9/16" 18h UNF	**ZS50510OR**	**58,65**
12	1/2"	3/4" 16h UNF	**ZS50512OR**	**69,61**
14-15-16	5/8"	7/8" 14h UNF	**ZS50516OR**	**85,36**
18-20	3/4"	1"1/16 12h UN	**ZS50520OR**	**119,26**
25	1"	1"5/16 12h UN	**ZS50525OR**	**179,00**
30-32	1" 1/4	1"5/8 12h UN	**ZS50532OR**	**222,79**
38	1" 1/2	1"7/8 12h UN	**ZS50538OR**	**340,46**

TE macho - hembra giratoria - macho JIC 37°

Tee male JIC 37° - swivel nut JIC 37° - male JIC 37°

Té mâle JIC 37° - femelle tournante JIC 37°- mâle JIC 37°

Adattatore a T maschio - femmina girevole - maschio JIC 37°

TUBO PIPE		ROSCA THREAD	Referencia Part n°	€
6	1/4"	7/16" 20h UNF	**ZS68506**	**53,68**
8	5/16"	1/2" 20h UNF	**ZS68508**	**50,77**
10	3/8"	9/16" 18h UNF	**ZS68510**	**48,34**
12	1/2"	3/4" 16h UNF	**ZS68512**	**63,97**
14-15-16	5/8"	7/8" 14h UNF	**ZS68516**	**76,49**
18-20	3/4"	1"1/16 12h UN	**ZS68520**	**99,18**
25	1"	1"5/16 12h UN	**ZS68525**	**190,61**
32	1" 1/4	1"5/8 12h UN	**ZS68532**	**207,16**
38	1" 1/2	1"7/8 12h UN	**ZS68538**	**277,86**

TE macho JIC 37° - macho NPT - macho JIC 37°

Tee male JIC 37° - male NPT - male JIC 37°

Té mâle JIC 37° - mâle NPT - mâle JIC 37°

Adattatore a T maschio JIC 37° - maschio NPT - maschio JIC 37°

ROSCA THREAD			Referencia Part n°	€
7/16"-20h UNF	1/8" NPT	7/16"-20h UNF	**ZS6250610**	**46,95**
1/2"-20h UNF	1/4" NPT	1/2"-20h UNF	**ZS6250813**	**50,48**
9/16"-18h UNF	1/4" NPT	9/16"-18h UNF	**ZS6251013**	**74,24**
3/4"-16h UNF	3/8" NPT	3/4"-16h UNF	**ZS6251217**	**83,04**
7/8"-14h UNF	1/2" NPT	7/8"-14h UNF	**ZS6251621**	**94,98**
1"1/16-12h UN	3/4" NPT	1"1/16-12h UN	**ZS6252026**	**101,23**
1"5/16-12h UN	1" NPT	1"5/16-12h UN	**ZS6252533**	**121,26**

EVERYTHING BEGINS WITH AN IDEA

TECHNICAL DEPARTMENT

NUESTRO DEPARTAMENTO TÉCNICO MEJORA CONTINUAMENTE

TU SATISFACCIÓN ES NUESTRO COMPROMISO

Garantizamos la calidad de todos los equipos que fabricamos y distribuimos mediante la realización de pruebas de producto y la emisión de certificados. Fabricamos piezas especiales bajo pedido. adaptándonos a las necesidades específicas de cada cliente.

SERVICOS TÉCNICOS DE ALTA CALIDAD

Nuestro equipo altamente cualificado es capaz de asesorarle en conducciones y componentes hidráulicos. asi como en kits de primeros equipos. Actualizamos y verificamos constantemente nuestra página web y fichas técnicas de todos nuestros productos.

DISEÑO CON IMPRESIÓN 3D

Utilizamos tecnología de fabricación aditiva para mejorar y rediseñar productos. Este sistema permite la comprobación total de los productos sin necesidad de fabricar prototipos y pre series. lo que garantiza un uso más efectivo de materias primas.

SOLUCIONES ADAPTADAS

Diseñamos grupos hidráulicos y búscamos soluciones de aprovisionamiento. Para ello. estudiamos de forma individualizada cada caso. evalúa y comprueba los posibles diseños y se adapta a las especificaciones técnicas concretas de cada cliente.

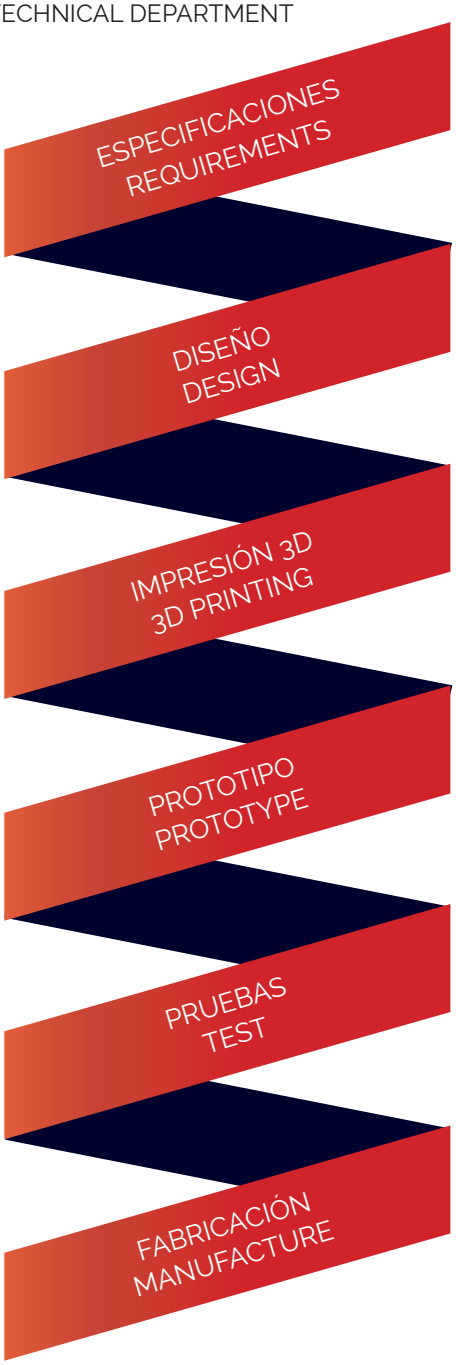

TECHNICAL DEPARTMENT ONGOING IMPROVEMENT

YOUR SATISFACTION IS OUR COMMITMENT

We guarantee the quality of all equipments that we manufacture and distribute. through product tests and issuance of certificates. We manufacture special products upon request.

HIGH QUALITY TECHNICAL CONSULTING SERVICES

Our high qualified team can provide advice on hydraulic and pneumatic connectors. they also offer technical support for Original Equipment Manufacturer. We constantly maintain and update our website and technical data.

3D PRINTING DESIGN

Dicsa implementes additive manufacturing technology, using 3D printer to redesign and improve products. This working method ensures more efficient use of raw materials. so it allows checking products without the need for manufacturing massively with prolonged and costly processes.

CUSTOMISED SOLUTIONS

We design and manufacture customised Hydraulic power packs. responding to your specific needs and offering you adapted solutions. DICSA Hydraulic Department studies and evaluates each case in an individualized way and they will adapt designs to technical specifications of each customer.

TODO COMIENZA CON UNA IDEA

ÁREA TÉCNICA

TUBO TRΔLE® SCH 149
SCH TrΔle Rigid pipe
Tube rigide TrΔle SCH
Tubo rigido TrΔle SCH

RACORES SCH - BUTT WELD 150
SCH BUTT WELD fittings
Raccords SCH - BUTT WELD
Raccordi SCH - BUTT WELDING

RACORES SOCKET WELD 152
SOCKET WELD fittings
Raccords SOCKET WELD
Raccordi SOCKET WELD

BRIDAS SAE 154
SAE Flanges
Brides SAE
Flange SAE

ABRAZADERAS TRΔLE® 161
TrΔle Clamps
Colliers TrΔle
Collari fissatubo TrΔle

03

TUBO RÍGIDO TRΔLE® SCH / RACORES SCH / BRIDAS SAE / ABRAZADERAS

SCH TRLE® Rigid pipe/ SCH fittings / SAE Flanges / Clamps

Tube rigide SCH TrΔle / Embouts SCH/ Brides SAE / Colliers

Tubo rigido TrΔle SCH/Raccordi SCH/ Flange SAE/Collari fissatubo

TUBO TRALE SCH

SCH TrΔle Rigid pipe
Tube rigide TrΔle SCH
Tubo rigido TrΔle SCH

Tubo SCH10 ▪ Schedule 10 ▪ Schedule 10 ▪ Schedule 10 | 149

ZTH10

ZTH10...-3

Tubo SCH40 ▪ Schedule 40 ▪ Schedule 40 ▪ Schedule 40 | 149

ZTH40

ZTH40...-3

RACORES SCH - BUTT WELD

SCH BUTT WELD fittings
Raccords SCH - BUTT WELD
Raccordi SCH - BUTT WELDING

Racores Tubo SCH - BW ▪ SCH -BW Pipe Fittings ▪ Raccords SCH - BW ▪ Raccordi SCH - BW | 150

ZS9010

ZST100

ZSR100

ZSC100

ZS9040

ZST400

ZSR400

ZSC400

RACORES SOCKET WELD

SOCKET WELD fittings
Raccords SOCKET WELD
Raccordi SOCKET WELD

Racores SOCKET WELD 3000 ▪ SOCKET WELD 3000 fittings ▪ Raccords SOCKET WELD 3000 ▪ SOCKET WELD 3000 raccordi | 152

ZSW390 ZSW3C ZSW3T ZSW3CR ZSW3M

Racores SOCKET WELD 6000 ▪ SOCKET WELD 6000 fittings ▪ Raccords SOCKET WELD 6000 ▪ SOCKET WELD 6000 raccordi | 152

ZSW690 ZSW6M

BRIDAS SAE

SAE Flanges
Brides SAE
Flange SAE

154

ZBBP

ZBBE

ZBCE

Bridas roscadas ▪ Threaded flanges ▪ Brides taraudées ▪ Flange filettate 155

ZBBRG

ZBCRG

ZB90RG

Bridas soldables tubo Gas ▪ Welding flanges for gas tube ▪ Brides à souder pour tube gaz ▪ Flange a saldare per tubo gas 156

ZBBSG

ZBCSG

ZB90SG

Bridas soldables tubo Métrico ▪ Welding flanges for metric tube ▪ Brides à souder pour tube métrique ▪ Flange a saldare per tubo Metrico 157

ZBBSM

ZBCSM

ZB90SM

Bridas ciegas ▪ Blind flanges ▪ Brides avec obturateur fermé ▪ Flange cieche 158

ZBBC

ZBCC

Conos soldar ▪ Welding adaptors for flanges ▪ Collets à souder ▪ Ogive a saldare 159

ZBSM*1

ZBSG*1

ZBSM*0

ZBSG*0

ZBSW

Accesorios bridas ▪ Flange accessories ▪ Accessoires pour brides ▪ Accessori flange 160

ZTB

JBR

JUNTAS

ABRAZADERAS TRALE

TrΔle Clamps
Colliers TrΔle
Collari fissatubo TrΔle

Abrazaderas completas serie ligera ▪ Complete clamps light serie ▪ Colliers complets série légère ▪ Collari fissatubo completo serie leggera | 161

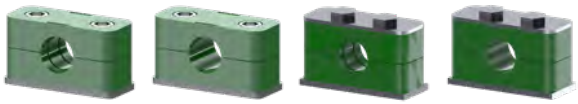

ZA40AZ ZA40AZPL ZA41AZ ZA41AZPL

| 162

A..C ZAPIN ZAPS ZAVTC ZAVTE ZAPA ZAPT

Dobles / paralelas ▪ Double clamp - parallel ▪ Colliers de fixation doubles ▪ Collari fissatubo doppi | 164

ZAZCFS ZADPIN ZADPS AD..C ZADVTE

Abrazaderas serie pesada ▪ Clamps heavy serie ▪ Colliers série lourde ▪ Collari fissatubo serie pesante | 165

ZAZCPS AMPP C ZAPINP ZAPSP ZAVTE TC/TS

TUBO TRΔLE SCH

SCH TrΔle Rigid pipe
Tube rigide TrΔle SCH
Tubo rigido TrΔle SCH

Tubo rígido SCH10 - AISI 316 - 6 METROS

SCH 10 rigid pipe - 6 metres- AISI 316

Tube rigide SCH10 - 6 metres- AISI 316

Tubo rígido SCH10 - AISI 316- 6 metri

DN	Ø EXT. Ø OUTER	Espesor (mm) Thickness (mm)	Referencia Part n°	€/M
1/2"	21.3	2.11	**ZTH10SC008**	**37,15**
3/4"	26.7	2.11	**ZTH10SC012**	**50,04**
1"	33.4	2.77	**ZTH10SC016**	**78,82**
1" 1/4	42.2	2.77	**ZTH10SC020**	**100,22**
1" 1/2	48.3	2.77	**ZTH10SC024**	**115,42**
2"	60.3	2.77	**ZTH10SC032**	**181,31**

Tubo rígido SCH40 - AISI 316 - 6 METROS

SCH 40 rigid pipe - 6 meters - AISI 316

Tube rigide SCH40 - 6 metres - AISI 316

Tubo rígido SCH40 - AISI 316 - 6 metri

DN	Ø EXT. Ø OUTER	Espesor (mm) Thickness (mm)	Referencia Part n°	€/M
1/2"	21.3	2.77	**ZTH40SC008**	**45,43**
3/4"	26.7	2.87	**ZTH40SC012**	**59,10**
1"	33.4	3.38	**ZTH40SC016**	**79,71**
1" 1/4	42.2	3.56	**ZTH40SC020**	**105,03**
1" 1/2	48.3	3.68	**ZTH40SC024**	**128,25**
2"	60.3	3.91	**ZTH40SC032**	**156,98**

Tubo rígido SCH10 - AISI 316 - 3 METROS

SCH 10 rigid pipe - 3 meters - AISI 316

Tube rigide SCH10 - 3 metres - AISI 316

Tubo rígido SCH10 - AISI 316 - 3 metri

DN	Ø EXT. Ø OUTER	Espesor (mm) Thickness (mm)	Referencia Part n°	€/M
1/2"	21.3	2.11	**ZTH10SC008-3**	**39,79**
3/4"	26.7	2.11	**ZTH10SC012-3**	**52,54**
1"	33.4	2.77	**ZTH10SC016-3**	**82,76**
1" 1/4	42.2	2.77	**ZTH10SC020-3**	**105,23**
1" 1/2	48.3	2.77	**ZTH10SC024-3**	**121,20**
2"	60.3	2.77	**ZTH10SC032-3**	**190,37**

Tubo rígido SCH40 - AISI 316 - 3 METROS

SCH 40 rigid pipe - 3 metres- AISI 316

Tube rigide SCH40 - 3 metres- AISI 316

Tubo rígido SCH40 - AISI 316 - 3 metri

DN	Ø EXT. Ø OUTER	Espesor (mm) Thickness (mm)	Referencia Part n°	€/M
1/2"	21.3	2.77	**ZTH40SC008-3**	**47,70**
3/4"	26.7	2.87	**ZTH40SC012-3**	**62,05**
1"	33.4	3.38	**ZTH40SC016-3**	**83,70**
1" 1/4	42.2	3.56	**ZTH40SC020-3**	**110,28**
1" 1/2	48.3	3.68	**ZTH40SC024-3**	**134,66**
2"	60.3	3.91	**ZTH40SC032-3**	**164,83**

AMPLIA **GAMA**
TUBO RÍGIDO

SCHEDULE MÉTRICO STANDARD CROMO III

INOXIDABLE
STAINLESS·STEEL

CARBONO
CARBON·STEEL

SELECT **YOUR**
PIPE TYPE

RACORES SCH - BUTT WELD

SCH BUTT WELD fittings
Raccords SCH - BUTT WELD
Raccordi SCH - BUTT WELDING

Codo 90 SCH10

NEW

Elbow 90 Sch10

Coude 90 Sch10

Gomito 90 per Sch10

DN	Referencia Part n°	€
1/2"	ZS9010008	5,41
3/4"	ZS9010012	6,32
1"	ZS9010016	7,22
1" 1/4	ZS9010020	12,51
1" 1/2	ZS9010024	14,44
2"	ZS9010032	19,85

Te SCH10

NEW

Tee Sch10

Té Sch10

Raccordo Sch10

DN	Referencia Part n°	€
1/2"	ZST10008	13,48
3/4"	ZST10012	16,70
1"	ZST10016	25,52
1" 1/4	ZST10020	33,08
1" 1/2	ZST10024	38,79
2"	ZST10032	54,43

Reducción SCH10

NEW

Reduction Sch10

Réduction Sch10

Riduzione Sch10

DN	Referencia Part n°	€
3/4" - 1/2"	ZSR10012008	6,56
1" - 3/4"	ZSR10016012	7,22
1"1/4 - 1"	ZSR10020016	9,62
1" 1/2 - 1" 1/4	ZSR10024020	10,83
2" - 1" 1/2	ZSR10032024	16,54

Tapón SCH10

NEW

Cap Sch10

Bouchon Sch 10

Tappo Sch10

DN	Referencia Part n°	€
1/2"	ZSC10008	7,22
3/4"	ZSC10012	9,02
1"	ZSC10016	10,83
1" 1/4	ZSC10020	11,43
1" 1/2	ZSC10024	12,63
2"	ZSC10032	15,04

RACORES SCH - BUTT WELD

SCH BUTT WELD fittings
Raccords SCH - BUTT WELD
Raccordi SCH - BUTT WELDING

Codo 90 SCH40

NEW

Elbow 90 Sch40

Coude 90 Sch40

Gomito 90 per Sch40

DN	Referencia Part n°	€
1/2"	ZS9040008	6,75
3/4"	ZS9040012	7,36
1"	ZS9040016	8,28
1" 1/4	ZS9040020	14,73
1" 1/2	ZS9040024	17,18
2"	ZS9040032	28,53

Te Inox SCH40

NEW

Tee Sch40

Té Sch40

Raccordo Sch40

DN	Referencia Part n°	€
1/2"	ZST40008	19,34
3/4"	ZST40012	21,10
1"	ZST40016	28,98
1" 1/4	ZST40020	38,30
1" 1/2	ZST40024	48,71
2"	ZST40032	66,59

Reducción Inox SCH40

NEW

Reduction Sch40

Réduction Sch40

Riduzione Sch40

DN	Referencia Part n°	€
3/4" - 1/2"	ZSR40012008	7,22
1" - 3/4"	ZSR40016012	8,72
1"1/4 - 1"	ZSR40020016	12,33
1" 1/2 - 1" 1/4	ZSR40024020	15,64
2" - 1" 1/2"	ZSR40032024	21,66

Tapón Inox SCH40

NEW

Cap Sch40

Bouchon Sch40

Tappo Sch40

DN	Referencia Part n°	€
1/2"	ZSC40008	8,72
3/4"	ZSC40012	10,23
1"	ZSC40016	13,53
1" 1/4	ZSC40020	14,14
1" 1/2	ZSC40024	15,04
2"	ZSC40032	17,14

RACORES SOCKET WELD

SOCKET WELD fittings
Raccords SOCKET WELD
Raccordi SOCKET WELD

Racores SOCKET WELD 3000 Codo 90

NEW

SOCKET WELD 3000 fittings Elbow 90

Raccords SOCKET WELD 3000 Coude 90

SOCKET WELD 3000 raccordi Gomito 90

DN	Referencia Part n°	€
1/2"	ZSW39008	13,53
3/4"	ZSW39012	18,05
1"	ZSW39016	26,17
1" 1/4	ZSW39020	42,71
1" 1/2	ZSW39024	61,66
2"	ZSW39032	101,96

Racores SOCKET WELD 3000 Cap

NEW

SOCKET WELD 3000 Cap Fittings

Raccords à chapeau SOCKET WELD 3000

SOCKET WELD 3000 Cap Fittings

DN	Referencia Part n°	€
1/2"	ZSW3C08	5,20
3/4"	ZSW3C12	6,85
1"	ZSW3C16	11,23
1"1/4	ZSW3C20	15,07
1"1/2	ZSW3C24	19,17
2"	ZSW3C32	32,60

Racores SOCKET WEL 3000 Te

NEW

SOCKET WELD 3000 Tee fittings

Raccords en T SOCKET WELD 3000

SOCKET WELD 3000 Raccordi a T

DN	Referencia Part n°	€
1/2"	ZSW3T08	19,25
3/4"	ZSW3T12	26,17
1"	ZSW3T16	41,20
1"1/4	ZSW3T20	62,25
1"1/2	ZSW3T24	78,20
2"	ZSW3T32	148,58

Racores SOCKET WELD 3000 Cruz

NEW

SOCKET WELD 3000 Cross Fittings

Raccords croix SOCKET WELD 3000

SOCKET WELD 3000 Cross Fittings

DN	Referencia Part n°	€
1/2"	ZSW3CR08	*
3/4"	ZSW3CR12	*
1"	ZSW3CR16	*
1"1/4	ZSW3CR20	*
1"1/2	ZSW3CR24	*
2"	ZSW3CR32	*

Racores SOCKET WELD 3000 Manguito

NEW

SOCKET WELD 3000 Couplings Fittings

SOCKET WELD 3000 Accouplements Raccords

SOCKET WELD 3000 Giunti Raccordi

DN	Referencia Part n°	€
1/2"	ZSW3M08	6,02
3/4"	ZSW3M12	9,02
1"	ZSW3M16	14,44
1"1/4	ZSW3M20	19,25
1"1/2	ZSW3M24	25,57
2"	ZSW3M32	48,72

Racores SOCKET WELD 6000 Codo 90

NEW

SOCKET WELD 6000 fittings Elbow 90

Raccords SOCKET WELD 6000 Coude 90

SOCKET WELD 6000 raccordi Gomito 90

DN	Referencia Part n°	€
1/2"	ZSW69008	15,61
3/4"	ZSW69012	22,19
1"	ZSW69016	40,27
1"1/4	ZSW69020	49,03

Racores SOCKET WELD 6000 Manguito

NEW

SOCKET WELD 6000 Couplings FittingsFittings

SOCKET WELD 6000 Accouplements Raccords

SOCKET WELD 6000 Giunti Raccordi

DN	Referencia Part n°	€
1/2"	ZSW6M08	8,49
3/4"	ZSW6M12	12,60
1"	ZSW6M16	19,17
1"1/4	ZSW6M20	24,38

*Consultar / On request / Sur demande / Su richiesta

BRIDAS SAE

SAE flanges
Brides SAE
Flangia SAE

Características comunes
Common characteristics
Données communes
Caratteristiche comuni

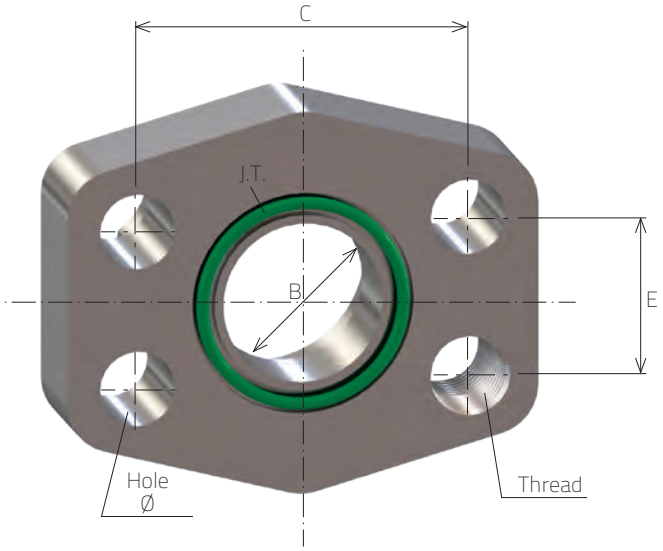

Bridas 3000 PSI
Flanges 3000 PSI
Brides 3000 PSI
Flangia 3000 PSI

Tamaño	Max. pre.	B	C	E	O'ring NBR	Junta PU	Ø	Tornillo *	Rosca
1/2"	345 bar	13	38,1	17,48	18,64 x 3,53	JBR08	9	TB8X30	M8
3/4"	345 bar	19	47,63	22,23	24,99 x 3,53	JBR12	11	TB10X35	M10
1"	345 bar	25	52,37	26,19	32,92 x 3,53	JBR16	11	TB10X35	M10
1 1/4"	276 bar	32	58,72	30,18	37,70 x 3,53	JBR20	11,5	TB10X40	M10
1 1/2"	207 bar	38	69,85	35,71	47,22 x 3,53	JBR24	13,5	TB12X45	M12
2"	207 bar	51	77,77	42,88	56,74 x 3,53	JBR32	13,5	TB12X45	M12
2 1/2"	172 bar	63	88,9	50,8	66,27 x 3,53		13,5	TB12X45	M12
3"	138 bar	73	106,38	61,93	85,32 x 3,53		17,5	TB16X50	M16
3 1/2"	34 bar	89	120,65	69,85	98,02 x 3,53		17,5	TB16X50	M16
4"	34 bar	99	130,18	77,77	110,72 x 3,53		17,5	TB16X50	M16

Bridas 6000 PSI
Flanges 6000 PSI
Brides 6000 PSI
Flangia 6000 PSI

Tamaño	Max. pre.	B	C	E	O'ring NBR	Junta PU	Ø	Tornillo *	Rosca
1/2"	414 bar	13	40,49	18,24	18,64 x 3,53	JBR08	9	TB8X30	M8
3/4"	414 bar	19	50,8	23,8	24,99 x 3,53	JBR12	11	TB10X40	M10
1"	414 bar	25	57,15	27,76	32,92 x 3,53	JBR16	13	TB12X45	M12
1 1/4"	414 bar	32	66,68	31,75	37,70 x 3,53	JBR20	15	TB14X45	M14
1 1/2"	414 bar	38	79,38	36,5	47,22 x 3,53	JBR24	17	TB16X50	M16
2"	414 bar	51	98,82	44,45	56,74 x 3,53	JBR32	21	TB20X70	M20

* Tornillos en acero carbono. Para tornillos en acero inoxidable, pedir ZTB...
Screws are in carbon steel. For Stainless Steel screws, ask for ZTB... part number.
Les vis sont en acier carbone. Pour vis en acier inoxydable, veuillez demander les références ZTB ...
Le viti sono in acciaio al carbonio. Per viti in acciaio inox, ordinare con codice ZTB...

BRIDAS SAE

SAE Flanges
Brides SAE
Flange SAE

Brida partida pasante

SAE Split flange

Demi-bride de fixation

Semiflangia SAE

SERIE SERIES	Ø INT. Ø INNER	TAMAÑO SIZE		Referencia Part n°	€
3000 PSI	30.2	1/2"		**ZBBP308302**	*
3000 PSI	38.1	3/4"		**ZBBP312381**	*
3000 PSI	44.5	1"		**ZBBP316445**	*
3000 PSI	50.8	1"1/4		**ZBBP320508**	*
3000 PSI	60.3	1"1/2		**ZBBP324603**	*
3000 PSI	71.4	2"		**ZBBP332714**	*
3000 PSI	84.1	2" 1/2	NEW	**ZBBP340841**	*
3000 PSI	102.4	3"		**ZBBP3481024**	*
3000 PSI	127	4"	NEW	**ZBBP364127**	*
6000 PSI	31.8	1/2"		**ZBBP608318**	*
6000 PSI	41.3	3/4"		**ZBBP612413**	*
6000 PSI	47.6	1"		**ZBBP616476**	*
6000 PSI	54	1"1/4		**ZBBP620540**	*
6000 PSI	63.5	1"1/2		**ZBBP624635**	*
6000 PSI	79.4	2"		**ZBBP632794**	*

***Ver precios en p. 40** / **See prices in p.40* / *Prix à la p.40 / **Vedere prezzi p.40*

Contrabrida roscada

SAE counter-flange

Contre-bride passage total

Controflangia SAE

SERIE SERIES	Ø INT. Ø INNER	TAMAÑO SIZE	Referencia Part n°	€
3000 PSI	30,2	1/2"	**ZBCE308302**	*
3000 PSI	38,1	3/4"	**ZBCE312381**	*
3000 PSI	44,5	1"	**ZBCE316445**	*
3000 PSI	50,8	1"1/4	**ZBCE320508**	*
3000 PSI	60,3	1"1/2	**ZBCE324603**	*
3000 PSI	71,4	2"	**ZBCE332714**	*
6000 PSI	31,8	1/2"	**ZBCE608318**	*
6000 PSI	41,3	3/4"	**ZBCE612413**	*
6000 PSI	47,6	1"	**ZBCE616476**	*
6000 PSI	54	1"1/4	**ZBCE620540**	*
6000 PSI	63,5	1"1/2	**ZBCE624635**	*
6000 PSI	79,4	2"	**ZBCE632794**	*

Brida entera pasante

SAE Flange

Bride de fixation monobloc

Flangia monoblocco SAE

SERIE SERIES	Ø INT. Ø INNER	TAMAÑO SIZE		Referencia Part n°	€
3000 PSI	30.2	1/2"		**ZBBE308302**	*
3000 PSI	38.1	3/4"		**ZBBE312381**	*
3000 PSI	44.5	1"		**ZBBE316445**	*
3000 PSI	50.8	1"1/4		**ZBBE320508**	*
3000 PSI	60.3	1"1/2		**ZBBE324603**	*
3000 PSI	71.4	2"		**ZBBE332714**	*
3000 PSI	41	2" 1/2	NEW	**ZBBE340841**	*
3000 PSI	102.4	3"	NEW	**ZBBE3481024**	*
3000 PSI	127	4"	NEW	**ZBBE364127**	*
6000 PSI	31.8	1/2"		**ZBBE608318**	*
6000 PSI	41.3	3/4"		**ZBBE612413**	*
6000 PSI	47.6	1"		**ZBBE616476**	*
6000 PSI	54	1"1/4		**ZBBE620540**	*
6000 PSI	63.5	1"1/2		**ZBBE624635**	*
6000 PSI	79.4	2"		**ZBBE632794**	*

***Ver precios en p. 40** / **See prices in p.40* / *Prix à la p.40 / **Vedere prezzi p.40*

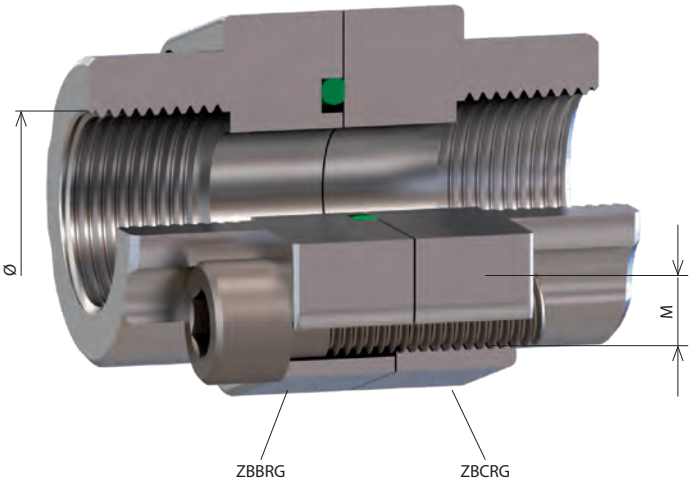

***Consultar** / On request / **Sur demande** / Su richiesta

BRIDAS SAE

SAE Flanges
Brides SAE
Flange SAE

Brida roscada hembra BSP

BSP Female threaded flange

Bride taraudée femelle BSP

Flangia filettata femmina BSP

SERIE SERIES	ROSCA THREAD	TAMAÑO SIZE	Referencia Part n°	€
3000 PSI	1/2" BSP	1/2"	**ZBBRG30808**	**28,08**
3000 PSI	3/4" BSP	3/4"	**ZBBRG31212**	**37,47**
3000 PSI	1" BSP	1"	**ZBBRG31616**	**46,79**
3000 PSI	1"1/4 BSP	1"1/4	**ZBBRG32020**	**59,20**
3000 PSI	1"1/2 BSP	1"1/2	**ZBBRG32424**	**88,59**
3000 PSI	2" BSP	2"	**ZBBRG33232**	**115,17**
3000 PSI	2"1/2 BSP	2"1/2	**ZBBRG34040**	**162,42**
3000 PSI	3" BSP	3"	**ZBBRG34848**	**200,76**
3000 PSI	3"1/2 BSP	3"1/2	**ZBBRG35656**	**817,53**
3000 PSI	4" BSP	4"	**ZBBRG36464**	**883,80**
6000 PSI	1/2" BSP	1/2"	**ZBBRG60808**	**31,22**
6000 PSI	3/4" BSP	3/4"	**ZBBRG61212**	**43,63**
6000 PSI	1" BSP	1"	**ZBBRG61616**	**62,36**
6000 PSI	1"1/4 BSP	1"1/4	**ZBBRG62020**	**84,18**
6000 PSI	1"1/2 BSP	1"1/2	**ZBBRG62424**	**119,20**
6000 PSI	2" BSP	2"	**ZBBRG63232**	**213,49**

Brida codo 90° roscada hembra BSP

90° BSP female threaded flange

Bride 90° taraudée femelle BSP

Flangia a 90° filettata femmina BSP

SERIE SERIES	ROSCA THREAD	TAMAÑO SIZE	Referencia Part n°	€
3000 PSI	1/2" BSP	1/2"	**ZB90RG30808**	**160,83**
3000 PSI	3/4" BSP	3/4"	**ZB90RG31212**	**192,58**
3000 PSI	1" BSP	1"	**ZB90RG31616**	**229,93**
3000 PSI	1"1/4 BSP	1"1/4	**ZB90RG32020**	**275,99**
3000 PSI	1"1/2 BSP	1"1/2	**ZB90RG32424**	**539,12**
3000 PSI	2" BSP	2"	**ZB90RG33232**	**651,66**
6000 PSI	1/2" BSP	1/2"	**ZB90RG60808**	**160,83**
6000 PSI	3/4" BSP	3/4"	**ZB90RG61212**	**229,93**
6000 PSI	1" BSP	1"	**ZB90RG61616**	**275,99**
6000 PSI	1"1/4 BSP	1"1/4	**ZB90RG62020**	**377,27**
6000 PSI	1"1/2 BSP	1"1/2	**ZB90RG62424**	**496,40**

Contrabrida roscada hembra BSP

BSP Female threaded counter-flange

Contre-bride taraudée femelle BSP

Controflangia filettata femmina BSP

SERIE SERIES	ROSCA THREAD	TAMAÑO SIZE	Referencia Part n°	€
3000 PSI	1/2" BSP	1/2"	**ZBCRG30808**	**29,64**
3000 PSI	3/4" BSP	3/4"	**ZBCRG31212**	**37,47**
3000 PSI	1" BSP	1"	**ZBCRG31616**	**46,79**
3000 PSI	1"1/4 BSP	1"1/4	**ZBCRG32020**	**59,20**
3000 PSI	1"1/2 BSP	1"1/2	**ZBCRG32424**	**93,51**
3000 PSI	2" BSP	2"	**ZBCRG33232**	**115,17**
3000 PSI	2"1/2 BSP	2"1/2	**ZBCRG34040**	**162,42**
3000 PSI	3" BSP	3"	**ZBCRG34848**	**211,91**
3000 PSI	3"1/2 BSP	3"1/2	**ZBCRG35656**	**817,53**
3000 PSI	4" BSP	4"	**ZBCRG36464**	**883,80**
6000 PSI	1/2" BSP	1/2"	**ZBCRG60808**	**31,22**
6000 PSI	3/4" BSP	3/4"	**ZBCRG61212**	**43,63**
6000 PSI	1" BSP	1"	**ZBCRG61616**	**62,36**
6000 PSI	1"1/4 BSP	1"1/4	**ZBCRG62020**	**84,18**
6000 PSI	1"1/2 BSP	1"1/2	**ZBCRG62424**	**119,20**
6000 PSI	2" BSP	2"	**ZBCRG63232**	**213,49**

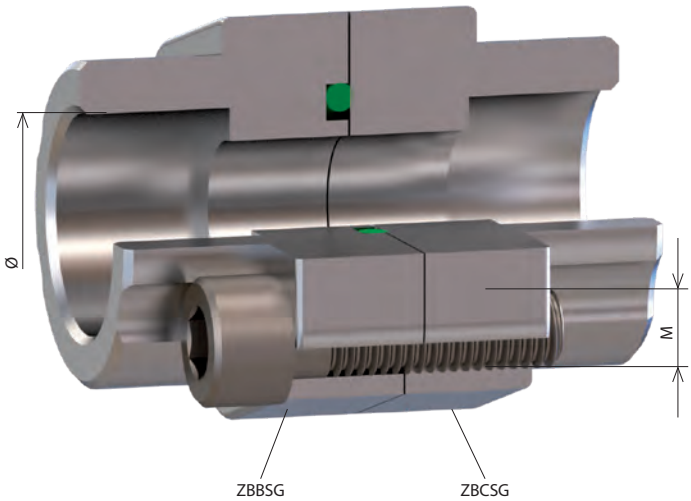

BRIDAS SAE

SAE Flanges
Brides SAE
Flange SAE

Brida soldable hembra tubo gas

Welding female flange for gas tube

Bride à souder femelle tube gaz

Flangia femmina a saldare per tubo gas

SERIE SERIES	Ø INT. Ø INNER	TAMAÑO SIZE	Referencia Part n°	€
3000 PSI	21.6	1/2"	**ZBBSG308216**	**29,64**
3000 PSI	27.2	3/4"	**ZBBSG312272**	**37,47**
3000 PSI	34.0	1"	**ZBBSG316340**	**46,79**
3000 PSI	42.8	1"1/4	**ZBBSG320428**	**59,20**
3000 PSI	48.6	1"1/2	**ZBBSG324486**	**93,51**
3000 PSI	61.0	2"	**ZBBSG332610**	**121,57**
3000 PSI	76.6	2"1/2	**ZBBSG340766**	**171,44**
3000 PSI	90.5	3"	**ZBBSG348905**	**211,91**
3000 PSI	103.0	3"1/2	**ZBBSG3561030**	**773,34**
3000 PSI	115.5	4"	**ZBBSG3641155**	**839,60**
6000 PSI	21.6	1/2"	**ZBBSG608216**	**31,22**
6000 PSI	27.2	3/4"	**ZBBSG612272**	**43,63**
6000 PSI	34.0	1"	**ZBBSG616340**	**62,36**
6000 PSI	42.8	1"1/4	**ZBBSG620428**	**84,18**
6000 PSI	48.6	1"1/2	**ZBBSG624486**	**119,20**
6000 PSI	61.0	2"	**ZBBSG632610**	**213,49**

Brida codo 90° soldable hembra tubo gas

90° welding female flange for gas tube

Bride 90° à souder femelle tube gaz

Flangia a 90° femmina a saldare per tubo gas

SERIE SERIES	Ø INT. Ø INNER	TAMAÑO SIZE	Referencia Part n°	€
3000 PSI	21.6	1/2"	**ZB90SG308216**	**172,07**
3000 PSI	27.2	3/4"	**ZB90SG312272**	**186,64**
3000 PSI	34.0	1"	**ZB90SG316340**	**223,18**
3000 PSI	42.8	1"1/4	**ZB90SG320428**	**268,46**
3000 PSI	48.6	1"1/2	**ZB90SG324486**	**369,71**
3000 PSI	61.0	2"	**ZB90SG332610**	**486,45**
6000 PSI	21.6	1/2"	**ZB90SG608216**	**154,86**
6000 PSI	27.2	3/4"	**ZB90SG612272**	**244,34**
6000 PSI	34.0	1"	**ZB90SG616340**	**268,46**
6000 PSI	42.8	1"1/4	**ZB90SG620428**	**369,71**
6000 PSI	48.6	1"1/2	**ZB90SG624486**	**486,45**

Contrabrida soldable hembra tubo gas

Welding female counter-flange for gas tube

Contre-bride à souder femelle tube gaz

Controflangia femmina a saldare per tubo gas

SERIE SERIES	Ø INT. Ø INNER	TAMAÑO SIZE	Referencia Part n°	€
3000 PSI	21.6	1/2"	**ZBCSG308216**	**29,64**
3000 PSI	27.2	3/4"	**ZBCSG312272**	**37,47**
3000 PSI	34.0	1"	**ZBCSG316340**	**46,79**
3000 PSI	42.8	1"1/4	**ZBCSG320428**	**59,20**
3000 PSI	48.6	1"1/2	**ZBCSG324486**	**93,51**
3000 PSI	61.0	2"	**ZBCSG332610**	**121,57**
3000 PSI	76.6	2"1/2	**ZBCSG340766**	**171,44**
3000 PSI	90.5	3"	**ZBCSG348905**	**211,91**
3000 PSI	103.0	3"1/2	**ZBCSG3561030**	**773,34**
3000 PSI	115.5	4"	**ZBCSG3641155**	**839,60**
6000 PSI	21.6	1/2"	**ZBCSG608216**	**31,22**
6000 PSI	27.2	3/4"	**ZBCSG612272**	**43,63**
6000 PSI	34.0	1"	**ZBCSG616340**	**62,36**
6000 PSI	42.8	1"1/4	**ZBCSG620428**	**84,18**
6000 PSI	48.6	1"1/2	**ZBCSG624486**	**119,20**
6000 PSI	61.0	2"	**ZBCSG632610**	**213,49**

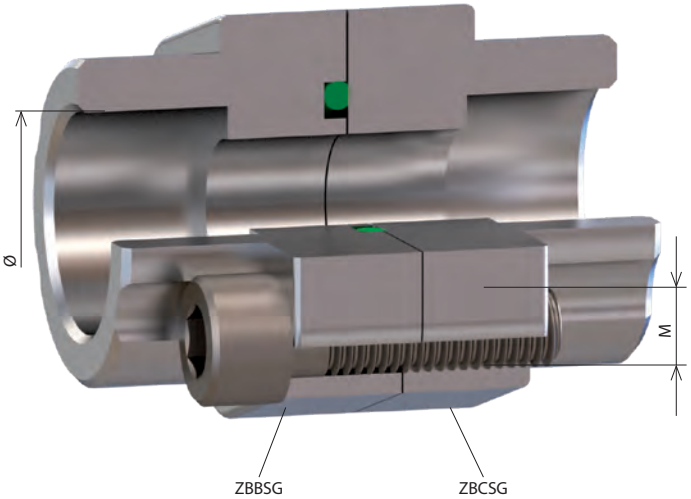

BRIDAS SAE

SAE Flanges
Brides SAE
Flange SAE

Brida soldable hembra tubo métrico

Female welding flange for metric tube

Bride à souder femelle tube métrique

Flangia femmina a saldare per tubo Metrico

SERIE SERIES	Ø INT. Ø INNER	TAMAÑO SIZE	Referencia Part n°	€
3000 PSI	20.3	1/2"	**ZBBSM308203**	**29,64**
3000 PSI	25.3	3/4"	**ZBBSM312253**	**37,47**
3000 PSI	30.3	1"	**ZBBSM316303**	**46,79**
3000 PSI	38.3	1"1/4	**ZBBSM320383**	**59,20**
3000 PSI	50.5	1"1/2	**ZBBSM324505**	**93,51**
6000 PSI	20.3	1/2"	**ZBBSM608203**	**31,22**
6000 PSI	25.3	3/4"	**ZBBSM612253**	**43,63**
6000 PSI	30.3	1"	**ZBBSM616303**	**62,36**
6000 PSI	38.3	1"1/4	**ZBBSM620383**	**84,18**
6000 PSI	50.5	1"1/2	**ZBBSM624505**	**119,20**

Contrabrida soldable hembra tubo métrico

Female welding counter-flange for metric tube

Contre-bride à souder femelle tube métrique

Controflangia femmina a saldare per tubo Metrico

SERIE SERIES	Ø INT. Ø INNER	TAMAÑO SIZE	Referencia Part n°	€
3000 PSI	20.3	1/2"	**ZBCSM308203**	**29,64**
3000 PSI	25.3	3/4"	**ZBCSM312253**	**37,47**
3000 PSI	30.3	1"	**ZBCSM316303**	**46,79**
3000 PSI	38.3	1"1/4	**ZBCSM320383**	**59,20**
3000 PSI	50.5	1"1/2	**ZBCSM324505**	**93,51**
6000 PSI	20.3	1/2"	**ZBCSM608203**	**31,22**
6000 PSI	25.3	3/4"	**ZBCSM612253**	**43,63**
6000 PSI	30.3	1"	**ZBCSM616303**	**62,36**
6000 PSI	38.3	1"1/4	**ZBCSM620383**	**84,18**
6000 PSI	50.5	1"1/2	**ZBCSM624505**	**119,20**

Brida codo 90° soldable Hembra tubo métrico

90° female welding flange for metric tube

Bride 90° à souder femelle tube métrique

Flangia a 90° femmina a saldare per tubo Metrico

SERIE SERIES	Ø INT. Ø INNER	TAMAÑO SIZE	Referencia Part n°	€
3000 PSI	20.3	1/2"	**ZB90SM308203**	*
3000 PSI	25.3	3/4"	**ZB90SM312253**	*
3000 PSI	30.3	1"	**ZB90SM316303**	*
3000 PSI	38.3	1"1/4	**ZB90SM320383**	*
3000 PSI	50.5	1"1/2	**ZB90SM324505**	*
6000 PSI	20.3	1/2"	**ZB90SM608203**	*
6000 PSI	25.3	3/4"	**ZB90SM612253**	*
6000 PSI	30.3	1"	**ZB90SM616303**	*
6000 PSI	38.3	1"1/4	**ZB90SM620383**	*
6000 PSI	50.5	1"1/2	**ZB90SM624505**	*

BRIDAS SOLDABLES MACHO

Male welding flanges
Brides à souder mâle
Flangia a saldare maschio

Brida soldable macho tubo gas

Male welding flange for gas tube
Bride à souder mâle tube gaz
Flangia a saldare maschio tubo gas

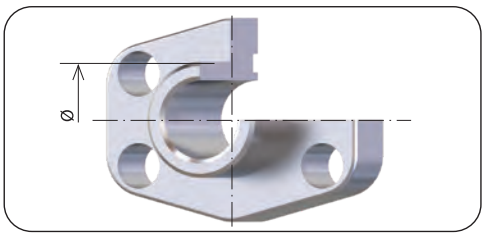

Ref: ZBMSG

Contrabrida macho soldable tubo gas

Male welding counterflange for gas tube
Contre-bride à souder mâle tube gaz
Controflangia a saldare maschio tubo gas

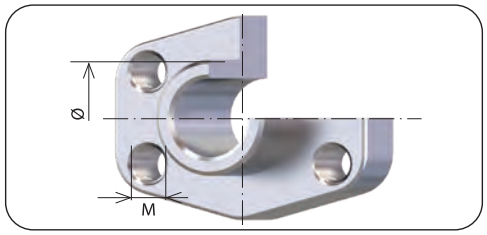

Ref: ZBCMSG

Brida soldable macho tubo métrico

Male welding flange for metric tube
Bride à souder mâle tube métrique
Flangia a saldare maschio tubo metrico

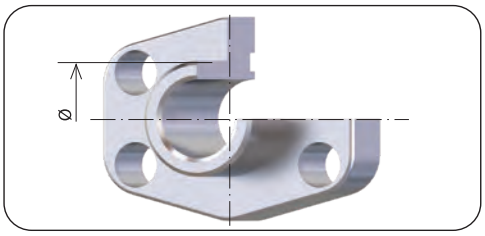

Ref: ZBMSM

Contrabrida macho soldable tubo métrico

Male welding counterflange for metric tube
Contre-bride à souder mâle tube métrique
Controflangia a saldare maschio tubo metrico

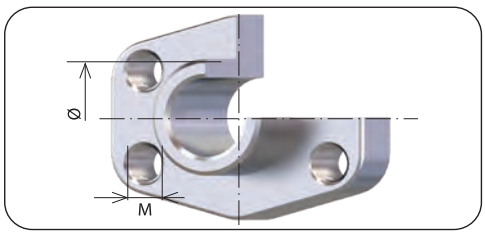

Ref: ZBCMSM

***Consultar** / On request/ **Sur demande** / Su richiesta

BRIDAS SAE

SAE Flanges
Brides SAE
Flange SAE

Bridas ciegas

Blind flanges

Brides avec obturateur fermé

Flangia cieche

SERIE SERIES	TAMAÑO SIZE	Referencia Part n°	€
3000 PSI	1/2"	**ZBBC308**	**96,99**
3000 PSI	3/4"	**ZBBC312**	**118,69**
3000 PSI	1"	**ZBBC316**	**139,54**
3000 PSI	1"1/4	**ZBBC320**	**162,80**
3000 PSI	1"1/2	**ZBBC324**	**209,32**
3000 PSI	2"	**ZBBC332**	**241,89**
3000 PSI	2"1/2	**ZBBC340**	**279,11**
3000 PSI	3"	**ZBBC348**	**395,39**
3000 PSI	3"1/2	**ZBBC356**	**511,70**
3000 PSI	4"	**ZBBC364**	**604,68**
6000 PSI	1/2"	**ZBBC608**	**103,85**
6000 PSI	3/4"	**ZBBC612**	**139,54**
6000 PSI	1"	**ZBBC616**	**176,79**
6000 PSI	1"1/4	**ZBBC620**	**251,20**
6000 PSI	1"1/2	**ZBBC624**	**346,19**
6000 PSI	2"	**ZBBC632**	**509,10**

Contrabridas ciegas

Blind counter-flanges

Contre-brides avec obturateur fermé

Controflange cieche

SERIE SERIES	TAMAÑO SIZE	Referencia Part n°	€
3000 PSI	1/2"	**ZBCC308**	**102,11**
3000 PSI	3/4"	**ZBCC312**	**124,94**
3000 PSI	1"	**ZBCC316**	**153,50**
3000 PSI	1"1/4	**ZBCC320**	**179,07**
3000 PSI	1"1/2	**ZBCC324**	**230,24**
3000 PSI	2"	**ZBCC332**	**266,08**
3000 PSI	3"	**ZBCC348**	**434,95**
3000 PSI	3"1/2	**ZBCC356**	**562,88**
3000 PSI	4"	**ZBCC364**	**665,16**
6000 PSI	1/2"	**ZBCC608**	**126,13**
6000 PSI	3/4"	**ZBCC612**	**153,50**
6000 PSI	1"	**ZBCC616**	**194,44**
6000 PSI	1"1/4	**ZBCC620**	**241,93**
6000 PSI	1"1/2	**ZBCC624**	**434,95**
6000 PSI	2"	**ZBCC632**	**639,59**

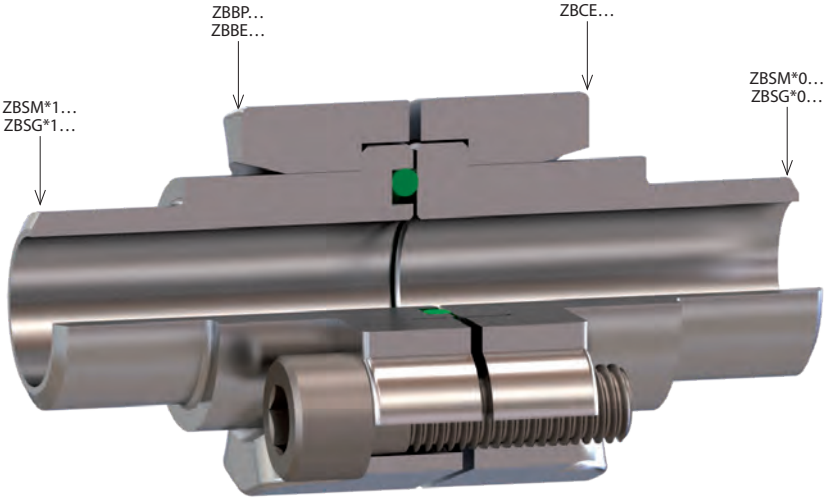

BRIDAS SAE

SAE Flanges
Brides SAE
Flange SAE

Brida cono soldable tubo métrico

Flange welding adaptor for metric tube

Bride collet à souder tube métrique

Adattatore a saldare per tubo Metrico con o'ring

SERIE SERIES	Ø EXT. Ø OUTER	TAMAÑO SIZE	Referencia Part n°	€
3000 PSI	16	1/2"	**ZBSM3108016**	**88,40**
3000 PSI	25	3/4"	**ZBSM3112025**	**106,08**
3000 PSI	30	1"	**ZBSM3116030**	**132,56**
3000 PSI	38	1"1/4	**ZBSM3120038**	**159,08**
3000 PSI	45	1"1/2	**ZBSM3124045**	**220,96**
3000 PSI	60	2"	**ZBSM3132060**	**265,16**
3000 PSI	70	2"1/2	**ZBSM3140070**	**353,52**
3000 PSI	80	3"	**ZBSM3148080**	**618,64**
3000 PSI	100	3"1/2	**ZBSM3156100**	**883,80**
3000 PSI	114.3	4"	**ZBSM3164114**	**1.060,56**
6000 PSI	16	1/2"	**ZBSM6108016**	**88,40**
6000 PSI	25	3/4"	**ZBSM6112025**	**132,56**
6000 PSI	30	1"	**ZBSM6116030**	**145,82**
6000 PSI	38	1"1/4	**ZBSM6120038**	**156,44**
6000 PSI	45	1"1/2	**ZBSM6124045**	**243,02**
6000 PSI	60	2"	**ZBSM6132060**	**291,64**

Contrabrida cono soldable tubo métrico

Counter-flange welding adaptor for metric tube

Contre-bride collet à souder tube métrique

Adattatore a saldare per tubo Metrico senza o'ring

SERIE SERIES	Ø EXT. Ø OUTER	TAMAÑO SIZE	Referencia Part n°	€
3000 PSI	16	1/2"	**ZBSM3008016**	**81,47**
3000 PSI	25	3/4"	**ZBSM3012025**	**97,76**
3000 PSI	30	1"	**ZBSM3016030**	**122,17**
3000 PSI	38	1"1/4	**ZBSM3020038**	**159,08**
3000 PSI	45	1"1/2	**ZBSM3024045**	**203,64**
3000 PSI	60	2"	**ZBSM3032060**	**244,38**
3000 PSI	70	2"1/2	**ZBSM3040070**	**325,81**
3000 PSI	80	3"	**ZBSM3048080**	**570,19**
3000 PSI	100	3"1/2	**ZBSM3056100**	**814,57**
3000 PSI	114.3	4"	**ZBSM3064114**	**977,48**
6000 PSI	16	1/2"	**ZBSM6008016**	**81,47**
6000 PSI	25	3/4"	**ZBSM6012025**	**122,17**
6000 PSI	30	1"	**ZBSM6016030**	**134,41**
6000 PSI	38	1"1/4	**ZBSM6020038**	**156,44**
6000 PSI	45	1"1/2	**ZBSM6024045**	**224,00**
6000 PSI	60	2"	**ZBSM6032060**	**268,79**

Brida cono soldable tubo gas

Flange welding adaptor for gas tube

Bride collet à souder tube gaz

Adattatore a saldare per tubo gas con o'ring

SERIE SERIES	Ø INT. Ø INNER	TAMAÑO SIZE	Referencia Part n°	€
3000 PSI	21.5	1/2"	**ZBSG3108215**	**81,47**
3000 PSI	28.0	3/4"	**ZBSG3112280**	**97,76**
3000 PSI	34.0	1"	**ZBSG3116340**	**122,17**
3000 PSI	42.8	1"1/4	**ZBSG3120428**	**159,08**
3000 PSI	48.6	1"1/2	**ZBSG3124486**	**203,64**
3000 PSI	61.0	2"	**ZBSG3132610**	**244,38**
6000 PSI	21.5	1/2"	**ZBSG6108215**	**81,47**
6000 PSI	28.0	3/4"	**ZBSG6112280**	**122,17**
6000 PSI	34.0	1"	**ZBSG6116340**	**134,41**
6000 PSI	42.8	1"1/4	**ZBSG6120428**	**156,44**
6000 PSI	48.6	1"1/2	**ZBSG6124486**	**224,00**
6000 PSI	61.0	2"	**ZBSG6132610**	**268,79**

Contrabrida cono soldable tubo gas

Counter-flange welding adaptor for gas tube

Contre-bride collet à souder tube gaz

Adattatore a saldare per tubo gas senza o'ring

SERIE SERIES	Ø INT. Ø INNER	TAMAÑO SIZE	Referencia Part n°	€
3000 PSI	21.5	1/2"	**ZBSG3008215**	**122,27**
3000 PSI	28.0	3/4"	**ZBSG3012280**	**97,76**
3000 PSI	34.0	1"	**ZBSG3016340**	**122,17**
3000 PSI	42.8	1"1/4	**ZBSG3020428**	**146,63**
3000 PSI	48.6	1"1/2	**ZBSG3024486**	**203,64**
3000 PSI	61.0	2"	**ZBSG3032610**	**244,38**
6000 PSI	21.5	1/2"	**ZBSG6008215**	**81,47**
6000 PSI	28.0	3/4"	**ZBSG6012280**	**122,17**
6000 PSI	34.0	1"	**ZBSG6016340**	**134,41**
6000 PSI	42.8	1"1/4	**ZBSG6020428**	**156,44**
6000 PSI	48.6	1"1/2	**ZBSG6024486**	**224,00**
6000 PSI	61.0	2"	**ZBSG6032610**	**268,79**

Cabeza brida soldable SW tubo métrico

Welding flange head SW metric tube

Tête de bride de soudage SW tube métrique

Flangia a saldare testa tubo metrico SW

SERIE SERIES	TUBO PIPE	TAMAÑO	Referencia Part n°	€
3000 PSI	14	1/2"	**ZBSWM3108014**	**14,42**
3000 PSI	22	3/4"	**ZBSWM3112022**	**22,23**
3000 PSI	35	1"1/4	**ZBSWM3120035**	**44,23**
3000 PSI	39	1"1/2	**ZBSWM3124039**	**50,41**
3000 PSI	50	2"	**ZBSWM3132050**	**71,40**
6000 PSI	22	3/4"	**ZBSWM6112022**	**24,46**
6000 PSI	28	1"	**ZBSWM6116028**	**42,72**
6000 PSI	35	1"1/4	**ZBSWM6120035**	**48,64**
6000 PSI	39	1"1/2	**ZBSWM6124039**	**55,46**

Hasta fin de existencias / *Until end of stock* / Jusqu´à la fin du stock / *Fino ad esaurimento*

BRIDAS SAE

SAE Flanges
Brides SAE
Flange SAE

Tornillos para bridas SAE

Screws for SAE flanges

Vis pour brides SAE

Vite per flangia SAE

ROSCA THREAD	TAMAÑO SIZE	Referencia Part n°	€
M8X30	3000-6000 PSI 1/2"	**ZTB8X30**	**1,43**
M10X35	3000 PSI 3/4"-1"	**ZTB10X35**	**2,05**
M10X40	3000 PSI 1" 1/4 - 6000 PSI 3/4"	**ZTB10X40**	**2,02**
M12X45	3000 PSI 1"1/2-2"-2"1/2-6000 PSI 1"	**ZTB12X45**	**3,84**
M14X45	6000 PSI 1"1/4	**ZTB14X45**	**6,52**
M16X50	3000 PSI 3"-3"1/2"-4"- 6000 PSI 1" 1/2	**ZTB16X50**	**9,98**
M20X70	6000 PSI 2"	**ZTB20X70**	**22,16**

Juntas para bridas SAE 3000/6000 PSI

Seals for 3000/6000 PSI flange

Joints pour bride série 3000/6000

Guarnizioni per flangia SAE 3000/6000 PSI

TAMAÑO SIZE	Ø INT. Ø INNER	Ø EXT. Ø OUTER	Referencia Part n°	€
1/2"	17.02	25.40	**JBR08**	*
3/4"	23.36	31.72	**JBR12**	*
1"	31.24	39.62	**JBR16**	*
1"1/4	36.07	44.45	**JBR20**	*
1"1/2	45.34	53.98	**JBR24**	*
2"	54.86	63.50	**JBR32**	*

***Ver precios en Conducciones Hidráulicas y Neumáticas** / **See prices in Hydraulic and Pneumatic Connectors' Catalogue* / *Voir prix dans le Catalogue Connectique Hydraulique et Pneumatique / **Vedere prezzi nel listino Condutture Idrauliche e Pneumatiche*

Juntas tóricas para bridas SAE 3000/6000 PSI

O'rings for 3000/6000 PSI SAE flanges

O'rings pour bride série 3000/6000 PSI

O'rings per flangia SAE 3000/6000 PSI

TAMAÑO SIZE	Ø INT. Ø INNER	Referencia Part n°	€
1/2"	18.64	**18.64X3.53**	*
3/4"	24.99	**24.99X3.53**	*
1"	32.92	**32.92X3.53**	*
1"1/4	37.70	**37.70X3.53**	*
1"1/2	47.22	**47.22X3.53**	*
2"	56.74	**56.74X3.53**	*

***Ver precios en Conducciones Hidráulicas y Neumáticas** / **See prices in Hydraulic and Pneumatic Connectors' Catalogue* / *Voir prix dans le Catalogue Connectique Hydraulique et Pneumatique / **Vedere prezzi nel listino Condutture Idrauliche e Pneumatiche*

***Consultar** / On request / **Sur demande** / Su richiesta

ABRAZADERAS TRΔLE

TrΔle Clamps
Colliers TrΔle
Collari fissatubo TrΔle

Abrazadera ligera simple completa

Light serie simple clamp

Collier de fixation simple complet, série légère

Collari fissatubo singoli completo

DN	GRUPO GROUP	Referencia Part n°	€
6	1	ZA40AZ06	12,11
8	1	ZA40AZ08	12,11
10	1	ZA40AZ10	12,11
12	1	ZA40AZ12	12,11
14	2	ZA40AZ14	12,78
15	2	ZA40AZ15	12,78
16	2	ZA40AZ16	12,78
18	2	ZA40AZ18	12,78
20	3	ZA40AZ20	13,66
22	3	ZA40AZ22	13,66
23	3	ZA40AZ23	13,66
25	3	ZA40AZ25	13,66
28	4	ZA40AZ28	15,08
30	4	ZA40AZ30	15,08
38	5	ZA40AZ38	17,41
40	5	ZA40AZ40	17,41
42	5	ZA40AZ42	17,41

Abrazadera ligera simple completa, plásticos perfil liso

Light serie simple clamp, plastic smooth profile

Collier de fixation simple série légère, complet, plastic profil lisse

Collari fissatubo singoli completo, profilo liscio di plastica

DN	GRUPO GROUP	Referencia Part n°	€
8	1	ZA40AZ08PL	12,11
10	1	ZA40AZ10PL	12,11
12	1	ZA40AZ12PL	12,11
1/4"	2	ZA40AZ13.2PL	12,78
15	2	ZA40AZ15PL	12,78
3/8"	2	ZA40AZ16.7PL	12,78
18	2	ZA40AZ18PL	12,78
20	3	ZA40AZ20PL	13,66
1/2"	3	ZA40AZ21.3PL	13,66
22	3	ZA40AZ22PL	13,66
25	3	ZA40AZ25PL	13,66
3/4"	4	ZA40AZ26.7PL	15,08
28	4	ZA40AZ28PL	15,08
30	4	ZA40AZ30PL	15,08
1"	5	ZA40AZ33.3PL	17,41
35	5	ZA40AZ35PL	17,41
38	5	ZA40AZ38PL	17,41
42	5	ZA40AZ42PL	17,41

Abrazadera ligera reforzada completa

Light serie reinforced clamp

Collier de fixation simple série légère renforcé complet

Collare fissatubo rinforzato completo

DN	GRUPO GROUP		Referencia Part n°	€
6	1		ZA41AZ06	15,39
8	1		ZA41AZ08	15,39
10	1		ZA41AZ10	15,39
12	1		ZA41AZ12	15,39
1/4"	2	NEW	ZA41AZ13.2	16,43
14	2		ZA41AZ14	16,43
15	2		ZA41AZ15	16,43
16	2		ZA41AZ16	16,43
18	2		ZA41AZ18	16,43
20	3		ZA41AZ20	17,82
22	3		ZA41AZ22	17,82
23	3		ZA41AZ23	17,82
25	3		ZA41AZ25	17,82
28	4		ZA41AZ28	19,18
30	4		ZA41AZ30	19,18
38	5		ZA41AZ38	22,67
40	5		ZA41AZ40	22,67
42	5		ZA41AZ42	22,67

Abrazadera ligera reforzada completa, plásticos perfil liso

Light serie reinforced clamp, plastic smooth profile

Collier de fixation simple série légère renforcé, complet, plastic profil lisse

Collare fissatubo rinforzato completo, profilo liscio di plastica

DN	GRUPO GROUP	Referencia Part n°	€
8	1	ZA41AZ08PL	15,39
10	1	ZA41AZ10PL	15,39
12	1	ZA41AZ12PL	15,39
1/4"	2	ZA41AZ13.2PL	16,43
15	2	ZA41AZ15PL	16,43
3/8"	2	ZA41AZ16.7PL	16,43
18	2	ZA41AZ18PL	16,43
20	3	ZA41AZ20PL	17,82
1/2"	3	ZA41AZ21.3PL	17,82
22	3	ZA41AZ22PL	17,82
25	3	ZA41AZ25PL	17,82
3/4"	4	ZA41AZ26.7PL	19,18
28	4	ZA41AZ28PL	19,18
30	4	ZA41AZ30PL	19,18
1"	5	ZA41AZ33.3PL	22,67
35	5	ZA41AZ35PL	22,67
38	5	ZA41AZ38PL	22,67
42	5	ZA41AZ42PL	22,67

ABRAZADERAS TRALE

TrAle Clamps
Colliers TrAle
Collari fissatubo TrAle

Plásticos polipropileno, serie ligera

Plastics polypropylene simple, light series

Plastique polypropylene, série légère

Plastica polipropilene serie leggera

DN	GRUPO GROUP	Referencia Part n°	€
6	1	A106C	0,62
8	1	A108C	0,62
10	1	A110C	0,62
12	1	A112C	0,62
1/4"	2	A213.2C	0,64
14	2	A214C	0,64
15	2	A215C	0,64
3/8"	2	A216.7C	0,65
16	2	A216C	0,64
18	2	A218C	0,64
19	3	A319C	0,84
20	3	A320C	0,84
1/2"	3	A321.3C	0,84
22	3	A322C	0,84
23	3	A323C	0,84
25	3	A325C	0,84
3/4"	4	A426.7C	1,01
28	4	A428C	1,01
30	4	A430C	1,01
32	5	A532C	1,53
1"	5	A533.7C	1,53
35	5	A535C	1,53
38	5	A538C	1,53
40	5	A540C	1,53
42	5	A542C	1,53
44.5	6	A644.5C	2,34
1"1/2	6	A648.3C	2,34
50.8	6	A650.8C	2,34

Precio por pareja / *Price per couple* / Prix par paire / *Prezzo per coppia*

Chapas inferiores, serie ligera

Lower plate, light serie

Plaque inférieure, série légère

Piastre inferiori

GRUPO GROUP	Referencia Part n°	€
1	ZAPIN1	9,55
2	ZAPIN2	9,92
3	ZAPIN3	10,35
4	ZAPIN4	10,78
5	ZAPIN5	11,52
6	ZAPIN6	14,36

Chapas superiores, serie ligera

Upper plate, light serie

Plaque supérieure, série légère

Piastre superiore

GRUPO GROUP	Referencia Part n°	€
1	ZAPS1	2,98
2	ZAPS2	3,30
3	ZAPS3	3,73
4	ZAPS4	4,26
5	ZAPS5	4,95
6	ZAPS6	5,70

Tornillos Allen, serie ligera

Allen screw, light serie

Vis Allen, série légère

Vite Allen

ROSCA THREAD	GRUPO GROUP	Referencia Part n°	€
M6	1	ZAVTC1	1,07
M6	2	ZAVTC2	0,50
M6	3	ZAVTC3	1,34
M6	4	ZAVTC4	1,75
M6	5	ZAVTC5	2,26
M6	6	ZAVTC6	2,79

Precio por unidad / *Price per unit* / Prix à l'unité / *Prezzo unitario*

Tornillos Hexagonales, serie ligera

Hexagonal screw, light serie

Vis Hexagonnel, série légère

Vite esagonale

ROSCA THREAD	GRUPO GROUP	Referencia Part n°	€
M6	1	ZAVTE1	1,07
M6	2	ZAVTE2	1,21
M6	3	ZAVTE3	1,48
M6	4	ZAVTE4	1,57
M6	5	ZAVTE5	2,32
M6	6	ZAVTE6	3,36

Precio por unidad / *Price per unit* / Prix à l'unité / *Prezzo unitario*

Chapas para apilar abrazaderas, serie ligera

Plates to pile up clamps, light serie

Plaques pour empiler colliers, série légère

Piastre componibili. Serie leggera

GRUPO GROUP	Referencia Part n°	€
1	ZAPA1	1,38
2	ZAPA2	1,65
4	ZAPA4	2,13
5	ZAPA5	2,41
3	ZAPA3	1,89
6	ZAPA6	3,38

ABRAZADERAS TRALE

TrAle Clamps
Colliers TrAle
Collari fissatubo TrAle

Chapa Atornillar, Serie ligera

NEW

Elongated Weld Plate Light Series

Plaque à souder allongée, série légère

Piastra Di Saldatura Allungata Serie Leggera

GRUPO GROUP	Referencia Part n°	€
1	ZAPT1	6,92
2	ZAPT2	7,30
3	ZAPT3	7,47
4	ZAPT4	7,81
5	ZAPT5	8,15

TRALE®

ABRAZADERAS | CLAMPS

UNE TUS SISTEMAS DE TUBERÍA DE FORMA SEGURA

JOIN PIPE SYSTEMS SECURELY

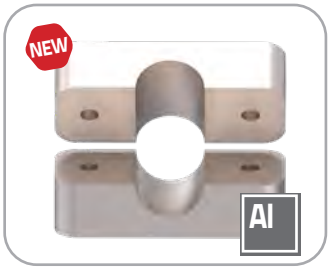

CONSULTA EL CATÁLOGO DE CONDUCCIONES

CHECK OUR CONNECTORS CATALOGUE

ABRAZADERAS TRALE

TrAle Clamps
Colliers TrAle
Collari fissatubo TrAle

Abrazaderas dobles completas

Double clamp - parallel

Colliers de fixation doubles complets

Collare fissatubo doppio completo

DN	GRUPO GROUP	Referencia Part n°	€
6	1	ZAZCFS06	11,25
8	1	ZAZCFS08	11,25
10	1	ZAZCFS10	11,25
12	1	ZAZCFS12	11,25
14	2	ZAZCFS14	22,23
15	2	ZAZCFS15	22,23
16	2	ZAZCFS16	22,23
18	2	ZAZCFS18	22,23
20	3	ZAZCFS20	23,95
22	3	ZAZCFS22	23,95
25	3	ZAZCFS25	23,95
28	4	ZAZCFS28	29,16
30	4	ZAZCFS30	29,16
35	5	ZAZCFS35	34,62
38	5	ZAZCFS38	34,62
40	5	ZAZCFS40	34,62
42	5	ZAZCFS42	34,62

Chapas inferiores

Double Lower plate

Plaques inférieures à souder double

Piastre inferiori

ROSCA THREAD	GRUPO GROUP	Referencia Part n°	€
M6	1	ZADPIN1	6,23
M8	2	ZADPIN2	14,24
M8	3	ZADPIN3	15,16
M8	4	ZADPIN4	16,20
M8	5	ZADPIN5	17,91

Chapas superiores

Double Upper plate

Plaques supérieures de protection double

Piastre superiori

GRUPO GROUP	Referencia Part n°	€
1	ZADPS1	3,21
2	ZADPS2	4,95
3	ZADPS3	5,49
4	ZADPS4	9,35
5	ZADPS5	11,46

Plásticos polipropileno dobles

Double plastics polypropylene

Double plastiques polypropylene

Plastica polipropilene

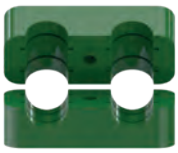

DN	GRUPO GROUP	Referencia Part n°	€
6	1	AD106C	0,69
8	1	AD108C	0,69
10	1	AD110C	0,69
12	1	AD112C	0,69
1/4"	2	AD213.2C	0,80
14	2	AD214C	0,80
15	2	AD215C	0,80
3/8"	2	AD216.7C	0,80
16	2	AD216C	0,80
18	2	AD218C	0,80
19	3	AD319C	0,97
20	3	AD320C	0,97
1/2"	3	AD321.3C	0,97
22	3	AD322C	0,97
25	3	AD325C	0,97
3/4"	4	AD426.7C	1,22
28	4	AD428C	1,22
30	4	AD430C	1,22
32	5	AD532C	1,89
1"	5	AD533.3C	1,89
35	5	AD535C	1,89
38	5	AD538C	1,89
40	5	AD540C	1,89
42	5	AD542C	1,89

Precio por pareja / *Price per couple* / Prix par paire / *Prezzo per coppia*

Tornillos cabeza hexagonal

Hexagonal screw

Vis hexagonale

Vite esagonale

ROSCA THREAD	GRUPO GROUP	Referencia Part n°	€
M6	1	ZADVTE1	1,34
M8	2	ZADVTE2	2,67
M8	3	ZADVTE3	2,76
M8	4	ZADVTE4	2,85
M8	5	ZADVTE5	3,81

Precio por unidad / *Price per unit* / Prix à l'unité / *Prezzo unitario*

ABRAZADERAS TRΔLE

TrΔle Clamps
Colliers TrΔle
Collari fissatubo TrΔle

Abrazaderas Inox Serie pesada completas

NEW

Heavy Series Stainless Steel Clamps

Pinces en acier inoxydable série lourde

Collare Singolo Completo Serie Pesante

DN	GRUPO GROUP	Referencia Part n°	€
6	1	ZAZCPS06	45,53
8	1	ZAZCPS08	45,53
10	1	ZAZCPS10	45,53
12	1	ZAZCPS12	45,53
1/4"	1	ZAZCPS13.2	45,53
14	1	ZAZCPS14	45,53
15	1	ZAZCPS15	45,53
16	1	ZAZCPS16	45,53
3/8"	1	ZAZCPS17.2	45,53
18	1	ZAZCPS18	45,53
20	2	ZAZCPS20	55,19
1/2"	2	ZAZCPS21.3	55,19
22	2	ZAZCPS22	55,19
25	2	ZAZCPS25	55,19
3/4"	2	ZAZCPS26.7	55,19
28	2	ZAZCPS28	55,19
30	2	ZAZCPS30	55,19
32	3	ZAZCPS32	68,99
1"	3	ZAZCPS33.3	68,99
35	3	ZAZCPS35	68,99
38	3	ZAZCPS38	68,99
40	3	ZAZCPS40	68,99
42 - 1" 1/4	3	ZAZCPS42	68,99
45	4	ZAZCPS45	137,98
48-1" 1/2	4	ZAZCPS48	137,98
50	4	ZAZCPS50	137,98
55	4	ZAZCPS55	137,98
2"	4	ZAZCPS60.3	137,98
65	4	ZAZCPS65	137,98
70	4	ZAZCPS70	137,98

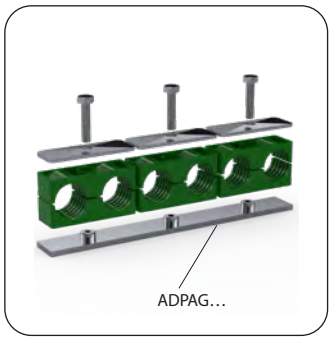

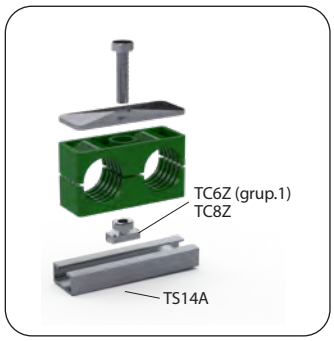

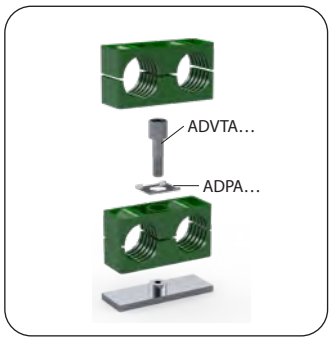

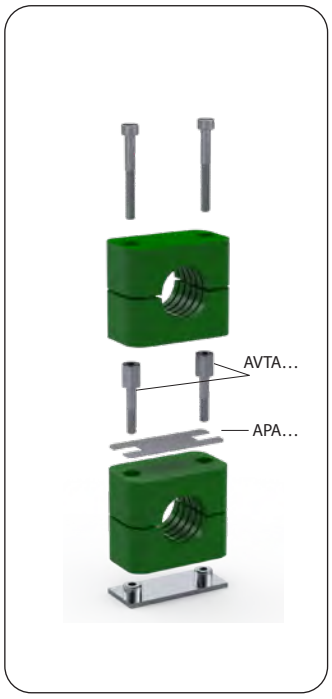

ABRAZADERAS TRALE

TrAle Clamps
Colliers TrAle
Collari fissatubo TrAle

Plásticos polipropileno, serie pesada

Plastics polypropylene, heavy series

Plastique polypropylene, série lourde

Plastica polipropilene, serie pesante

DN	GRUPO GROUP	Referencia Part n°	€
6	1	AMPP106C	1,66
8	1	AMPP108C	1,66
10	1	AMPP110C	1,66
12	1	AMPP112C	1,66
1/4"	1	AMPP113.2C	1,66
14	1	AMPP114C	1,66
15	1	AMPP115C	1,66
16	1	AMPP116C	1,66
3/8"	1	AMPP117.2C	1,66
18	1	AMPP118C	1,66
20	2	AMPP220C	1,80
1/2"	2	AMPP221.3C	1,80
22	2	AMPP222C	1,80
25	2	AMPP225C	1,80
3/4"	2	AMPP226.7C	1,80
28	2	AMPP228C	1,80
30	2	AMPP230C	1,80
30	3	AMPP330C	2,56
32	3	AMPP332C	2,56
1"	3	AMPP333.3C	2,56
35	3	AMPP335C	2,56
38	3	AMPP338C	2,56
40	3	AMPP340C	2,56
42	3	AMPP342C	2,56
38	4	AMPP438C	7,27
42- 1" 1/4	4	AMPP442C	7,27
45	4	AMPP445C	7,27
48-1" 1/2	4	AMPP448C	7,27
50	4	AMPP450C	7,27
55	4	AMPP455C	7,27
2"	4	AMPP460.3C	7,27
65	4	AMPP465C	7,27
70	4	AMPP470C	7,27

Precio por pareja / *Price per couple* / Prix par paire / *Prezzo per coppia*

Chapas inferiores, serie pesada

Lower plate, heavy serie

Plaque inférieure, série lourde

Piastre inferiori, serie pesante

ROSCA THREAD	GRUPO GROUP	Referencia Part n°	€
M10	1	ZAPINP1	35,54
M10	2	ZAPINP2	46,85
M10	3	ZAPINP3	58,14
M12	4	ZAPINP4	88,59

Chapas superiores, serie pesada

Upper plate, heavy serie

Plaque supérieure, série lourde

Piastre superiori, serie pesante

GRUPO GROUP	Referencia Part n°	€
1	ZAPSP1	16,26
2	ZAPSP2	18,42
3	ZAPSP3	24,11
4	ZAPSP4	55,15

Tornillos, serie pesada

Screw, heavy serie

Vis, série lourde

Vite, serie pesante

ROSCA THREAD	GRUPO GROUP	Referencia Part n°	€
M10	1	ZAVTEP1	4,21
M10	2	ZAVTEP2	5,00
M10	3	ZAVTEP3	5,72
M12	4	ZAVTEP4	12,08

Precio por unidad / *Price per unit* / Prix à l'unité / *Prezzo unitario*

Accesorios para carril

Rail accessories

Accessoires pour rail

Accessori per lane

ROSCA THREAD	DETALLE DESCRIPTION		Referencia Part n°	€
M6	NUT		TC6I	11,45
M8	NUT		TC8I	15,97
--	RAIL		TS11I	66,68
M10	NUT	NEW	TC10I	17,57
--	RAIL		TS14I	73,73

DICSA
e·digital

SISTEMA LOGÍSTICO INTELIGENTE. OPTIMIZAMOS TUS ENVÍOS

Cada día más cerca de ti. Compañía global.

www.dicsaes.com

Closer to you everyday. Wordwide company

SMART LOGISTICS SYSTEM. WE OPTIMIZE DELIVERY OPERATIONS

ADAPTADORES BSP 175
BSP Adaptors
Adapteurs BSP
Adattatori BSP

ADAPTADORES NPT 184
NPT Adaptors
Adapteurs NPT
Adattatori NPT

ADAPTADORES O'RING BOSS 188
O'Ring Boss Adaptors
Adapteurs O'Ring Boss
Adattatori O'Ring Boss

ADAPTADORES ORFS 190
ORFS Adaptors
Adapteurs ORFS
Adattatori ORFS

04

ADAPTADORES

Adaptors
Adapteurs
Adattatori

ADAPTADORES BSP

BSP Adaptors
Adapteurs BSP
Adattatori BSP

Uniones rectas macho ▪ Straight male adaptors ▪ Unions mâle ▪ Adattatori diritti maschio | 175

Uniones rectas macho-hembra ▪ Adaptors male-female ▪ Unions mâle-femelle ▪ Adattatori diritti maschio-femmina | 176

Tapones ▪ Plugs ▪ Bouchons ▪ Tappi | 178

Uniones hembra y pasatabiques ▪ Female adaptors and bulkheads ▪ Unions femelle et passe-cloison ▪ Raccordi femmina e passaparete | 179

Orientables ▪ Banjos ▪ Adapteurs orientables ▪ Bulloni forati | 180

Juntas metal FKM ▪ Joints ▪ Bague BS ▪ Rondelle Bonded | 180

Codos accesoriales ▪ Elbows ▪ Adapteurs coude accessoriel ▪ Adattatori a 90° e 45° tubolari | 181

Codos en forja ▪ Forging elbows ▪ Adapteurs coude en forge ▪ Adattatori a 90° e 45° forgiati | 182

ADAPTADORES BSP

BSP Adaptors
Adapteurs BSP
Adattatori BSP

Te y cruces en forja ▪ Forging Tees and croos ▪ Adapteurs Tés en forge et des croix ▪ Adattatori a T forgiati e croce

183

Z1220

Z1222

Z1224

Z1228

Z1226

Z1221

Z1223

Z1227

ADAPTADORES NPT

NPT Adaptors
Adapteurs NPT
Adattatori NPT

Uniones rectas macho-macho ▪ Straight male adaptors ▪ Unions mâle ▪ Adattatori diritti maschio - maschio | 184

Z1015

ZN1015

Uniones rectas macho-hembra ▪ Adaptors male-female ▪ Unions mâle-femelle ▪ Adattatori diritti maschio - femmina | 184

ZN1060

ZN1150

ZN1170

ZN1174

Tapones ▪ Plugs ▪ Bouchons ▪ Tappi | 185

ZN1072

ZN1070

ZN1071

Uniones hembra y pasatabiques ▪ Female adaptors and bulkheads ▪ Unions femelle et passe cloisson ▪ Adattatori femmina e passaparete | 185

ZN1031

Codos en forja ▪ Forging elbows ▪ Adapteurs coude en forge ▪ Adattatori a 90° e 45° forgiati | 186

ZN1190

ZN1193

ZN1196

ZN1198

ZN1396

ZN1393

Tes en forja ▪ Forging tees ▪ Adapteurs Té en forge ▪ Adattatori a T forgiati | 187

ZN1220

ZN1226

ADAPTADORES O'RING BOSS

O'Ring Boss Adaptors
Adapteurs O'Ring Boss
Adattatori O'Ring Boss

Uniones rectas macho ▪ Straight male adaptors ▪ Unions mâle ▪ Unione diritta maschio | 188

ZS6464

ZS220

ZS3474

ZS6401

Uniones rectas macho-hembra ▪ Adaptors male-female ▪ Unions mâle-femelle ▪ Unione diritta maschio-femmina | 188

ZS380

ZS6405

Tapones ▪ Plugs ▪ Bouchons ▪ Tappi | 188

ZS6408

ZS6409

Codos en forja ▪ Forging elbows and tees ▪ Adapteurs coude et té en forge ▪ Curve e T forgiati | 189

ZS575

Tes en forja ▪ Forging Tees ▪ Adapteurs Té en forge ▪ Adattatori a T forgiati | 189

ZS6803

ZS6804

ADAPTADORES ORFS

ORFS Adaptors
Adapteurs ORFS
Adattatori ORFS

Conos y tuercas ORFS ▪ ORFS Nuts and nipples ▪ Écrous et collets ORFS ▪ Dado e Ogive | 190

ZOR102 ZOR1273

Tapones ▪ Plugs ▪ Bouchons ▪ Tappi | 190

ZOR104 ZOR105

Uniones rectas ORFS ▪ ORFS Straight unions ▪ Unions droites ORFS ▪ Adattatori diritti ORFS | 190

ZOR200 ZOR202 ZOR1017 ZOR106 ZOR301 ZOR204 ZOR302 ZOR305

Codos en forja ORFS ▪ ORFS Elbows ▪ Coudes ORFS ▪ Adattatori a 90° ORFS | 192

ZOR405 ZOR600

Tes en forja ORFS ▪ ORFS Tees ▪ Tés ORFS ▪ Adattatori a T ORFS | 192

ZOR700 ZOR701 ZOR702 JVORFS

ADAPTADORES BSP

BSP Adaptors
Adapteurs BSP
Adattatori BSP

Adaptador macho - macho BSP cono 60°

Adaptor male BSP 60° - male BSP 60°

Adapteur mâle BSP - mâle BSP cone 60°

Niples di giunzione BSP 60°

ROSCA THREAD			Referencia Part n°	€
1/8" BSP	1/8" BSP		Z101002	8,38
1/4" BSP	1/4" BSP		Z101004	8,33
1/4" BSP	1/4" BSP		Z101004H19	10,77
3/8" BSP	3/8" BSP		Z101006	9,81
1/2" BSP	1/2" BSP		Z101008	13,38
5/8" BSP	5/8" BSP		Z101010	29,13
3/4" BSP	3/4" BSP		Z101012	20,04
1" BSP	1" BSP		Z101016	38,87
1"1/4 BSP	1"1/4 BSP		Z101020	59,28
1"1/2 BSP	1"1/2 BSP		Z101024	70,55
2" BSP	2" BSP		Z101032	108,60
2" BSP	2" BSP		Z101032H70	145,54
2"1/2 BSP	2"1/2 BSP	NEW	Z101040	185,89
3" BSP	3" BSP	NEW	Z101048	317,41

Adaptador macho - macho BSP cono 60° con junta encastrada NEW

Adaptor male BSP 60° - male BSP 60° captive seal

Adapteur mâle BSP - mâle BSP cone 60° avec joint plat

Niples di giunzione BSP 60° con guarnizione

ROSCA THREAD		Referencia Part n°
1/4" BSP	1/4" BSP	Z101004WD
3/8" BSP	3/8" BSP	Z101006WD
1/2" BSP	1/2" BSP	Z101008WD
3/4" BSP	3/4" BSP	Z101012WD
1" BSP	1" BSP	Z101016WD

Adaptador macho - macho BSP asiento plano

Adaptor male BSP - male BSP flat seat

Adapteur mâle BSP - mâle BSP fond plat

Niples di giunzione BSP sede piana

ROSCA THREAD		Referencia Part n°	€
1/4" BSP	1/4" BSP	Z101104	12,07
3/8" BSP	3/8" BSP	Z101106	14,72
1/2" BSP	1/2" BSP	Z101108	17,42
3/4" BSP	3/4" BSP	Z101112	21,20
1" BSP	1" BSP	Z101116	43,53
1"1/4 BSP	1"1/4 BSP	Z101120	69,70
1"1/2 BSP	1"1/2 BSP	Z101124	76,92
2" BSP	2" BSP	Z101132	117,46

Reductor macho - macho BSP cono 60°

Reducer male adaptor BSP 60° - male BSP 60°

Réduction mâle BSP - mâle BSP cone 60°

Niples di riduzione BSP 60°

ROSCA THREAD			Referencia Part n°	€
1/8" BSP	1/4" BSP		Z10200204	8,51
1/8" BSP	1/4" BSP		Z10200204H19	11,47
1/8" BSP	3/8" BSP		Z10200206	15,65
1/4" BSP	3/8" BSP		Z10200406	10,67
1/4" BSP	1/2" BSP		Z10200408	14,93
1/4" BSP	3/4" BSP		Z10200412	23,63
3/8" BSP	1/2" BSP		Z10200608	14,78
3/8" BSP	3/4" BSP		Z10200612	24,86
1/2" BSP	3/4" BSP		Z10200812	20,76
1/2" BSP	1" BSP		Z10200816	38,33
5/8" BSP	1/2" BSP		Z10201008	34,65
5/8" BSP	3/4" BSP		Z10201012	38,19
3/4" BSP	1" BSP		Z10201216	39,66
3/4" BSP	1"1/4 BSP		Z10201220	61,13
1" BSP	1"1/4 BSP		Z10201620	59,33
1" BSP	1"1/2 BSP		Z10201624	78,50
1"1/4 BSP	1"1/2 BSP		Z10202024	75,47
1"1/4 BSP	2" BSP		Z10202032	124,65
1"1/2 BSP	2" BSP		Z10202432	118,77
1"1/2 BSP	2" BSP		Z10202432H70	150,68
2" BSP	2" 1/2 BSP	NEW	Z10203240	199,69
2" BSP	3" BSP	NEW	Z10203248	315,71
2"1/2 BSP	3" BSP	NEW	Z10204048	313,90

Reductor macho - macho BSP cono 60° con junta encastrada NEW

Reducer male adaptor BSP 60° - male BSP 60° captive seal

Réduction mâle BSP - mâle BSP cone 60° avec joint plat

Niples di riduzione BSP 60° con guarnizione

ROSCA THREAD		Referencia Part n°
1/4" BSP	3/8" BSP	Z10200406WD
1/4" BSP	3/8" BSP	Z10200408WD
3/8" BSP	1/2" BSP	Z10200608WD
1/2" BSP	3/4" BSP	Z10200812WD
3/4" BSP	1" BSP	Z10201216WD

Adaptador macho - macho BSPT

Adaptor male BSPT - male BSPT

Adapteur mâle gaz conique BSPT - mâle gaz conique BSPT

Niples di congiunzione BSPT

ROSCA THREAD		Referencia Part n°	€
1/4" BSPT	1/8" BSPT	Z10160402	14,79
1/4" BSPT	1/4" BSPT	Z10160404	10,10
3/8" BSPT	3/8" BSPT	Z10160606	13,54
1/2" BSPT	1/2" BSPT	Z10160808	14,59
3/4" BSPT	3/4" BSPT	Z10161212	21,80
1" BSPT	1" BSPT	Z10161616	45,32
1" 1/4 BSPT	1" 1/4 BSPT	Z10162020	70,73
1" 1/2 BSPT	1" 1/2 BSPT	Z10162424	97,06
2" BSPT	2" BSPT	Z10163232	134,31

ADAPTADORES BSP

BSP Adaptors
Adapteurs BSP
Adattatori BSP

Adaptador macho BSP 60° - macho NPT

Adaptor male BSP 60° - male NPT

Adapteur mâle BSP cone 60° - mâle BRIGGS (NPT)

Niples di congiunzione BSP 60° - NPT

ROSCA THREAD		Referencia Part n°	€
1/8" BSP	1/8" NPT	Z101402	10,21
1/4" BSP	1/4" NPT	Z101404	8,99
3/8" BSP	3/8" NPT	Z101406	12,34
1/2" BSP	1/2" NPT	Z101408	13,27
3/4" BSP	3/4" NPT	Z101412	20,36
1" BSP	1" NPT	Z101416	32,65
1"1/4 BSP	1"1/4 NPT	Z101420	53,99
1"1/2 BSP	1"1/2 NPT	Z101424	76,40
2" BSP	2" NPT	Z101432	113,34

Reductor macho BSP 60° - macho NPT

Reducer adaptor male BSP 60° - male NPT

Réduction mâle BSP cone 60° - mâle BRIGGS NPT

Niples di riduzione BSP 60° - NPT

ROSCA THREAD		Referencia Part n°	€
1/8" BSP	1/4" NPT	Z10240204	18,14
1/4" BSP	1/8" NPT	Z10240402	19,34
1/4" BSP	3/8" NPT	Z10240406	16,28
1/4" BSP	1/2" NPT	Z10240408	21,08
3/8"BSP	1/4"NPT	Z10240604	18,38
3/8" BSP	1/2" NPT	Z10240608	20,50
3/8" BSP	3/4" NPT	Z10240612	24,67
1/2" BSP	3/8" NPT	Z10240806	21,16
1/2" BSP	3/4" NPT	Z10240812	23,69
5/8" BSP	3/4" NPT	Z10241012	42,69
3/4" BSP	1/4" NPT	Z10241204	40,50
3/4" BSP	3/8" NPT	Z10241206	26,57
3/4" BSP	1/2" NPT	Z10241208	30,88
3/4" BSP	1" NPT	Z10241216	39,36
3/4" BSP	1" 1/4 NPT	Z10241220	80,14
3/4" BSP	1"1/2 NPT	Z10241224	84,51
1" BSP	1/2" NPT	Z10241608	38,50
1" BSP	3/4" NPT	Z10241612	37,11
1" BSP	1"1/4 NPT	Z10241620	67,99
1" 1/4 BSP	1" NPT	Z10242016	72,89
1"1/4 BSP	1"1/2 NPT	Z10242024	80,74
1" 1/2 BSP	1" 1/4 NPT	Z10242420	88,68
1"1/2 BSP	2" NPT	Z10242432	120,00
2" BSP	1" 1/2 NPT	Z10243224	115,65

Adaptador macho BSP 60° - macho BSPT

Adaptor male BSP 60° - male BSPT

Adapteur mâle BSP cone 60° - mâle gaz conique BSPT

Niples di congiunzione BSP 60° - BSPT

ROSCA THREAD		Referencia Part n°	€
1/8" BSP	1/8" BSPT	Z101202	9,44
1/4" BSP	1/4" BSPT	Z101204	8,41
3/8" BSP	3/8" BSPT	Z101206	10,70
1/2" BSP	1/2" BSPT	Z101208	13,20
3/4" BSP	3/4" BSPT	Z101212	17,97
1" BSP	1" BSPT	Z101216	38,59
1"1/4 BSP	1"1/4 BSPT	Z101220	55,78
1"1/2 BSP	1"1/2 BSPT	Z101224	74,62
2" BSP	2" BSPT	Z101232	107,61

Reductor macho BSP 60° - macho BSPT

Reducer adaptor male BSP 60° - male BSPT

Réduction mâle BSP cone 60° - mâle gaz conique BSPT

Niples di riduzione BSP 60° - BSPT

ROSCA THREAD		Referencia Part n°	€
1/8" BSP	1/4" BSPT	Z10220204	23,17
1/4" BSP	1/8" BSPT	Z10220402	16,34
1/4" BSP	3/8" BSPT	Z10220406	18,09
1/4" BSP	1/2" BSPT	Z10220408	21,01
1/4" BSP	3/4" BSPT	Z10220412	39,32
3/8" BSP	1/2" BSPT	Z10220608	13,95
3/8" BSP	3/4" BSPT	Z10220612	31,07
1/2" BSP	1/4" BSPT	Z10220804	26,10
1/2" BSP	3/8" BSPT	Z10220806	19,41
1/2" BSP	3/4" BSPT	Z10220812	25,07
1/2" BSP	1" BSPT	Z10220816	40,85
5/8" BSP	3/4" BSPT	Z10221012	23,58
3/4" BSP	1/4" BSPT	Z10221204	31,89
3/4" BSP	3/8" BSPT	Z10221206	21,62
3/4" BSP	1/2" BSPT	Z10221208	24,28
3/4" BSP	1" BSPT	Z10221216	31,03
1" BSP	3/4" BSPT	Z10221612	34,93
1" BSP	1"1/4 BSPT	Z10221620	64,91
1"1/4 BSP	1" BSPT	Z10222016	73,81
1"1/4 BSP	1"1/2 BSPT	Z10222024	78,08
1 1/2" BSP	1" 1/4 BSPT	Z10222420	83,09
1"1/2 BSP	2" BSPT	Z10222432	130,53

Prolongador macho BSP 60° - hembra fija BSP

Adaptor male BSP 60° - fixed female BSP

Prolongateur mâle BSP cone 60° - femelle gaz fixe

Prolunga maschio - femmina BSP 60°

ROSCA(M) THREAD (M)	ROSCA(H) THREAD(F)	Referencia Part n°	€
1/8" BSP	1/8" BSP	Z106002	18,18
1/4" BSP	1/4" BSP	Z106004	13,58
3/8" BSP	3/8" BSP	Z106006	14,18
1/2" BSP	1/2" BSP	Z106008	17,58
3/4" BSP	3/4" BSP	Z106012	26,79
1" BSP	1" BSP	Z106016	37,91
1"1/4 BSP	1"1/4 BSP	Z106020	83,00
1"1/2 BSP	1"1/2 BSP	Z106024	91,18
2" BSP	2" BSP	Z106032	140,73

ADAPTADORES BSP

BSP Adaptors
Adapteurs BSP
Adattatori BSP

Reductor macho BSP 60° - hembra fija BSP

Reducer adaptor male BSP 60° - fixed female BSP

Prolongateur réducteur mâle BSP cone 60° - femelle gaz

Prolunga di riduzione maschio - femmina BSP 60°

ROSCA (M) THREAD (M)	ROSCA (H) THREAD (F)		Referencia Part n°	€
1/8" BSP	1/4" BSP		Z10600204	15,93
1/8" BSP	3/8" BSP		Z10600206	24,70
1/4" BSP	1/8" BSP		Z10600402	17,43
1/4" BSP	3/8" BSP		Z10600406	22,57
1/4" BSP	1/2" BSP		Z10600408	27,41
3/8" BSP	1/4" BSP		Z10600604	18,24
3/8" BSP	1/2" BSP		Z10600608	23,48
1/2" BSP	1/4" BSP		Z10600804	25,88
1/2" BSP	3/8"BSP		Z10600806	20,93
1/2" BSP	3/4" BSP		Z10600812	26,40
1/2" BSP	1" BSP	NEW	Z10600816	52,12
3/4" BSP	3/8" BSP		Z10601206	25,73
3/4" BSP	1/2" BSP		Z10601208	22,50
3/4" BSP	1" BSP		Z10601216	45,60
1" BSP	3/4" BSP		Z10601612	46,20
1" BSP	1"1/4 BSP		Z10601620	84,49
1" BSP	1"1/2 BSP	NEW	Z10601624	115,94
1"1/4 BSP	1" BSP		Z10602016	76,18
1"1/2 BSP	1"1/4 BSP		Z10602420	92,84
1"1/2 BSP	2" BSP		Z10602432	141,73
2" BSP	1"1/2 BSP		Z10603224	138,14

Adaptador hembra giratoria - hembra giratoria BSP 60°

Adaptor BSP 60° swivel female - BSP 60° swivel female

Adapteur femelle tournante BSP 60° - femelle tournante BSP 60°

Niples femmina - femmina girevole BSP 60°

ROSCA THREAD		Referencia Part n°	€
1/4" BSP	1/4" BSP	Z117204	18,32
3/8" BSP	3/8" BSP	Z117206	22,36
1/2" BSP	1/2" BSP	Z117208	26,33
3/4" BSP	3/4" BSP	Z117212	32,84
1" BSP	1" BSP	Z117216	54,01
1" 1/4 BSP	1" 1/4 BSP	Z117220	94,59
1" 1/2 BSP	1" 1/2 BSP	Z117224	119,27
2" BSP	2" BSP	Z117232	199,14

Adaptador macho - hembra giratoria BSP cono 60°

Adaptor male BSP 60° - swivel female BSP 60°

Adapteur mâle BSP - femelle tournante BSP cone 60°

Niples maschio - femmina girevole BSP 60°

ROSCA (M) THREAD (M)	ROSCA (H) THREAD (F)	Referencia Part n°	€
1/4" BSP	1/4" BSP	Z117004	14,89
3/8" BSP	3/8" BSP	Z117006	18,18
1/2" BSP	1/2" BSP	Z117008	23,33
3/4" BSP	3/4" BSP	Z117012	29,78
1" BSP	1" BSP	Z117016	55,26
1"1/4 BSP	1"1/4 BSP	Z117020	94,55
1"1/2 BSP	1"1/2 BSP	Z117024	114,55
2" BSP	2" BSP	Z117032	209,70

Reductor macho - hembra giratoria BSP cono 60°

Reducer male BSP 60° - swivel female BSP 60°

Réduction mâle BSP - femelle tournante BSP cone 60°

Niples di riduzione maschio - femmina girevole BSP 60°

ROSCA (M) THREAD (M)	ROSCA (H) THREAD (F)	Referencia Part n°	€
1/8" BSP	1/4" BSP	Z11730204	15,37
1/4" BSP	1/8" BSP	Z11730402	21,54
1/4" BSP	3/8" BSP	Z11730406	21,40
3/8" BSP	1/4" BSP	Z11730604	23,92
3/8" BSP	1/2" BSP	Z11730608	25,85
1/2" BSP	3/8" BSP	Z11730806	27,78
1/2" BSP	3/4" BSP	Z11730812	35,37
3/4" BSP	1/2" BSP	Z11731208	35,62
3/4" BSP	F 1" BSP	Z11731216	58,72
1" BSP	3/4" BSP	Z11731612	59,56
1" BSP	1" 1/4 BSP	Z11731620	95,23
1" 1/4 BSP	1" BSP	Z11732016	111,69
1" 1/4 BSP	1" 1/2 BSP	Z11732024	124,12
1" 1/2 BSP	1" 1/4 BSP	Z11732420	126,59
1" 1/2 BSP	2" BSP	Z11732432	192,37
2" BSP	1" 1/2 BSP	Z11733224	181,00

ADAPTADORES BSP

BSP Adaptors
Adapteurs BSP
Adattatori BSP

Tapón reductor macho BSP 60° - hembra fija BSP

Reducer plug male BSP 60° - fixed female BSP

Bouchon réducteur mâle BSP cone 60° - femelle gaz

Tappo di riduzione maschio - femmina BSP 60°

ROSCA (M) THREAD (M)	ROSCA (H) THREAD (F)	Referencia Part n°	€
1/4" BSP	1/8" BSP	Z11500402	10,57
3/8" BSP	1/8" BSP	Z11500602	15,90
3/8" BSP	1/4" BSP	Z11500604	17,03
1/2" BSP	1/4" BSP	Z11500804	19,48
1/2" BSP	3/8" BSP	Z11500806	16,64
3/4" BSP	1/2" BSP	Z11501208	19,77
1" BSP	1/2" BSP	Z11501608	34,37
1" BSP	3/4" BSP	Z11501612	30,68
1" 1/4 BSP	3/4" BSP	Z11502012	57,93
1" 1/4 BSP	1" BSP	Z11502016	53,20
1" 1/2 BSP	1" BSP	Z11502416	72,77
2" BSP	1" BSP	Z11503216	107,07
2" BSP	1" 1/4 BSP	Z11503220*	97,39
2" BSP	1" 1/2 BSP	Z11503224	96,83

*Hasta fin de existencias / *Until end of stock* / Jusqu´à la fin du stock / *Fino ad esaurimento*

Tapón hembra hexagonal rosca BSP

BSP fixed female plug

Bouchon femelle gaz

Tappo femmina fissa BSP

ROSCA THREAD	Referencia Part n°	€
1/4" BSP	Z107204	10,24
3/8" BSP	Z107206	11,76
1/2" BSP	Z107208	13,21
3/4" BSP	Z107212	22,83
1" BSP	Z107216	27,87
1"1/4 BSP	Z107220	44,30
1"1/2 BSP	Z107224	63,02
2" BSP	Z107232	87,90

Tapón macho hexagonal rosca BSP 60°

BSP male hexagonal plug

Bouchon mâle BSP cone 60°

Tappo maschio esagonale BSP

ROSCA THREAD	Referencia Part n°	€
1/8" BSP	Z107002	13,65
1/4" BSP	Z107004	8,15
3/8" BSP	Z107006	10,02
1/2" BSP	Z107008	11,94
3/4" BSP	Z107012	14,48
1" BSP	Z107016	27,65
1"1/4 BSP	Z107020	47,77
1"1/2 BSP	Z107024	73,63
2" BSP	Z107032	77,64

Tapón hembra giratoria BSP cono 60°

BSP swivel female plug

Bouchon femelle tournante BSP cone 60°

Tappo femmina girevole BSP

ROSCA THREAD	Referencia Part n°	€
1/4" BSP	Z107504	9,05
3/8" BSP	Z107506	11,62
1/2" BSP	Z107508	14,93
3/4" BSP	Z107512	20,09
1" BSP	Z107516	31,83
1" 1/4 BSP	Z107520	60,35
1"1/2 BSP	Z107524	90,06
2" BSP	Z107532	134,41

ADAPTADORES BSP

BSP Adaptors
Adapteurs BSP
Adattatori BSP

Manguito redondo roscado hembra BSP

Adaptor female fixed BSP - female fixed BSP

Manchon femelle gaz ronde

Manicotto femmina - femmina BSP

ROSCA THREAD	Referencia Part n°	€
1/8" BSP	Z131002	9,58
1/4" BSP	Z131004	9,45
3/8" BSP	Z131006	14,32
1/2" BSP	Z131008	17,92
5/8" BSP	Z131010	24,13
3/4" BSP	Z131012	24,76
1" BSP	Z131016	35,10
1"1/4 BSP	Z131020	49,85
1"1/2 BSP	Z131024	65,29
2" BSP	Z131032	90,36

Manguito hexagonal roscado hembra BSP

Adaptor hexagonal female fixed BSP - female fixed BSP

Manchon femelle gaz - femelle gaz hexagone

Prolunga esagonale femmina - femmina BSP

ROSCA THREAD	Referencia Part n°	€
1/4" BSP	Z103104	8,59
3/8" BSP	Z103106	10,97
1/2" BSP	Z103108	15,74
3/4" BSP	Z103112	24,09
1" BSP	Z103116	36,25
1"1/4 BSP	Z103120	74,14
1"1/2 BSP	Z103124	82,47

Manguito reducción hexagonal roscado hembra BSP

NEW

Reducer hexagonal female fixed BSP - female fixed BSP

Manchon réducteur femelle gaz - femelle gaz hexagone

Riduzione femmina - femmina BSP

ROSCA THREAD		Referencia Part n°	€
3/8" BSP	1/4" BSP	Z10310604	18,46*
1/2" BSP	1/4" BSP	Z10310804	26,48*
1/2" BSP	3/8" BSP	Z10310806	*
3/4" BSP	1/2" BSP	Z10311208	40,54*
1" BSP	3/4" BSP	Z10311612	*

Pasatabiques sin tuerca BSP cono 60°

Straight bulkhead adaptor BSP 60° without nut

Passe-cloison mâle BSP 60° - mâle BSP 60° sans équiper

Niples passaparete BSP 60°

ROSCA THREAD	Referencia Part n°	€
1/4" BSP	Z116004	18,91
3/8" BSP	Z116006	22,19
1/2" BSP	Z116008	29,81
3/4" BSP	Z116012	35,67
1" BSP	Z116016	61,64
1" 1/4 BSP	Z116020	87,82
1" 1/2 BSP	Z116024	122,62
2" BSP	Z116032	185,41

Tuerca pasatabiques BSP

Conter nut for BSP bulkhead

Contre-écrou passe-cloison gaz

Controdado per passaparete

ROSCA THREAD	Referencia Part n°	€
1/4" BSP	Z116104	4,53
3/8" BSP	Z116106	6,31
1/2" BSP	Z116108	7,37
3/4" BSP	Z116112	10,53
1" BSP	Z116116	13,53
1" 1/4 BSP	Z116120	27,85
1" 1/2 BSP	Z116124	36,40
2" BSP	Z116132	45,24

*Consultar / On request/ Sur demande / Su richiesta

ADAPTADORES BSP

BSP Adaptors
Adapteurs BSP
Adattatori BSP

Tornillo orientable simple BSP

BSP Bolt for banjo

Vis creuse simple pour banjo BSP

Bullone forato BSP

ROSCA THREAD		Referencia Part n°	€
1/8" BSP	NEW	Z109002	19,88
1/4" BSP		Z109004	11,42
3/8" BSP		Z109006	16,46
1/2" BSP		Z109008	21,93
3/4" BSP		Z109012	38,18
1" BSP		Z109016	50,06

Tornillo orientable simple Métrico

Metric bolt for banjo

Vis creuse simple for banjo Métrique

Bullone forato Metrico

ROSCA THREAD	Referencia Part n°	€
M12X1.5	Z109212	16,54
M14X1.5	Z109214	15,91
M16X1.5	Z109216	16,70
M18X1.5	Z109218	20,61
M22X1.5	Z109222	20,75
M26X1.5	Z109226	43,79
M30X2	Z109230	48,99

Esférico BSP - macho BSP (60°)

NEW

BSP Banjo-BSP male (60°)

Banjo passage gaz x mâle BSP (60°)

Adattatore ad ochhio filettato BSP

ROSCA THREAD	Ø	Referencia Part n°	€
1/4" BSP	1/4"	Z114004	*
3/8" BSP	3/8"	Z114006	*
1/2" BSP	1/2"	Z114008	*
3/4" BSP	3/4"	Z114012	*
1" BSP	1"	Z114016	*

Juntas metal FKM Gas Autocentrantes

BSP Bonded Seal FKM Self-centering

Bague BS gaz FKM auto-centrée

Rondella Bonded FKM BSP (INOX) Autocentrante

ROSCA THREAD	Referencia Part n°	€
1/8" BSP	ZVT21002	1,31
1/4" BSP	ZVT21004	1,09
3/8" BSP	ZVT21006	1,32
1/2" BSP	ZVT21008	2,15
5/8" BSP	ZVT21010	3,90
3/4" BSP	ZVT21012	2,82
1" BSP	ZVT21016	5,07
1" 1/4 BSP	ZVT21020	8,08
1" 1/2 BSP	ZVT21024	9,89
2" BSP	ZVT21032	13,07
2" 1/2 BSP	ZVT21040	39,83

Juntas metal FKM Métricas Autocentrantes

Metric Bonded Seal in FKM Self-centering

Bague BS Métrique FKM auto-centrée

Rondella Bonded FKM Metriche Autocentrante

ROSCA THREAD	Referencia Part n°	€
M6X1	ZVT32006	0,62
M8X1	ZVT32008	1,46
M10X1	ZVT32010	1,81
M12X1,5	ZVT32012	1,46
M14X1,5	ZVT32014	1,90
M16X1,5	ZVT32016	2,05
M18X1,5	ZVT32018	2,17
M20X1,5	ZVT32020	3,27
M22X1,5	ZVT32022	2,81
M24X1.5	ZVT32024	5,80
M26X1.5	ZVT32026	5,33
M27X1,5	ZVT32027	5,31
M30X2	ZVT32030	7,64
M36X2	ZVT32036	9,35
M42X2	ZVT32042	13,85
M48X2	ZVT32048	15,23

*Consultar / On request / Sur demande / Su richiesta

ADAPTADORES BSP

BSP Adaptors
Adapteurs BSP
Adattatori BSP

Codo 90° macho - hembra giratoria BSP cono 60°

90° Elbow swivel female BSP 60° - male BSP 60°

Adapteur coude 90° accesoriel mâle BSP - femelle tournante BSP cone 60°

Curva 90° maschio - femmina girevole BSP 60°

ROSCA THREAD		Referencia Part n°	€
1/4" BSP	1/4" BSP	**Z119404**	**46,96**
3/8" BSP	3/8" BSP	**Z119406**	**53,39**
1/2" BSP	1/2" BSP	**Z119408**	**65,34**
3/4" BSP	3/4" BSP	**Z119412**	**93,14**
1" BSP	1" BSP	**Z119416**	**108,54**
1"1/4 BSP	1"1/4 BSP	**Z119420**	**174,26**
1"1/2 BSP	1"1/2 BSP	**Z119424**	**248,02**
2" BSP	2" BSP	**Z119432**	**376,38**

Codo 45° macho - hembra giratoria BSP cono 60°

45° Ebow swivel female BSP 60° - male BSP 60°

Adapteur coude 45° accesoriel mâle BSP - femelle tournante BSP cone 60°

Curva 45° maschio - femmina girevole BSP 60°

ROSCA THREAD		Referencia Part n°	€
1/4" BSP	1/4" BSP	**Z119504**	**51,66**
3/8" BSP	3/8" BSP	**Z119506**	**53,50**
1/2" BSP	1/2" BSP	**Z119508**	**67,11**
3/4" BSP	3/4" BSP	**Z119512**	**82,99**
1" BSP	1" BSP	**Z119516**	**110,01**
1" 1/4 BSP	1" 1/4 BSP	**Z119520**	**209,22**
1"1/2 BSP	1" 1/2 BSP	**Z119524**	**270,28**
2" BSP	2" BSP	**Z119532**	**461,30**

Codo 90° hembra giratoria - hembra giratoria BSP cono 60°

90° Elbow swivel female BSP 60° - swivel female BSP 60°

Adapteur coude 90° femelle tournante BSP - femelle tournante cone 60°

Curva 90° femmina - femmina girevole BSP 60°

ROSCA THREAD		Referencia Part n°	€
1/4" BSP	1/4" BSP	**ZA119604**	**39,29**
3/8" BSP	3/8" BSP	**ZA119606**	**45,44**
1/2" BSP	1/2" BSP	**ZA119608**	**54,03**
3/4" BSP	3/4" BSP	**ZA119612**	**68,14**
1" BSP	1" BSP	**ZA119616**	**105,37**
1"1/4 BSP	1"1/4 BSP	**ZA119620**	**177,26**

Codo 45° hembra giratoria - hembra giratoria BSP cono 60°

45° Ebow swivel female BSP 60° - swivel female BSP 60°

Adapteur coude 45° femelle tournante BSP - femelle tournante BSP cone 60°

Curva 45° femmina girevole - femmina girevole BSP 60°

ROSCA THREAD		Referencia Part n°	€
1/4" BSP	1/4" BSP	**ZA119504**	**45,05**
3/8" BSP	3/8" BSP	**ZA119506**	**49,47**
1/2" BSP	1/2" BSP	**ZA119508**	**57,89**
3/4" BSP	3/4" BSP	**ZA119512**	**74,64**
1" BSP	1" BSP	**ZA119516**	**104,26**
1"1/4 BSP	1"1/4 BSP	**ZA119520**	**244,95**

ADAPTADORES BSP

BSP Adaptors
Adapteurs BSP
Adattatori BSP

Codo 90° macho - macho BSP cono 60°

90° Adaptor male - male BSP 60°

Adapteur coude 90° mâle BSP - mâle BSP cone 60° forge

Adattatore a 90° maschio - maschio BSP 60°

ROSCA THREAD		Referencia Part n°	€
1/8" BSP	1/8" BSP	Z1190002	31,17
1/4" BSP	1/4" BSP	Z1190004	28,11
3/8" BSP	3/8" BSP	Z1190006	32,26
1/2" BSP	1/2" BSP	Z1190008	43,16
3/4" BSP	3/4" BSP	Z1190012	59,39
1" BSP	1" BSP	Z1190016	88,22
1"1/4 BSP	1"1/4 BSP	Z1190020	169,71
1"1/2 BSP	1"1/2 BSP	Z1190024	180,77

Codo 90° macho BSP 60° - macho BSPT

90° Adaptor male BSP 60° - male BSPT

Adapteur coude 90° mâle BSP cone 60° - mâle gaz conique BSPT forge

Adattatore a 90° maschio BSP 60° - maschio BSPT

ROSCA THREAD		Referencia Part n°	€
1/8" BSP	1/8" BSPT	Z119202	30,63
1/4" BSP	1/4" BSPT	Z119204	23,29
3/8" BSP	3/8" BSPT	Z119206	32,86
1/2" BSP	1/2" BSPT	Z119208	41,87
3/4" BSP	3/4" BSPT	Z119212	59,50
1" BSP	1" BSPT	Z119216	87,00
1"1/4 BSP	1"1/4 BSPT	Z119220	150,73
1" 1/2 BSP	1" 1/2 BSPT	Z119224	187,36

Codo 90° regulable macho - macho BSP

90° Adjustable stud elbow male-male BSP

Coude 90° orientable mâle - mâle BSP

Adattatore a 90° orientabile maschio - maschio BSP

ROSCA THREAD		Referencia Part n°	€
1/4" BSP	1/4" BSP	Z119704	27,93
3/8" BSP	3/8" BSP	Z119706	40,34
1/2" BSP	1/2" BSP	Z119708	62,10
3/4" BSP	3/4" BSP	Z119712	85,51
1" BSP	1" BSP	Z119716	138,39

Codo 90° macho BSP 60° - macho NPT

90° Adaptor male BSP 60° - male NPT

Adapteur coude 90° mâle BSP 60° - mâle NPT forge

Adattatore a 90° maschio BSP 60° - maschio NPT

ROSCA THREAD		Referencia Part n°	€
1/4" BSP	1/4" NPT	Z11910404	28,25
3/8" BSP	3/8" NPT	Z11910606	39,95
1/2" BSP	1/2" NPT	Z11910808	41,77
3/4" BSP	3/4" NPT	Z11911212	70,61
1" BSP	1" NPT	Z11911616	84,09

Codo 90° macho - hembra giratoria BSP cono 60°

90° Adaptor male - swivel female BSP 60°

Adapteur coude 90° mâle BSP - femelle tournante BSP cone 60° forge

Adattatore a 90° maschio - femmina girevole BSP 60°

ROSCA THREAD		Referencia Part n°	€
1/8" BSP	1/8" BSP	Z119302	33,67
1/4" BSP	1/4" BSP	Z119304	28,26
3/8" BSP	3/8" BSP	Z119306	39,33
1/2" BSP	1/2" BSP	Z119308	44,71
3/4" BSP	3/4" BSP	Z119312	65,52
1" BSP	1" BSP	Z119316	89,90
1"1/4 BSP	1"1/4 BSP	Z119320	147,06
1"1/2 BSP	1"1/2 BSP	Z119324	160,28

Codo 90° hembra fija - hembra fija BSP

90° Adaptor fixed female BSP

Adapteur coude 90° femelle fixe gaz cylindrique forge

Adattatore a 90° femmina fissa BSP

ROSCA THREAD		Referencia Part n°	€
1/8" BSP	1/8" BSP	Z119602	25,54
1/4" BSP	1/4" BSP	Z119604	31,98
3/8" BSP	3/8" BSP	Z119606	44,02
1/2" BSP	1/2" BSP	Z119608	46,48
3/4" BSP	3/4" BSP	Z119612	66,27
1" BSP	1" BSP	Z119616	91,71

Codo 90° hembra giratoria - hembra giratoria BSP cono 60°

90° Adaptor swivel female BSP 60°

Adapteur coude 90° femelle tournante BSP cone 60° forge

Adattatore a 90° femmina girevole BSP 60°

ROSCA THREAD		Referencia Part n°	€
1/4" BSP	1/4" BSP	Z119804	37,32
3/8" BSP	3/8" BSP	Z119806	44,54
1/2" BSP	1/2" BSP	Z119808	55,54
3/4" BSP	3/4" BSP	Z119812	82,56
1" BSP	1" BSP	Z119816	124,73
1" 1/4 BSP	1" 1/4 BSP	Z119820	227,60
1"1/2 BSP	1"1/2 BSP	Z119824	269,27

Codo 45° macho - hembra giratoria BSP cono 60°

45° Adaptor male - swivel female BSP 60°

Adapteur coude 45° mâle BSP - femelle tournante BSP cone 60° forge

Adattatore a 45° maschio - femmina girevole BSP 60°

ROSCA THREAD		Referencia Part n°	€
M 1/4" BSP	H 1/4" BSP	Z118304	46,51
M 3/8" BSP	H 3/8" BSP	Z118306	55,49
M 1/2" BSP	H 1/2" BSP	Z118308	65,32
M 3/4" BSP	H 3/4" BSP	Z118312	105,67
M 1" BSP	H 1" BSP	Z118316	141,82

ADAPTADORES BSP

BSP Adaptors
Adapteurs BSP
Adattatori BSP

Tes macho - macho - macho BSP cono 60°

Tees BSP 60° male

Adapteurs Té mâle BSP cone 60° forge

Adattarore a T maschio BSP

ROSCA THREAD			Referencia Part n°	€
1/4" BSP	1/4" BSP	1/4" BSP	**Z122004**	**36,01**
3/8" BSP	3/8" BSP	3/8" BSP	**Z122006**	**45,51**
1/2" BSP	1/2" BSP	1/2" BSP	**Z122008**	**51,98**
3/4" BSP	3/4" BSP	3/4" BSP	**Z122012**	**74,04**
1" BSP	1" BSP	1" BSP	**Z122016**	**112,44**
1"1/4 BSP	1"1/4 BSP	1"1/4 BSP	**Z122020**	**165,38**
1"1/2 BSP	1"1/2 BSP	1"1/2 BSP	**Z122024**	**250,54**

Tes macho - macho - hembra giratoria BSP 60°

Tees BSP 60° male - male - swivel female

Adapteurs Té mâle BSP - mâle BSP - femelle tournante BSP cone 60° forge

Adattatore a T maschio - maschio - femmina girevole BSP

ROSCA (M) THREAD (M)		ROSCA (H) THREAD (F)	Referencia Part n°	€
1/4" BSP	1/4" BSP	1/4" BSP	**Z122204**	**42,29**
3/8" BSP	3/8" BSP	3/8" BSP	**Z122206**	**52,64**
1/2" BSP	1/2" BSP	1/2" BSP	**Z122208**	**60,84**
3/4" BSP	3/4" BSP	3/4" BSP	**Z122212**	**92,62**
1" BSP	1" BSP	1" BSP	**Z122216**	**134,54**
1"1/4 BSP	1"1/4 BSP	1"1/4 BSP	**Z122220**	**238,71**
1"1/2 BSP	1"1/2 BSP	1"1/2 BSP	**Z122224**	**295,06**

Tes macho - hembra giratoria - macho BSP 60°

Tees BSP 60° male - swivel female - male

Adapteurs Té mâle BSP - femelle tournante - mâle BSP cone 60° forge

Adattatore a T maschio - femmina girevole - maschio BSP

ROSCA (M) THREAD (M)	ROSCA (H) THREAD (F)	ROSCA (M) THREAD (M)	Referencia Part n°	€
1/4" BSP	1/4" BSP	1/4" BSP	**Z122404**	**41,83**
3/8" BSP	3/8" BSP	3/8" BSP	**Z122406**	**55,72**
1/2" BSP	1/2" BSP	1/2" BSP	**Z122408**	**62,03**
3/4" BSP	3/4" BSP	3/4" BSP	**Z122412**	**104,60**
1" BSP	1" BSP	1" BSP	**Z122416**	**134,54**
1"1/4 BSP	1"1/4 BSP	1"1/4 BSP	**Z122420**	**194,81**
1"1/2 BSP	1"1/2 BSP	1"1/2 BSP	**Z122424**	**295,06**

Tes hembras giratorias BSP cono 60°

Tees BSP 60° swivel female

Adapteurs Té femelle tournante BSP cone 60° forge

Adattatore a T femmina - femmina - femmina girevoli BSP

ROSCA THREAD			Referencia Part n°	€
1/4" BSP	1/4" BSP	1/4" BSP	**Z122804**	**52,70**
3/8" BSP	3/8" BSP	3/8" BSP	**Z122806**	**62,89**
1/2" BSP	1/2" BSP	1/2" BSP	**Z122808**	**76,88**
3/4" BSP	3/4" BSP	3/4" BSP	**Z122812**	**121,69**
1" BSP	1" BSP	1" BSP	**Z122816**	**157,84**
1"1/4 BSP	1"1/4 BSP	1"1/4 BSP	**Z122820**	**278,72**
1"1/2 BSP	1"1/2 BSP	1"1/2 BSP	**Z122824**	**369,20**

Tes hembras fijas BSP

Tees fixed female BSP

Adapteurs Té femelle gaz forge

Adattatore a T femmina fissa BSP

ROSCA THREAD			Referencia Part n°	€
1/4" BSP	1/4" BSP	1/4" BSP	**Z122604**	**39,11**
3/8" BSP	3/8" BSP	3/8" BSP	**Z122606**	**53,04**
1/2" BSP	1/2" BSP	1/2" BSP	**Z122608**	**62,58**
3/4" BSP	3/4" BSP	3/4" BSP	**Z122612**	**90,02**
1" BSP	1" BSP	1" BSP	**Z122616**	**126,53**

Tes macho BSP 60° - macho NPT central - macho BSP 60°

Tees BSP 60° male - NPT male center - BSP 60° male

Adapteurs Té mâle BSP 60° - mâle NPT central - mâle BSP 60° forge

Adattatore a T maschio - maschio - maschio

ROSCA THREAD			Referencia Part n°	€
1/4" BSP	1/4" NPT	1/4" BSP	**Z12210404**	**34,44**
3/8" BSP	3/8" NPT	3/8" BSP	**Z12210606**	**46,54**
1/2" BSP	1/2" NPT	1/2" BSP	**Z12210808**	**71,42**
3/4" BSP	3/4" NPT	3/4" BSP	**Z12211212**	**79,85**
1" BSP	1" NPT	1" BSP	**Z12211616**	**118,82**

Tes macho BSP 60° - macho BSP 60° - macho NPT lateral

Tees BSP 60° male - BSP 60° male - NPT lateral male

Adapteurs Té mâle BSP 60° - mâle BSP 60° - mâle NPT latéral forge

Adattatore a T maschio - maschio - maschio

ROSCA THREAD			Referencia Part n°	€
1/4" BSP	1/4" BSP	1/4" NPT	**Z12230404**	**44,18**
3/8" BSP	3/8" BSP	3/8" NPT	**Z12230606**	**46,54**
1/2" BSP	1/2" BSP	1/2" NPT	**Z12230808**	**78,17**
3/4" BSP	3/4" BSP	3/4" NPT	**Z12231212**	**79,85**
1" BSP	1" BSP	1" NPT	**Z12231616**	**118,82**

Cruz hembra fija BSP

NEW

Cross fixed female BSP

Croix BSP femelle fixe

BSP femmina fisso a croce

ROSCA THREAD	Referencia Part n°	€
1/4" BSP	**Z122704**	*
3/8" BSP	**Z122706**	*
1/2" BSP	**Z122708**	*
3/4" BSP	**Z122712**	*
1" BSP	**Z122716**	*

***Consultar** / On request/ **Sur demande** / Su richiesta

ADAPTADORES NPT

NPT Adaptors
Adapteurs NPT
Adattatori NPT

Adaptor macho - macho NPT

Adaptor male NPT - male NPT

Adapteur mâle NPT - mâle NPT

Niples di congiunzione NPT

ROSCA THREAD		Referencia Part n°	€
1/4" NPT	1/4" NPT	Z10150404	9,19
3/8" NPT	3/8" NPT	Z10150606	12,23
1/2" NPT	1/2" NPT	Z10150808	13,45
3/4" NPT	3/4" NPT	Z10151212	19,03
1" NPT	1" NPT	Z10151616	44,43
1" 1/4 NPT	1" 1/4 NPT	Z10152020	65,46
1" 1/2 NPT	1" 1/2 NPT	Z10152424	73,58
2" NPT	2" NPT	Z10153232	116,28

Reductor macho - macho NPT

Reducer male NPT - male NPT

Réducteur mâle NPT- mâle NPT

Niples di riduzione maschio - maschio NPT

ROSCA THREAD		Referencia Part n°	€
1/4" NPT	1/8" NPT	ZN10150402	13,51
3/8" NPT	1/8" NPT	ZN10150602	17,59
3/8" NPT	1/4" NPT	ZN10150604	16,50
1/2" NPT	1/4" NPT	ZN10150804	23,32
1/2" NPT	3/8" NPT	ZN10150806	25,54
3/4" NPT	3/8" NPT	ZN10151206	24,58
3/4" NPT	1/2" NPT	ZN10151208	23,08
1" NPT	1/2" NPT	ZN10151608	37,52
1" NPT	3/4" NPT	ZN10151612	43,77
1" 1/4 NPT	1" NPT	ZN10152016	73,66
1" 1/2 NPT	1" NPT	ZN10152416	102,28
1" 1/2 NPT	1" 1/4 NPT	ZN10152420	96,63

Adaptador macho - hembra fija NPT

Adaptor male NPT - fixed female NPT

Adapteur mâle NPT - femelle fixe NPT

Niples di congiunzione maschio NPT - femmina fissa NPT

ROSCA (M) THREAD (M)	ROSCA (H) THREAD (F)		Referencia Part n°	€
1/8" NPT	1/8" NPT		ZN10600202	18,43
1/8" NPT	1/4" NPT		ZN10600204	23,74
1/4" NPT	1/8" NPT		ZN10600402	18,94
1/4" NPT	1/4" NPT		ZN10600404	15,38
1/4" NPT	3/8" NPT		ZN10600406	21,44
1/4" NPT	1/2" NPT	NEW	ZN10600408	38,70
3/8" NPT	1/4" NPT		ZN10600604	22,96
3/8" NPT	3/8" NPT		ZN10600606	22,40
3/8" NPT	1/2" NPT		ZN10600608	24,72
1/2" NPT	3/8" NPT		ZN10600806	26,56
1/2" NPT	1/2" NPT		ZN10600808	28,18
1/2" NPT	3/4" NPT		ZN10600812	38,17
3/4" NPT	1/2" NPT		ZN10601208	31,56
3/4" NPT	3/4" NPT		ZN10601212	36,72
3/4" NPT	1" NPT		ZN10601216	44,17
1" NPT	3/4" NPT		ZN10601612	44,14
1" NPT	1" NPT		ZN10601616	44,09

Reductor macho - hembra fija NPT

Reducer male NPT - fixed female NPT

Réducteur mâle NPT - femelle fixe NPT

Niples di riduzione maschio NPT - femmina fissa NPT

ROSCA (M) THREAD (M)	ROSCA (H) THREAD (F)	Referencia Part n°	€
3/8" NPT	1/8" NPT	ZN11500602	27,59
3/8" NPT	1" NPT	ZN11500604	23,65
1/2" NPT	1" NPT	ZN11500804	32,21
1/2" NPT	3/8" NPT	ZN11500806	27,08
3/4" NPT	1" NPT	ZN11501204	43,77
3/4" NPT	3/8" NPT	ZN11501206	56,71
3/4" NPT	1/2" NPT	ZN11501208	41,90
1" NPT	3/8" NPT	ZN11501606	69,67
1" NPT	1/2" NPT	ZN11501608	59,66
1" NPT	3/4" NPT	ZN11501612	51,13
1" 1/4 NPT	1" NPT	ZN11502016	93,88
1" 1/2 NPT	1" NPT	ZN11502416	168,90
1" 1/2 NPT	1" 1/4 NPT	ZN11502420	127,04

Adaptador macho NPT - hembra giratoria NPSM

Adaptor male NPT - swivel female NPSM

Adapteur mâle NPT - femelle tournante NPSM

Niples di congiunzione maschio NPT - femmina girevole NPSM

ROSCA (M) THREAD (M)	ROSCA (H) THREAD (F)	Referencia Part n°	€
1/8" NPT	1/8" NPSM	ZN11700202	20,75
1/4" NPT	1/4" NPSM	ZN11700404	22,75
3/8" NPT	3/8" NPSM	ZN11700606	29,04
3/8" NPT	1/2" NPSM	ZN11700608	37,64
1/2" NPT	1/2" NPSM	ZN11700808	52,08
1/2" NPT	3/4" NPSM	ZN11700812	57,10
3/4" NPT	3/4" NPSM	ZN11701212	50,40
3/4" NPT	1" NPSM	ZN11701216	76,72
1" NPT	1" NPSM	ZN11701616	78,92
1" 1/4 NPT	1" 1/4 NPSM	ZN11702020	165,28
1" 1/2 NPT	1" 1/2 NPSM	ZN11702424	144,30

Adaptador macho UNF - hembra giratoria NPSM

Adpator male UNF - swivel female NPSM

Adapteur mâle UNF - femelle tournante NPSM

Niples di giunzione maschio UNF - femmina girevole NPSM

ROSCA THREAD		Referencia Part n°	€
7/16" - 20h UNF	1/4" - 18h NPSM	ZN11740404	54,23
9/16" - 18h UNF	3/8" - 18h NPSM	ZN11740606	59,18
9/16" - 18h UNF	1/2" - 14h NPSM	ZN11740608	79,62
3/4" - 16h UNF	1/2" - 14h NPSM	ZN11740808	73,60
3/4" - 16h UNF	3/4" - 14h NPSM	ZN11740812	114,81
7/8" - 14h UNF	1/2" - 14h NPSM	ZN11741008	87,45
7/8" - 14h UNF	3/4" - 14h NPSM	ZN11741012	116,40
1"1/16 - 12h UNF	3/4" - 14h NPSM	ZN11741212	128,15
1"5/16 - 12h UNF	1" - 11 1/2h NPSM	ZN11741616	156,36
1"5/8 - 12h UNF	1"1/4 - 11 1/2h NPSM	ZN11742020	250,93

ADAPTADORES NPT

NPT Adaptors
Adapteurs NPT
Adattatori NPT

Tapón hembra fija NPT

S.S. NPT fixed cap

Bouchon femelle fixe NPT

Tappo femmina fissa NPT INOX

ROSCA THREAD	Referencia Part n°	€
1/8" NPT	ZN107202	13,39
1/4" NPT	ZN107204	15,87
3/8" NPT	ZN107206	18,74
1/2" NPT	ZN107208	22,20
3/4" NPT	ZN107212	28,60
1" NPT	ZN107216	34,34

Tapón macho NPT

S.S. NPT male plug

Bouchon mâle NPT

Tappo maschio NPT INOX

ROSCA THREAD		Referencia Part n°	€
1/8" NPT		ZN107002	6,13
1/4" NPT		ZN107004	9,02
3/8" NPT		ZN107006	12,23
1/2" NPT		ZN107008	12,87
3/4" NPT		ZN107012	15,16
1" NPT		ZN107016	26,92
1"1/4 NPT	NEW	ZN107020	46,92
1"1/2 NPT	NEW	ZN107024	74,63

Tapón Allen NPT

NEW

S.S. NPT Allen plug

Bouchon Allen NPT

Tappo conico NPT

ROSCA THREAD	Referencia Part n°	€
1/4" NPT	ZN107104	9,92
3/8" NPT	ZN107106	13,45
1/2" NPT	ZN107108	14,15
3/4" NPT	ZN107112	16,68
1" NPT	ZN107116	29,61

Adaptador hexagonal hembra fija NPT

NPT hexagonal adaptor fixed female

Adapteur hexagonal femelle fixe NPT

Adattatore esagonale femmina fissa NPT

ROSCA THREAD		Referencia Part n°	€
1/8" NPT	1/8" NPT	ZN10310202	13,09
1/4" NPT	1/4" NPT	ZN10310404	16,30
3/8" NPT	3/8" NPT	ZN10310606	16,97
1/2" NPT	1/2" NPT	ZN10310808	20,46
3/4" NPT	3/4" NPT	ZN10311212	25,77
1" NPT	1" NPT	ZN10311616	41,12
1" 1/4 NPT	1" 1/4 NPT	ZN10312020	87,88

ADAPTADORES NPT

NPT Adaptors
Adapteurs NPT
Adattatori NPT

Codo 90° macho - macho NPT

90° elbow male NPT - male NPT

Coude 90° mâle NPT - mâle NPT

Adattatore a 90° maschio - maschio NPT

ROSCA THREAD			Referencia Part n°	€
1/8" NPT	1/8" NPT		ZN119002	18,82
1/4" NPT	1/4" NPT		ZN119004	21,84
3/8" NPT	3/8" NPT		ZN119006	30,06
1/2" NPT	1/2" NPT		ZN119008	38,93
3/4" NPT	3/4" NPT		ZN119012	66,24
1" NPT	1" NPT		ZN119016	87,88
1" 1/4 NPT	1" 1/4 NPT	NEW	ZN119020	151,40

Codo 90° macho NPT - hembra giratoria NPSM

90° elbow male NPT - swivel female NPSM

Coude 90° mâle NPT - femelle tournante NPSM

Adattatore a 90° maschio NPT - femmina girevole NPSM

ROSCA THREAD		Referencia Part n°	€
1/8" NPT	1/8" 27h NPSM	ZN11930202	38,08
1/4" NPT	1/4" - 18h NPSM	ZN11930404	33,15
1/4" NPT	3/8" - 18h NPSM	ZN11930406	103,76
3/8" NPT	3/8" - 18h NPSM	ZN11930606	52,84
3/8" NPT	1/2" - 14h NPSM	ZN11930608	105,79
1/2" NPT	1/2" - 14 NPSM	ZN11930808	58,42
1/2" NPT	3/4" - 14h NPSM	ZN11930812	144,73
3/4" NPT	1/2" - 14 NPSM	ZN11931208	139,85
3/4" NPT	3/4" - 14h NPSM	ZN11931212	87,92
3/4" NPT	1" - 11 1/2 h NPSM	ZN11931216	345,64
1" NPT	1" - 11 1/2 h NPSM	ZN11931616	102,36
1"1/4 NPT	1"1/4 - 11 1/2 h NPSM	ZN11932020	159,61

Codo 90° hembra fija - hembra fija NPT

90° elbow fixed female NPT - fixed female NPT

Coude 90° femelle fixe NPT - femelle fixe NPT

Adattatore a 90° femmina fissa - femmina fissa NPT

ROSCA THREAD		Referencia Part n°	€
1/8" NPT	1/8" NPT	ZN11960202	23,02
1/4" NPT	1/4" NPT	ZN11960404	31,84
3/8" NPT	3/8" NPT	ZN11960606	33,76
1/2" NPT	1/2" NPT	ZN11960808	54,91
3/4" NPT	3/4" NPT	ZN11961212	73,25
1" NPT	1" NPT	ZN11961616	132,09

Codo 45° macho - macho NPT

NEW

45° elbow male NPT - male NPT

Coude 45° mâle NPT - mâle NPT

Adattatore a 45° maschio - maschio NPT

ROSCA THREAD		Referencia Part n°	€
1/4" NPT	1/4" NPT	ZN119804	*
3/8" NPT	3/8" NPT	ZN119806	*
1/2" NPT	1/2" NPT	ZN119808	*
3/4 NPT	3/4 NPT	ZN119812	*
1" NPT	1" NPT	ZN119816	*

Codo 45° hembra fija- hembra fija NPT

NEW

45° elbow fixed female NPT - fixed female NPT

Coude 45° femelle fixe NPT - femelle fixe NPT

Adattatore a 45° femmina fissa - femmina fissa NPT

ROSCA THREAD		Referencia Part n°	€
1/4" NPT	1/4" NPT	ZN139604	*
3/8" NPT	3/8" NPT	ZN139606	*
1/2" NPT	1/2" NPT	ZN139608	*
3/4" NPT	3/4" NPT	ZN139612	*
1" NPT	1" NPT	ZN139616	*

Codo 45° macho NPT - hembra giratoria NPSM

45° elbow male NPT - swivel female NPSM

Coude 45° mâle NPT - swivel female NPSM

Adattatore a 45° maschio NPT - femmina girevole NPSM

ROSCA THREAD		Referencia Part n°	€
1/4" NPT	1/4" - 18h NPSM	ZN139304	95,70
3/8" NPT	3/8" - 18h NPSM	ZN139306	100,24
1/2" NPT	1/2" - 14h NPSM	ZN139308	123,72
1/4" NPT	3/4" - 14h NPSM	ZN139312	169,42
1" NPT	1" - 11 1/2 h NPSM	ZN139316	258,55

*Consultar / On request / Sur demande / Su richiesta

ADAPTADORES NPT

NPT Adaptors
Adapteurs NPT
Adattatori NPT

Tes macho-macho-macho NPT

NPT male tee

Té mâle NPT

Adattatore a T maschio-maschio-maschio NPT

ROSCA THREAD			Referencia Part n°	€
1/8" NPT	1/8" NPT	1/8" NPT	**ZN122002**	**27,55**
1/4" NPT	1/4" NPT	1/4" NPT	**ZN122004**	**44,11**
3/8" NPT	3/8" NPT	3/8" NPT	**ZN122006**	**51,88**
1/2" NPT	1/2" NPT	1/2" NPT	**ZN122008**	**59,29**
3/4" NPT	3/4" NPT	3/4" NPT	**ZN122012**	**82,71**
1" NPT	1" NPT	1" NPT	**ZN122016**	**155,83**

Tes hembra fija-hembra fija-hembra fija NPT

NPT fixed female tee

Té femelle fixe NPT

Adattatore a T femmina fissa-femmina fissa-femmina fissa NPT

ROSCA THREAD			Referencia Part n°	€
1/8" NPT	1/8" NPT	1/8" NPT	**ZN122602**	**27,79**
1/4" NPT	1/4" NPT	1/4" NPT	**ZN122604**	**46,73**
3/8" NPT	3/8" NPT	3/8" NPT	**ZN122606**	**56,81**
1/2" NPT	1/2" NPT	1/2" NPT	**ZN122608**	**65,51**
3/4" NPT	3/4" NPT	3/4" NPT	**ZN122612**	**101,23**
1" NPT	1" NPT	1" NPT	**ZN122616**	**148,57**

ADAPTADORES O'RING BOSS

O'Ring Boss Adaptors
Adapteurs O'Ring Boss
Adattatori O'Ring Boss

Adaptador macho - macho O'Ring Boss

Adaptor male - male O'Ring Boss

Adapteur mâle - mâle O'Ring Boss

Adattatore maschio-maschio o-ring Boss

TUBO PIPE	ROSCA THREAD			Referencia Part n°	€
6	1/4"	7/16"-20h UNF	7/16"-20h UNF	ZS64640606	10,93
8	5/16"	1/2"-20h UNF	1/2"-20h UNF	ZS64640808	10,55
10	3/8"	9/16"-18h UNF	9/16"-18h UNF	ZS64641010	11,01
12	1/2"	3/4"-16h UNF	3/4"-16h UNF	ZS64641212	18,74
14-15-16	5/8"	7/8"-14h UNF	7/8"-14h UNF	ZS64641616	19,36
18-20	3/4"	1"1/16-12h UN	1"1/16-12h UN	ZS64642020	27,40
25	1"	1"5/16-12h UN	1"5/16-12h UN	ZS64642525	32,94

Adaptador macho O'Ring Boss - macho JIC 37°

Adaptor male O'Ring Boss - male JIC 37°

Adapteur mâle O'Ring Boss- mâle JIC 37°

Adattatore maschio o-ring Boss - maschio JIC 37°

TUBO PIPE	ROSCA THREAD			Referencia Part n°	€
6	1/4"	7/16"-20h UNF	7/16"-20h UNF	ZS22006	16,15
8	5/16"	1/2"-20h UNF	1/2"-20h UNF	ZS22008	17,47
10	3/8"	9/16"-18h UNF	9/16"-18h UNF	ZS22010	14,25
12	1/2"	3/4"-16h UNF	3/4"-16h UNF	ZS22012	22,22
14-15-16	5/8"	7/8"-14h UNF	7/8"-14h UNF	ZS22016	25,26
18-20	3/4"	1"1/16-12h UN	1"1/16-12h UN	ZS22020	33,42
25	1"	1"5/16-12h UN	1"5/16-12h UN	ZS22025	54,59
30-32	1" 1/4	1"5/8-12h UN	1"5/8-12h UN	ZS22032	90,19
38	1" 1/2	1"7/8-12h UN	1"7/8-12h UN	ZS22038	109,35

Adaptador macho O'Ring Boss - macho regulable O'Ring Boss

Adaptor male O'Ring Boss - adjustable male O'Ring Boss

Adapteur mâle O'Ring Boss - mâle réglable O'Ring Boss

Adattatore maschio o-ring Boss - maschio regolabile o-ring Boss

TUBO PIPE	ROSCA THREAD			Referencia Part n°	€
6	1/4"	7/16"-20h UNF	7/16"-20h UNF	ZS34740606	21,96
10	3/8"	9/16"-18h UNF	9/16"-18h UNF	ZS34741010	29,96
12	1/2"	3/4"-16h UNF	3/4"-16h UNF	ZS34741212	37,65
14-15-16	5/8"	7/8"-14h UNF	7/8"-14h UNF	ZS34741616	49,37
18-20	3/4"	1"1/16-12h UN	1"1/16-12h UN	ZS34742020	88,90
25	1"	1"5/16-12h UN	1"5/16-12h UN	ZS34742525	125,50

Adaptador macho O'Ring Boss - macho NPT

Adaptor male O'Ring Boss - male NPT

Adapteur mâle O'Ring Boss- mâle NPT

Adattatore maschio o-ring Boss - maschio NPT

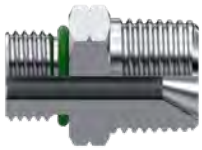

TUBO PIPE	ROSCA THREAD			Referencia Part n°	€
6	1/4"	7/16"-20h UNF	1/4" NPT	ZS64010613	10,82
10	3/8"	9/16"-18h UNF	3/8" NPT	ZS64011017	20,01
12	1/2"	3/4"-16h UNF	1/2" NPT	ZS64011221	21,84
14-15-16	5/8"	7/8"-14h UNF	1/2" NPT	ZS64011621	27,36
18-20	3/4"	1"1/16-12h UN	3/4" NPT	ZS64012026	31,56
25	1"	1"5/16-12h UN	1" NPT	ZS64012533	43,90

Adaptador macho O'Ring Boss - hembra giratoria JIC 37°

Adaptor male O'Ring Boss - swivel female JIC 37°

Adapteur mâle O'Ring Boss - femelle tournante JIC 37°

Adattatore maschio o-ring Boss - femmina gir. JIC 37°

TUBO PIPE	ROSCA (H) THREAD (F)		ROSCA (M) THREAD (M)	Referencia Part n°	€
6	1/4"	7/16" 20h UNF	7/16" 20h UNF	ZS38006	17,98
10	3/8"	9/16" 18h UNF	9/16" 18h UNF	ZS38010	24,43
12	1/2"	3/4" 16h UNF	3/4" 16h UNF	ZS38012	30,18
14-15-16	5/8"	7/8" 14h UNF	7/8" 14h UNF	ZS38016	32,87
18-20	3/4"	1"1/16 12h UN	1"1/16 12h UN	ZS38020	44,48
25	1"	1"5/16 12h UN	1"5/16 12h UN	ZS38025	63,45

Prolongador macho O'Ring Boss - hembra fija NPT

Adaptor male O'Ring Boss - fixed female NPT

Prolongateur mâle O'Ring Boss - femelle fixe NPT

Prolunga machio o-ring Boss - femmina fissa NPT

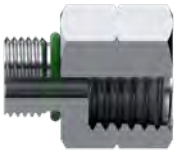

TUBO PIPE	ROSCA THREAD			Referencia Part n°	€
6	1/4"	7/16"-20h UNF	1/4" NPT	ZS64050613	26,29
10	3/8"	9/16"-18h UNF	3/8" NPT	ZS64051017	24,74
12	1/2"	3/4"-16h UNF	1/2" NPT	ZS64051221	42,35
14-15-16	5/8"	7/8"-14h UNF	1/2" NPT	ZS64051621	43,88
18-20	3/4"	1"1/16-12h UN	3/4" NPT	ZS64052026	55,51
25	1"	1"5/16-12h UN	1" NPT	ZS64052533	79,18

Tapón macho O'Ring Boss hexagonal

Male hexagonal O'Ring Boss plug

Bouchon mâle O'Ring Boss hexagonal

Tappo maschio o-ring Boss testa esagonale

ROSCA THREAD	Referencia Part n°	€
7/16" - 20h UNF	ZS640806	15,88
1/2" - 20h UNF	ZS640808	11,99
9/16" - 18h UNF	ZS640810	14,64
3/4" - 16h UNF	ZS640812	14,21
7/8" - 14h UNF	ZS640816	17,73
1"1/16 - 12h UN	ZS640820	24,41
1"5/16 - 12h UN	ZS640825	33,01

Tapón macho O'Ring Boss Allen

Male allen O'Ring Boss plug

Bouchon mâle O'Ring Boss allen

Tappo maschio o-ring Boss esagono incassato

ROSCA THREAD	Referencia Part n°	€
7/16" - 20h UNF	ZS640906	10,85
1/2" - 20h UNF	ZS640908	14,68
9/16" - 18h UNF	ZS640910	14,93
3/4" - 16h UNF	ZS640912	17,20
7/8" - 14h UNF	ZS640916	18,55
1"1/16 - 12h UN	ZS640920	26,63
1"5/16 - 12h UN	ZS640925	34,28

ADAPTADORES O'RING BOSS

O'Ring Boss Adaptors
Adapteurs O'Ring Boss
Adattatori O'Ring Boss

Codo 90° regulable macho O'Ring Boss - macho JIC 37°

90° Adjustable elbow male O'Ring Boss -male JIC 37°

Coude 90° orientable mâle O'Ring Boss - mâle JIC 37°

Curva a 90° regolabile maschio o-ring Boss - maschio JIC 37°

TUBO PIPE		ROSCA THREAD		Referencia Part n°	€
6	1/4"	7/16" - 20h UNF	7/16" - 20h UNF	**ZS57506**	**23,43**
8	5/16"	1/2" - 20h UNF	1/2" - 20h UNF	**ZS57508**	**25,93**
10	3/8"	9/16" - 18h UNF	9/16" - 18h UNF	**ZS57510**	**28,95**
12	1/2"	3/4" - 16h UNF	3/4" - 16h UNF	**ZS57512**	**47,34**
14-15-16	5/8"	7/8" - 14h UNF	7/8" - 14h UNF	**ZS57516**	**61,29**
18-20	3/4"	1" 1/16 - 12h UN	1" 1/16 - 12h UN	**ZS57520**	**90,10**
25	1"	1" 5/16 - 12h UN	1" 5/16 - 12h UN	**ZS57525**	**134,81**

Te regulable macho O'Ring Boss - macho JIC 37° - macho JIC 37°

Adjustable Tee male O'Ring Boss - male JIC 37° - male JIC 37°

Té orientable macho O'Ring Boss - macho JIC 37° - macho JIC 37°

Tee regolabile maschio o-ring Boss - maschio JIC 37° - maschio JIC 37°

TUBO PIPE		ROSCA THREAD	Referencia Part n°	€
6	1/4"	7/16" - 20h UNF	**ZS680306**	*
8	5/16"	1/2" - 20h UNF	**ZS680308**	*
10	3/8"	9/16" - 18h UNF	**ZS680310**	*
12	1/2"	3/4" - 16h UNF	**ZS680312**	*
14-15-16	5/8"	7/8" 14h UNF	**ZS680316**	*
18-20	3/4"	1"1/16-12h UN	**ZS680320**	*
25	1"	1" 5/16-12h UN	**ZS680325**	*

Te regulable macho JIC 37° - macho O'Ring Boss - macho JIC 37°

Adjustable Tee male JIC 37° - male O'Ring Boss - male JIC 37°

Té orientable macho JIC 37° - macho O'Ring Boss - macho JIC 37°

Tee regolabile maschio JIC 37° - maschio o-ring Boss- maschio JIC 37°

TUBO PIPE		ROSCA THREAD	Referencia Part n°	€
6	1/4"	7/16" - 20h UNF	**ZS680406**	*
8	5/16"	1/2"-20h UNF	**ZS680408**	*
10	3/8"	9/16" - 18h UNF	**ZS680410**	*
12	1/2"	3/4" - 16h UNF	**ZS680412**	*
14-15-16	5/8"	7/8" 14h UNF	**ZS680416**	*
18-20	3/4"	1"1/16-12h UN	**ZS680420**	*
25	1"	1" 5/16-12h UN	**ZS680425**	*

*Consultar / On request/ Sur demande / Su richiesta

ADAPTADORES ORFS

ORFS Adaptors
Adapteurs ORFS
Adattatori ORFS

Tuerca ORFS

ORFS Nut

Écrou ORFS

Dado ORFS

TUBO PIPE	ROSCA THREAD	Referencia Part n°	€
6-8	ORFS 9/16"-18h	**ZOR1020400**	**12,09**
10	ORFS 11/16"-16h	**ZOR1020600**	**11,80**
12	ORFS 13/16"-16h	**ZOR1020800**	**13,21**
14-15-16	ORFS 1"-14h	**ZOR1021000**	**20,18**
18-20	ORFS 1"3/16-12h	**ZOR1021200**	**19,20**
22-25	ORFS 1"7/16-12h	**ZOR1021600**	**25,01**
28-30-32	ORFS 1"11/16-12h	**ZOR1022000**	**48,32**
35-38	ORFS 2"-12h	**ZOR1022400**	**56,99**

Cono soldar ORFS

ORFS Welding nipple

Collet à souder ORFS

Ogiva a saldare ORFS

TUBO PIPE	ROSCA THREAD	Referencia Part n°	€
6	ORFS 9/16"-18h	**ZOR12730406**	**9,03**
8	ORFS 9/16"-18h	**ZOR12730408**	**9,86**
10	ORFS 11/16"-16h	**ZOR12730610**	**10,02**
12	ORFS 13/16"16h	**ZOR12730812**	**10,73**
14	ORFS 1"-14h	**ZOR12731014**	**18,01**
15	ORFS 1"-14h	**ZOR12731015**	**13,54**
16	ORFS 1"-14h	**ZOR12731016**	**13,77**
18	ORFS 1" 3/16-12h	**ZOR12731218**	**23,04**
20	ORFS 1" 3/16-12h	**ZOR12731220**	**23,04**
22	ORFS 1" 7/16-12h	**ZOR12731622**	**32,62**
30	ORFS 1"11/16-12h	**ZOR12732030**	**41,26**
32	ORFS 1"11/16-12h	**ZOR12732032**	**41,26**
38	ORFS 2"-12h	**ZOR12732438**	**74,96**

Tapón macho ORFS

ORFS Male plug

Bouchon mâle ORFS

Tappo maschio ORFS

ROSCA THREAD	Referencia Part n°	€
ORFS 9/16"-18h	**ZOR1040400**	**10,49**
ORFS 11/16"-16h	**ZOR1040600**	**14,07**
ORFS 13/16"-16h	**ZOR1040800**	**14,32**
ORFS 1"-14h	**ZOR1041000**	**26,98**
ORFS 1"3/16-12h	**ZOR1041200**	**26,51**
ORFS 1"7/16-12h	**ZOR1041600**	**43,91**
ORFS 1"11/16-12h	**ZOR1042000**	**56,14**
ORFS 2"-12h	**ZOR1042400**	**69,91**

Tapón hembra ORFS

ORFS cap

Bouchon femelle ORFS

Tappo femmina ORFS

ROSCA THREAD	Referencia Part n°	€
ORFS 9/16"-18h	**ZOR1050400**	**17,12**
ORFS 11/16"-16h	**ZOR1050600**	**18,09**
ORFS 13/16"-16h	**ZOR1050800**	**21,80**
ORFS 1"-14h	**ZOR1051000**	**28,68**
ORFS 1"3/16-12h	**ZOR1051200**	**43,06**
ORFS 1"7/16-12h	**ZOR1051600**	**52,57**
ORFS 1"11/16-12h	**ZOR1052000**	**68,92**
ORFS 2"-12h	**ZOR1052400**	**91,41**

Adaptador macho-macho ORFS

ORFS Male adaptor

Adapteur mâle ORFS

Adattatore maschio ORFS

ROSCA THREAD		Referencia Part n°	€
ORFS 9/16"-18h	ORFS 9/16"-18h	**ZOR2000404**	**23,55**
ORFS 11/16"-16h	ORFS 11/16"-16h	**ZOR2000606**	**23,94**
ORFS 13/16"-16h	ORFS 13/16"-16h	**ZOR2000808**	**29,21**
ORFS 1"-14h	ORFS 1"-14h	**ZOR2001010**	**41,84**
ORFS 1"3/16-12h	ORFS 1"3/16-12h	**ZOR2001212**	**33,83**
ORFS 1"7/16-12h	ORFS 1"7/16-12h	**ZOR2001616**	**52,28**
ORFS 1"11/16-12h	ORFS 1"11/16-12h	**ZOR2002020**	**70,80**
ORFS 2"-12h	ORFS 2"-12h	**ZOR2002424**	**96,56**

Adaptador macho ORFS-macho BSP

ORFS Male - BSP Male

Adapteur mâle ORFS - mâle BSP

Adattatore maschio ORFS-BSP

ROSCA THREAD			Referencia Part n°	€
ORFS 9/16"-18h	BSP 1/4"		**ZOR2020404**	**22,82**
ORFS 11/16"-16h	BSP 3/8"		**ZOR2020606**	**22,89**
ORFS 13/16"-16h	BSP 1/2"		**ZOR2020808**	**32,73**
ORFS 1"3/16-12h	BSP 3/4"		**ZOR2021212**	**45,87**
ORFS 1"7/16-12h	BSP 1"		**ZOR2021616**	**56,70**
ORFS 1"7/16-12h	BSP 1" 1/4	NEW	**ZOR2021620**	**97,81**
ORFS 1"11/16-12h	BSP 1" 1/4		**ZOR2022020**	**95,78**
ORFS 2"-12h	BSP 1" 1/2		**ZOR2022424**	**134,96**

ADAPTADORES ORFS

ORFS Adaptors
Adapteurs ORFS
Adattatori ORFS

Adaptador macho ORFS-macho Métrico

ORFS Male - Metric Male

Adapteur mâle ORFS - mâle Métrique

Maschio ORFS Metrico

ROSCA THREAD		Referencia Part n°	€
ORFS 9/16"-18h	M12x1.5	**ZOR10170412**	**24,62**
ORFS 11/16"-16h	M16x1.5	**ZOR10170616**	**25,03**
ORFS 13/16"-16h	M18x1.5	**ZOR10170818**	**36,36**
ORFS 1"-14h	M22x1.5	**ZOR10171022**	**48,99**
ORFS 1"7/16-12h	M33x2	**ZOR10171633**	**62,99**
ORFS 1"11/16-12h	M42x2	**ZOR10172042**	**102,32**
ORFS 2"-12h	M48x2	**ZOR10172448**	**149,96**

Pasatabiques ORFS

ORFS Bulkhead

Passe-cloison ORFS

Passaparete ORFS

ROSCA THREAD	Referencia Part n°	€
ORFS 9/16"-18h	**ZOR1060404**	**42,65**
ORFS 11/16"-16h	**ZOR1060606**	**42,20**
ORFS 13/16"-16h	**ZOR1060808**	**53,65**
ORFS 1"-14h	**ZOR1061010**	**90,16**
ORFS 1"3/16-12h	**ZOR1061212**	**103,87**
ORFS 1"7/16-12h	**ZOR1061616**	**124,60**
ORFS 1"11/16-12h	**ZOR1062020**	**145,81**
ORFS 2"-12h	**ZOR1062424**	**182,47**

Adaptador macho-hembra giratoria ORFS

ORFS Male - ORFS Swivel female

Adapteur mâle - femelle tournante ORFS

Adattatore femmina girevole ORFS-maschio ORFS

ROSCA (H) THREAD (F)	ROSCA (M) THREAD (M)		Referencia Part n°	€
ORFS 9/16"-18h	ORFS 11/16"-16h		**ZOR3010406**	**25,44**
ORFS 11/16"-16h	ORFS 9/16"-18h		**ZOR3010604**	**27,66**
ORFS 13/16"-16h	ORFS 9/16"-18h		**ZOR3010804**	**31,25**
ORFS 13/16"-16h	ORFS 11/16"-16h		**ZOR3010806**	**28,64**
ORFS 1"-14h	ORFS 9/16"18h		**ZOR3011004**	**40,60**
ORFS 1"-14h	ORFS 11/16"16h		**ZOR3011006**	**39,80**
ORFS 1"-14h	ORFS 13/16"-16h		**ZOR3011008**	**37,86**
ORFS 1"3/16-12h	ORFS 11/16"-16h		**ZOR3011206**	**70,05**
ORFS 1"3/16-12h	ORFS 13/16-16h		**ZOR3011208**	**68,50**
ORFS 1"3/16-12h	ORFS 1"-14h		**ZOR3011210**	**63,32**
ORFS 1"7/16-12h	ORFS 13/16"-16h		**ZOR3011608**	**77,32**
ORFS 1"7/16-12h	ORFS 1"-14h		**ZOR3011610**	**74,99**
ORFS 1"7/16-12h	ORFS 1"3/16-12h	NEW	**ZOR3011612**	**73,85**
ORFS 1"11/16-12h	ORFS 1"3/16-12h		**ZOR3012012**	**71,24**
ORFS 1"11/16-12h	ORFS 1"7/16-12h		**ZOR3012016**	**100,13**

Adaptador macho ORFS-macho JIC 37°

ORFS Male - 37° JIC Male

Adapteur mâle ORFS - mâle JIC 37°

Adattatore maschio ORFS-JIC

ROSCA THREAD		Referencia Part n°	€
ORFS 9/16"-18h	JIC 7/16"	**ZOR2040404**	**17,48**
ORFS 11/16"-16h	JIC 9/16"	**ZOR2040606**	**24,54**
ORFS 13/16"-16h	JIC 3/4"	**ZOR2040808**	**24,01**
ORFS 1"-14h	JIC 7/8"	**ZOR2041010**	**24,22**
ORFS 1"3/16-12h	JIC 1"1/16	**ZOR2041212**	**31,76**
ORFS 1"7/16-12h	JIC 1"5/16	**ZOR2041616**	**49,77**
ORFS 1"11/16"-12h	JIC 1"5/8	**ZOR2042020**	**72,84**
ORFS 2"-12h	JIC 1"7/8	**ZOR2042424**	**104,28**

Adaptador macho ORFS-hembra giratoria JIC 37°

ORFS Male - 37° JIC Swivel female

Adapteur mâle ORFS - femelle tournante JIC 37°

Adattatore maschio ORFS-femmina girevole JIC

ROSCA THREAD		Referencia Part n°	€
ORFS 9/16"-18h	JIC 7/16"	**ZOR3020404**	**21,89**
ORFS 11/16"-16h	JIC 9/16"	**ZOR3020606**	**29,75**
ORFS 13/16"-16h	JIC 3/4"	**ZOR3020808**	**25,97**
ORFS 1"-14h	JIC 7/8"	**ZOR3021010**	**33,95**
ORFS 1"3/16-12h	JIC 1" 1/16	**ZOR3021212**	**41,92**
ORFS 1"7/16-12h	JIC 1" 5/16	**ZOR3021616**	**56,66**
ORFS 1"11/16-12h	JIC 1" 5/8	**ZOR3022020**	**71,26**
ORFS 2"-12h	JIC 1" 7/8	**ZOR3022424**	**83,65**

Adaptador macho JIC 37°-hembra giratoria ORFS

JIC Male - ORFS Swivel female

Adapteur mâle JIC 37° - femelle tournante ORFS

Adattatore maschio JIC 37° -femmina girevole ORFS

ROSCA THREAD		Referencia Part n°	€
JIC 7/16"	ORFS 9/16"-18 h	**ZOR3050404**	**23,56**
JIC 9/16"	ORFS 11/16"-16h	**ZOR3050606**	**27,49**
JIC 3/4"	ORFS 13/16"-16 h	**ZOR3050808**	**33,14**
JIC 7/8"	ORFS 1"-14h	**ZOR3051010**	**37,23**
JIC 1"1/16	ORFS 1"3/16-12 h	**ZOR3051212**	**51,79**
JIC 1" 5/16	ORFS 1"7/16-12 h	**ZOR3051616**	**74,68**
JIC 1"5/8	ORFS 1"11/16"-12h	**ZOR3052020**	**90,19**
JIC 1"7/8"	ORFS 2"-12h	**ZOR3052424**	**90,27**

ADAPTADORES ORFS

ORFS Adaptors
Adapteurs ORFS
Adattatori ORFS

Codo 90° macho-macho ORFS

90° ORFS male - ORFS male

Coude 90° mâle ORFS - mâle ORFS

Raccordo a 90° maschio ORFS-ORFS

ROSCA THREAD		Referencia Part n°	€
ORFS 9/16"-18h	ORFS 9/16"-18h	**ZOR4050404**	**35,33**
ORFS 11/16"-16h	ORFS 11/16"-16h	**ZOR4050606**	**47,19**
ORFS 13/16"-16h	ORFS 13/16"-16h	**ZOR4050808**	**58,01**
ORFS 1"-14h	ORFS 1"-14h	**ZOR4051010**	**64,59**
ORFS 1"3/16-12h	ORFS 1"3/16-12h	**ZOR4051212**	**74,30**
ORFS 1"7/16-12h	ORFS 1"7/16-12h	**ZOR4051616**	**103,58**
ORFS 1"11/16-12h	ORFS 1"11/16-12h	**ZOR4052020**	**157,39**
ORFS 2"-12h	ORFS 2"-12h	**ZOR4052424**	**194,96**

Codo 90° macho-hembra giratoria ORFS

90° ORFS swivel female - ORFS male

Coude 90° femelle tournante ORFS- mâle ORFS

Raccordo a 90° maschio-femmina girevole ORFS

ROSCA (M) THREAD (M)	ROSCA (H) THREAD (F)	Referencia Part n°	€
ORFS 9/16"-18h	ORFS 9/16"-18h	**ZOR6000404**	**50,97**
ORFS 11/16"-16h	ORFS 11/16"-16h	**ZOR6000606**	**63,73**
ORFS 13/16"-16h	ORFS 13/16"-16h	**ZOR6000808**	**83,39**
ORFS 1"-14h	ORFS 1"-14h	**ZOR6001010**	**89,94**
ORFS 1"3/16-12h	ORFS 1"3/16-12h	**ZOR6001212**	**111,28**
ORFS 1"7/16-12h	ORFS 1"7/16-12h	**ZOR6001616**	**126,82**
ORFS 1"11/16-12h	ORFS 1"11/16-12h	**ZOR6002020**	**155,90**

Te macho-macho-macho ORFS

ORFS Male Tee

Té Mâle ORFS

Raccordo a T maschio ORFS

ROSCA THREAD	Referencia Part n°	€
ORFS 9/16"18h	**ZOR7000404**	**45,50**
ORFS 11/16"-16h	**ZOR7000606**	**48,09**
ORFS 13/16"-16h	**ZOR7000808**	**60,26**
ORFS 1"-14h	**ZOR7001010**	**70,26**
ORFS 1"3/16-12h	**ZOR7001212**	**91,47**
ORFS 1"7/16-12h	**ZOR7001616**	**137,18**
ORFS 1"11/16-12h	**ZOR7002020**	**175,34**
ORFS 2"-12h	**ZOR7002424**	**252,28**

Te macho-hembra giratoria-macho ORFS

ORFS Male-Swivel female-Male Tee

Té Mâle-Femelle tournante-Mâle ORFS

Raccordo a T maschio-femmina girevole centrale-maschio ORFS

ROSCA THREAD	Referencia Part n°	€
ORFS 9/16"-18h	**ZOR7010404**	**74,20**
ORFS 11/16"-16h	**ZOR7010606**	**75,86**
ORFS 13/16"-16h	**ZOR7010808**	**83,28**
ORFS 1"-14h	**ZOR7011010**	**119,72**
ORFS 1"3/16-12h	**ZOR7011212**	**144,10**
ORFS 1"7/16-12h	**ZOR7011616**	**194,64**
ORFS 1"11/16-12h	**ZOR7012020**	**226,83**
ORFS 2"-12h	**ZOR7012424**	**284,43**

Te macho-macho-hembra giratoria ORFS

ORFS Male-Male-Swivel Female Tee

Té Mâle-Mâle-Femelle tournante ORFS

Raccordo a T maschio-maschio-femmina girevole laterale ORFS

ROSCA THREAD	Referencia Part n°	€
ORFS 9/16"-18h	**ZOR7020404**	**74,20**
ORFS 11/16"-16h	**ZOR7020606**	**78,89**
ORFS 13/16"-16h	**ZOR7020808**	**86,61**
ORFS 1"-14h	**ZOR7021010**	**119,72**
ORFS 1"3/16-12h	**ZOR7021212**	**158,26**
ORFS 1"7/16-12h	**ZOR7021616**	**194,64**
ORFS 1" 11/16-12h	**ZOR7022020**	**220,65**

Juntas tóricas FKM verde para rosca ORFS

O'ring FKM green for ORFS thread

Joint torique FKM vert pour filetage ORFS

Guarnizione FKM verde per filetto ORFS

ROSCA THREAD	Referencia Part n°	€
ORFS 9/16"-18h	**JVORFS04**	**0,49**
ORFS 11/16"-16h	**JVORFS06**	**0,54**
ORFS 13/16"-16h	**JVORFS08**	**0,61**
ORFS 1"-14h	**JVORFS10**	**0,68**
ORFS 1"3/16-12h	**JVORFS12**	**0,92**
ORFS 1"7/16-12h	**JVORFS16**	**1,44**
ORFS 1" 11/16-12h	**JVORFS20**	**1,81**
ORFS 2"-12h	**JVORFS24**	**2,15**

DICSA
GROWING UP TOGETHER

Fabricamos pensando en ti

La calidad de los artículos de DICSA es controlada con la más avanzada tecnología

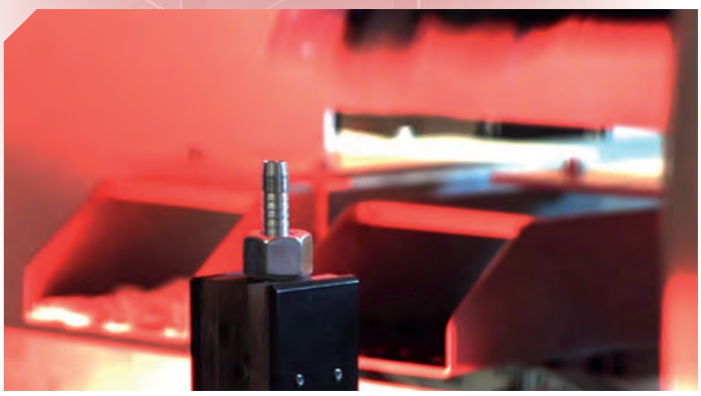

Alta rapidez de mecanizado
High speed machining

Máquina Transfer de alta productividad
Highly productivity Transfer machine

Tornos tipo suizo CNC
CNC Swiss Type Automatic Lathes

Curvadora automática
Automatic bending machine

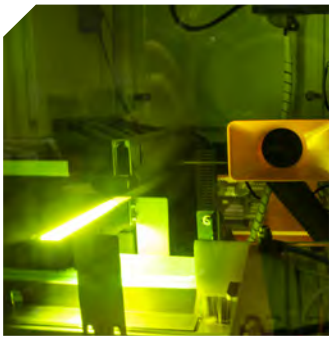

Marcadora láser
Laser marking

Máquina semi-automática de montaje
Semi-automatic fitting machine

CNC Robotizado
CNC Machine

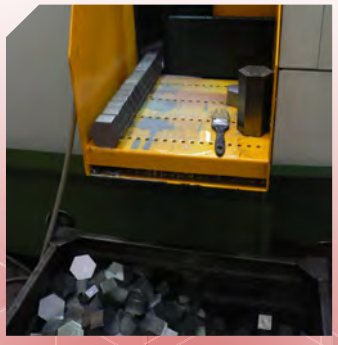

Máquina de corte computarizada
Computerized Cutter Machine

We can be your Manufacturing Partners

The quality and uniformity of DICSA's products are controlled by the most innovative technology

RACORES SOLDABLES 199
Welding fittings
Embouts à souder
Raccordi a saldare

BRIDAS SOLDABLES 207
Welding flanges
Brides à souder
Flangia a saldare

05

RACORES SOLDABLES

Welding fittings
Embouts à souder
Raccordi a saldare

RACORES SOLDABLES

Welding fittings
Embouts à souder
Raccordi a saldare

Racores macho para soldar ▪ Welding Male ▪ Raccords mâle à souder ▪ Maschio a saldare | 199

81070 Z1035 Z10351 Z1033 Z1290 Z1032 Z1034

Racores BSP para soldar ▪ Welding BSP nuts ▪ Écrous tournants à souder ▪ Raccordi BSP a saldare | 200

Z1281 Z1037 Z1038 Z1282 Z1039 Z1040

Racores JIC para soldar ▪ Welding JIC fittings ▪ Raccords JIC à souder ▪ Raccordi JIC a saldare | 201

Z1283 Z1036 Z1041 Z1042

Racores Métricos para soldar ▪ Welding metric fittings ▪ Raccords métriques à souder ▪ Raccordi metrici a saldare | 202

Z1051 ZCMORIL/S KZL00 KZC90 KZC45 Z1052 Z1054 Z1053 Z1055

Z1050

BSP >2" ▪ Welding fittings >2" ▪ Raccords à souder >2" ▪ Raccordi a saldare > 2" | 204

Z1270 ZM1032 ZM1032

Conos ajuste BSP ▪ Other welding BSP fittings ▪ Autres raccords à souder BSP ▪ Raccordi a saldare vari BSP | 205

Z1270 Z1273 Z1274

Conos ajuste JIC ▪ Other welding JIC fittings ▪ Autres raccords à souder JIC ▪ Raccordi a saldare vari JIC | 205

Z1277 ZS110

Racores Microfundido para soldar ▪ Welding fittings microcast ▪ Raccords à souder micro-moulés ▪ Raccordi per saldatura microfuso | 206

ZFIG340...HS ZFIG340...S ZFIG341...MS

BRIDAS SOLDABLES

Welding flanges
Brides à souder
Flangia a saldare

Bridas fijas para soldar ▪ Fixed Forged flanges ▪ Brides DIN à souder fixes ▪ Flange a saldare | 207

ZBPN162633 ZBPN402635 ZBANSAWN150 ZBANSAWN300

Conjunto bridas DIN 2642 ▪ DIN 2642 swivel flanges set ▪ Ensemble brides tournantes DIN 2642 ▪ Flangia girevole DIN 2642 | 208

ZBPN102642 ZABARO2642 ZBTUBO

Conjunto bridas DIN 2656 ▪ DIN 2656 swivel flanges set ▪ Ensemble brides tournantes DIN 2656 ▪ Flangia girevole DIN 2656 | 209

ZBPN402656 ZABARO2656 ZBTUBO

Conjunto bridas ANSI-ASA ▪ ANSI-ASA swivel flanges set ▪ Ensemble brides ANSI-ASA ▪ Flangia girevole ANSI-ASA | 210

ZBANSASO150 ZBANSASO300 ZABAROANSA ZBTUBO

DICSA

CONSULTA EL CATÁLOGO DE CONDUCCIONES

REQUEST ON CATALOGUE CONNECTORS

www.dicsaes.com

MANGUERAS ACERO INOXIDABLE
STAINLESS STEEL HOSES

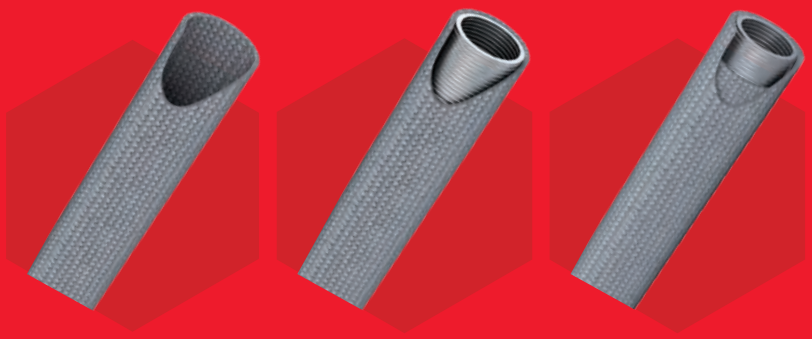

Mangueras de inoxidable corrugado para instalaciones en el sector químico, centrales eléctricas y plantas petroquímicas.

Convoluted stainless steel hoses for a variety of facilities, such us chemical sector, power plant, oil and gas.

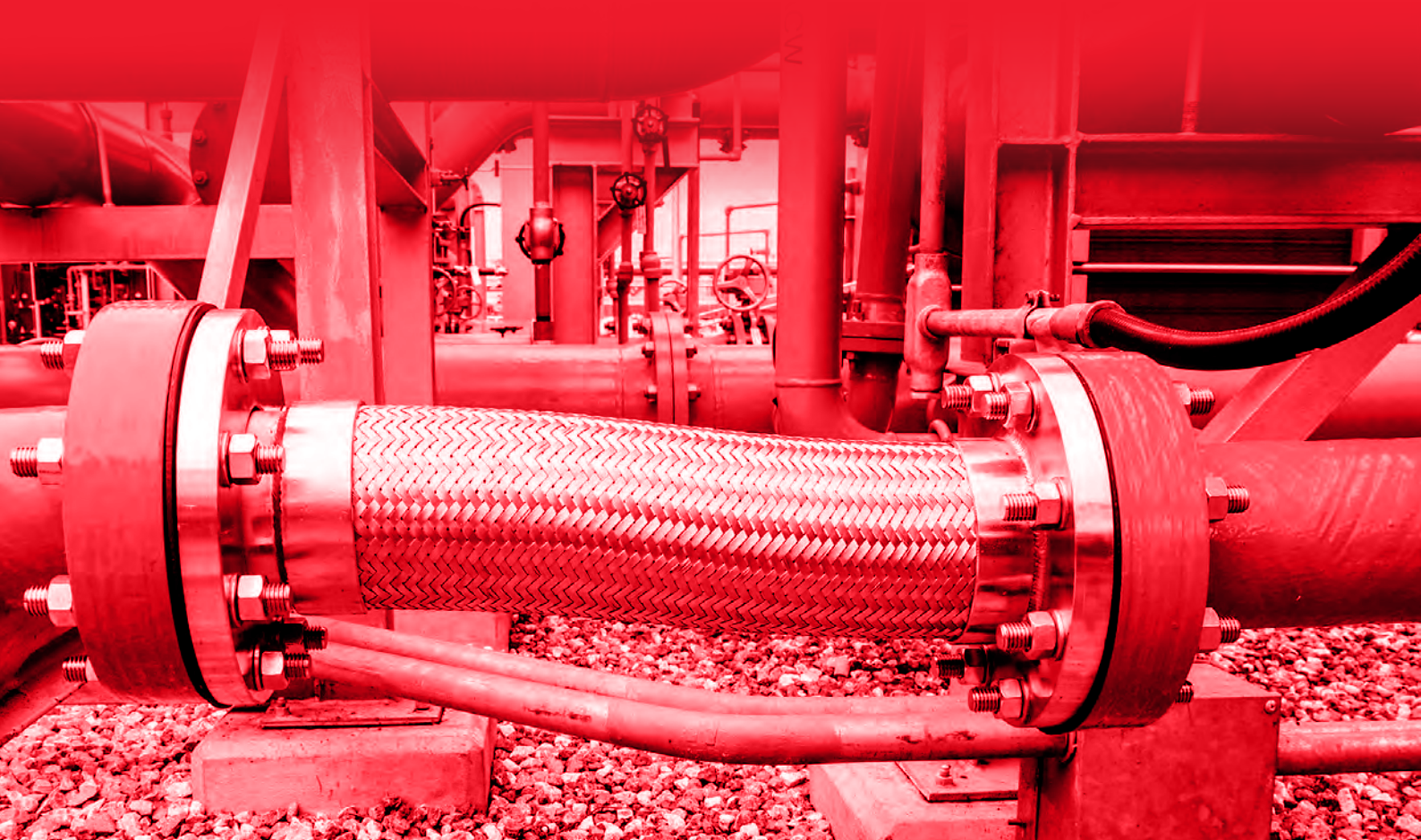

RACORES SOLDABLES

Welding fittings
Embouts à souder
Raccordi a saldare

Casquillo soldable

Welding ferrule

Jupe à souder

Boccola a saldare

DN	Ø INT. Ø INNER	Referencia Part n°	€
1/4"	14	810700400	1,67
1/4"	12	810700401	1,80
3/8"	19	810700600	2,60
3/8"	17	810700601	1,91
1/2"	22	810700800	2,44
1/2"	19	810700801	2,44
5/8"	25	810701000	2,83
3/4"	30	810701200	3,01
3/4"	32	810701201	3,30
1"	35	810701500	3,45
1"	37	810701600	5,56
1"1/4	47,8	810702000	6,33
1"1/4	44,3	810702001	6,13
1"1/2	56.3	810702400	7,41
2"	66	810703201	11,54
2"1/2	84,9	810704000	15,48
2"1/2	95,6	810704001	23,17
3"	100	810704801	27,05
4"	125	810706400	35,86

Macho soldable BSP cono 60° con guía

Welding BSP 60° Male with guide

Mâle gaz BSP 60° à souder avec guide

Maschio a saldare BSP 60° con guida

ROSCA THREAD	DN	Referencia Part n°	€
1/4" BSP	1/4"	Z103504	13,98
3/8" BSP	3/8"	Z103506	14,08
1/2" BSP	1/2"	Z103508	12,96
3/4" BSP	3/4"	Z103512	18,39
1" BSP	1"	Z103516	33,00
1"1/4 BSP	1"1/4	Z103520	54,30
1"1/2 BSP	1"1/2	Z103524	68,25
2" BSP	2"	Z103532	85,36

Macho BSP 60° soldable interior

Inside welding BSP Male

Mâle à souder int. BSP

Maschio BSP 60° a saldare interno

ROSCA THREAD	DN	Referencia Part n°	€
1/4" BSP	1/4"	Z1035104	14,79
3/8" BSP	3/8"	Z1035106	18,93
1/2" BSP	1/2"	Z1035108	20,34
3/4" BSP	3/4"	Z1035112	22,74
1" BSP	1"	Z1035116	32,66
1"1/4 BSP	1"1/4	Z1035120	53,56
1"1/2 BSP	1"1/2	Z1035124	62,07
2" BSP	2"	Z1035132	90,57

Macho soldable BSP asiento plano con guía

Welding BSP Male flat seat with guide

Mâle gaz BSP fond plat à souder avec guide

Maschio a saldare BSP faccia piana con guida

ROSCA THREAD	DN	Referencia Part n°	€
1/4" BSP	1/4"	Z103304	13,48
3/8" BSP	3/8"	Z103306	21,57
1/2" BSP	1/2"	Z103308	16,50
3/4" BSP	3/4"	Z103312	21,88
1" BSP	1"	Z103316	34,13
1"1/4 BSP	1"1/4	Z103320	56,54
1"1/2 BSP	1"1/2	Z103324	72,27
2" BSP	2"	Z103332	95,81

Empalme liso soldable macho BSP 60°

Welding male BSP 60° union

Embout mâle lisse à souder BSP cône 60°

Mezzo Niples tondo maschio a saldare BSP 60°

ROSCA THREAD	DN	Referencia Part n°	€
1/8" BSP	1/8"	Z129002	7,65
1/4" BSP	1/4"	Z129004	7,78
3/8" BSP	3/8"	Z129006	7,96
1/2" BSP	1/2"	Z129008	8,76
3/4" BSP	3/4"	Z129012	19,63
1" BSP	1"	Z129016	26,00
1"1/4 BSP	1"1/4	Z129020	33,48
1"1/2 BSP	1"1/2	Z129024	48,53
2" BSP	2"	Z129032	109,72

Macho soldable BSPT cono 60° con guía

Welding BSPT Male 60° with guide

Mâle gaz conique à souder 60° avec guide

Maschio conico BSPT 60° con guida

ROSCA THREAD	DN	Referencia Part n°	€
1/4" BSPT	1/4"	Z103204	12,72
3/8" BSPT	3/8"	Z103206	15,76
1/2" BSPT	1/2"	Z103208	13,76
3/4" BSPT	3/4"	Z103212	19,49
1" BSPT	1"	Z103216	30,22
1"1/4 BSPT	1"1/4	Z103220	49,91
1"1/2 BSPT	1"1/2	Z103224	61,83
2" BSPT	2"	Z103232	91,95

RACORES SOLDABLES

Welding fittings
Embouts à souder
Raccordi a saldare

Macho soldable NPT cono 60° con guía

Welding NPT Male 60° with guide

Mâle NPT à souder 60° avec guide

Maschio a saldare NPT 60° con guida

ROSCA THREAD	DN		Referencia Part n°	€
1/8" NPT	1/4"	NEW	Z10340204	21,4421,44
1/4" NPT	1/4"		Z10340400	11,22
3/8" NPT	3/8"		Z10340600	14,49
1/2" NPT	1/2"		Z10340800	16,61
3/4" NPT	3/4"		Z10341200	20,78
1" NPT	1"		Z10341600	31,14
1"1/4 NPT	1"1/4		Z10342000	50,69
1"1/2 NPT	1"1/2		Z10342400	57,42
2" NPT	2"		Z10343200	101,67

Hembra giratoria prensada soldable BSP 60° con guía

Welding BSP 60° swept with guide

Femelle tournante BSP 60° à souder avec guide

Femmina girevole a saldare BSP 60° con guida

ROSCA THREAD	DN	Referencia Part n°	€
1/4" BSP	1/4"	Z128104	12,52
3/8" BSP	3/8"	Z128106	12,91
1/2" BSP	1/2"	Z128108	16,45
3/4" BSP	3/4"	Z128112	21,31
1" BSP	1"	Z128116	30,40
1"1/4 BSP	1"1/4	Z128120	61,12
1"1/2 BSP	1"1/2	Z128124	71,28
2" BSP	2"	Z128132	115,88

Hembra giratoria 90° prensada soldable BSP 60°

Welding BSP 60° swept 90°

Femelle tournante à souder 90° BSP cône 60°

Femmina girevole 90° a saldare BSP 60°

ROSCA THREAD	DN	Referencia Part n°	€
1/4" BSP	1/4"	Z103704	27,45
3/8" BSP	3/8"	Z103706	32,34
1/2" BSP	1/2"	Z103708	38,17
3/4" BSP	3/4"	Z103712	56,45
1" BSP	1"	Z103716	69,71
1"1/4 BSP	1"1/4	Z103720	112,88
1"1/2 BSP	1"1/2	Z103724	149,09
2" BSP	2"	Z103732	157,78

Hembra giratoria 45° prensada soldable BSP 60°

Welding BSP 60° swept 45°

Femelle tournante à souder 45° BSP cône 60°

Femmina girevole 45° a saldare BSP 60°

ROSCA THREAD	DN	Referencia Part n°	€
1/4" BSP	1/4"	Z103804	27,80
3/8" BSP	3/8"	Z103806	33,22
1/2" BSP	1/2"	Z103808	41,76
3/4" BSP	3/4"	Z103812	49,22
1" BSP	1"	Z103816	66,96
1"1/4 BSP	1"1/4	Z103820	119,13
1"1/2 BSP	1"1/2	Z103824	127,73
2" BSP	2"	Z103832	155,52

Hembra giratoria prensada soldable BSP asiento plano con guía

Welding BSP flat seat swept with guide

Femelle tournante BSP fond plat à souder avec guide

Femmina girevole a saldare BSP faccia piana con guida

ROSCA THREAD	DN	Referencia Part n°	€
1/4" BSP	1/4"	Z128204	10,84
3/8" BSP	3/8"	Z128206	13,58
1/2" BSP	1/2"	Z128208	15,05
3/4" BSP	3/4"	Z128212	18,09
1" BSP	1"	Z128216	27,59
1"1/4 BSP	1"1/4	Z128220	58,53
1"1/2 BSP	1"1/2	Z128224	80,56
2" BSP	2"	Z128232	116,74

Hembra giratoria 90° prensada soldable BSP asiento plano

Welding BSP Female 90° flat seat swept

Femelle tournante à souder 90° BSP fond plat

Femmina 90° girevole a saldare BSP faccia piana

ROSCA THREAD	DN	Referencia Part n°	€
1/4" BSP	1/4"	Z103904	34,83
3/8" BSP	3/8"	Z103906	40,90
1/2" BSP	1/2"	Z103908	34,30
3/4" BSP	3/4"	Z103912	56,28
1" BSP	1"	Z103916	66,91
1"1/4 BSP	1"1/4	Z103920	149,28
1"1/2 BSP	1"1/2	Z103924	154,72
2" BSP	2"	Z103932	166,88

RACORES SOLDABLES

Welding fittings
Embouts à souder
Raccordi a saldare

Hembra giratoria 45° prensada soldable BSP asiento plano

Welding BSP Female 45° flat seat swept

Femelle tournante à souder 45° BSP fond plat

Femmina 45° girevole a saldare BSP faccia piana

ROSCA THREAD	DN	Referencia Part n°	€
1/4" BSP	1/4"	**Z104004**	**24,51**
3/8" BSP	3/8"	**Z104006**	**25,34**
1/2" BSP	1/2"	**Z104008**	**34,92**
3/4" BSP	3/4"	**Z104012**	**49,55**
1" BSP	1"	**Z104016**	**60,97**
1"1/4 BSP	1"1/4	**Z104020**	**90,37**
1"1/2 BSP	1"1/2	**Z104024**	**140,50**
2" BSP	2"	**Z104032**	**164,28**

Hembra giratoria prensada soldable JIC 37° con guía

Welding JIC female 37° swept with guide

Femelle tournante JIC 37° à souder avec guide

Femmina girevole a saldare JIC 37°

ROSCA THREAD	DN	Referencia Part n°	€
7/16" 20h UNF	1/4"	**Z12830704**	**19,31**
1/2" 20h UNF	1/4"	**Z12830804**	**15,53**
9/16" 18h UNF	3/8"	**Z12830906**	**15,97**
3/4" 16h UNF	3/8"	**Z12831206**	**17,74**
3/4" 16h UNF	1/2"	**Z12831208**	**17,15**
7/8" 14h UNF	1/2"	**Z12831408**	**18,82**
1"1/16 12h UN	3/4"	**Z12831712**	**22,63**
1"5/16 12h UN	1"	**Z12832116**	**31,30**
1"5/8 12h UN	1"1/4	**Z12832620**	**59,19**
1"7/8 12h UN	1"1/2	**Z12833024**	**87,71**

Macho soldable JIC 37° con guía

Welding fixed male JIC 37° with guide

Mâle à souder JIC 37° avec guide

Maschio JIC 37° a saldare

ROSCA THREAD	DN		Referencia Part n°	€
7/16" 20h UNF	1/4"		**Z10360704**	**21,09**
1/2" 20h UNF	1/4"		**Z10360804**	**12,49**
9/16" 18h UNF	3/8"		**Z10360906**	**15,92**
3/4" 16h UNF	3/8"		**Z10361206**	**17,94**
3/4" 16h UNF	1/2"		**Z10361208**	**17,54**
7/8" 14h UNF	1/2"		**Z10361408**	**19,20**
7/8" 14h UNF	5/8"		**Z10361410**	**20,15**
1"1/16 12h UN	3/4"		**Z10361712**	**25,20**
1"5/16 12h UN	1"		**Z10362116**	**33,02**
1"5/8 12h UN	1"1/4		**Z10362620**	**52,22**
1"7/8 12h UN	1"1/4		**Z10363020**	**84,09**
2" 1/2 12h UN	2"	NEW	**Z10364032**	**102,39**

Hembra giratoria 90° prensada soldable JIC 37°

Welding 90° JIC Female 37° swept

Femelle tournante à souder 90° JIC 37°

Femmina 90° girevole a saldare JIC

ROSCA THREAD	DN	Referencia Part n°	€
7/16" 20h UNF	1/4"	**Z10410704**	**24,66**
1/2" 20h UNF	1/4"	**Z10410804**	**24,19**
9/16" 18h UNF	3/8"	**Z10410906**	**27,42**
3/4" 16h UNF	1/2"	**Z10411208**	**34,02**
7/8" 14h UNF	1/2"	**Z10411408**	**34,50**
1"1/16 12h UN	3/4"	**Z10411712**	**54,12**
1"5/16 12h UN	1"	**Z10412116**	**64,79**
1"5/8 12h UN	1"1/4	**Z10412620**	**103,54**
1"7/8 12h UN	1"1/2	**Z10413024**	**175,53**

Hembra giratoria 45° prensada soldable JIC 37°

Welding 45° JIC Female 37° swept

Femelle tournante à souder 45° JIC 37°

Femmina 45° girevole a saldare JIC

ROSCA THREAD	DN	Referencia Part n°	€
7/16" 20h UNF	1/4"	**Z10420704**	**25,61**
1/2" 20h UNF	1/4"	**Z10420804**	**26,13**
9/16" 18h UNF	3/8"	**Z10420906**	**26,51**
3/4" 16h UNF	1/2"	**Z10421208**	**27,04**
7/8" 14h UNF	1/2"	**Z10421408**	**29,39**
1"1/16 12h UN	3/4"	**Z10421712**	**50,13**
1"5/16 12h UN	1"	**Z10422116**	**66,93**
1"5/8 12h UN	1"1/4	**Z10422620**	**111,82**
1"7/8 12h UN	1"1/2	**Z10423024**	**182,28**

RACORES SOLDABLES

Welding fittings
Embouts à souder
Raccordi a saldare

Tuercas Métricas

DIN nut

Écrou DIN

Dado DIN

TUBO PIPE	ROSCA THREAD	Referencia Part n°	€
6	M12X1.5	Z10510612	2,76
6	M14X1.5	Z10510614	3,03
8	M14X1.5	Z10510814	2,97
8	M16X1.5	Z10510816	3,41
10	M16X1.5	Z10511016	3,33
10	M18X1.5	Z10511018	4,09
12	M18X1.5	Z10511218	3,69
12	M20X1.5	Z10511220	4,54
14	M22X1.5	Z10511422	7,39
15	M22X1.5	Z10511522	5,34
16	M24X1.5	Z10511624	8,20
18	M26X1.5	Z10511826	8,29
20	M30X2	Z10512030	12,50
22	M30X2	Z10512230	10,77
25	M36X2	Z10512536	29,52
28	M36X2	Z10512836	22,16
30	M42X2	Z10513042	35,83
35	M45X2	Z10513545	34,66
38	M52X2	Z10513852	56,21
42	M52X2	Z10514252	42,10

Boquilla para soldar cono metal

Welding metal cone nipple

Raccord collet cône métallique à souder

Ogiva a saldare senza o'ring

TUBO PIPE	SERIE	Referencia Part n°	€
15X2,5	L	Z CMORIL 15	14,95
18X2,5	L	Z CMORIL 18	15,84
22X2,5	L	Z CMORIL 22	19,96
28X3	L	Z CMORIL 28	23,49
35X4	L	Z CMORIL 35	38,91
42X3	L	Z CMORIL 42	61,72
6X2	L/S	Z CMORIS 6	7,27
8X2	L/S	Z CMORIS 8	9,39
10X2	L/S	Z CMORIS 10	8,87
12X2	L/S	Z CMORIS 12	10,55
14X3	S	Z CMORIS 14	11,38
16X3	S	Z CMORIS 16	15,25
20X3	S	Z CMORIS 20	17,48
25X4	S	Z CMORIS 25	27,28
30X5	S	Z CMORIS 30	29,86
38X5	S	Z CMORIS 38	43,78

En caso de querer la pieza con junta, ver pág. 124 / *If you want the item with o'ring, please see page 124* / Si vous voulez la pièce avec le joint, voir page 124 / *En caso de querer la pieza con junta, ver pág. 124*

Espiga lisa métrica recta

Welding metric standpipe

Embout lisse métrique à souder

Estremità tubolare metrica diritta

Ø EXT. Ø OUTER	Ø INT. Ø INNER	Referencia Part n°	€
10	7	KZL0010	7,93
12	9	KZL0012	8,20
14	10	KZL0014	11,31
15	12	KZL0015	10,84
16	12	KZL0016	12,27
18	14	KZL0018	16,03
20	14	KZL0020	19,27
22	18	KZL0022	20,57

Espiga lisa métrica 90°

Welding metric standpipe 90°

Embout lisse métrique 90° à souder

Estremità tubolare metrica a 90°

Ø EXT. Ø OUTER	Ø INT. Ø INNER	Referencia Part n°	€
6	4	KZC9006	7,73
8	4	KZC9008	11,28
10	6	KZC9010	11,37
12	8	KZC9012	11,87
15	11	KZC9015	15,13
18	14	KZC9018	20,29
20	12	KZC9020	23,90
22	18	KZC9022	27,85

Espiga lisa métrica 45°

Welding metric standpipe 45°

Embout lisse métrique 45° à souder

Estremità tubolare metrica a 45°

Ø EXT. Ø OUTER	Ø INT. Ø INNER	Referencia Part n°	€
6	4	KZC4506	7,73
8	4	KZC4508	11,28
10	6	KZC4510	11,37
12	8	KZC4512	11,87
14	10	KZC4514	13,94
15	11	KZC4515	15,13
16	11	KZC4516	17,54
18	14	KZC4518	20,29
20	12	KZC4520	23,91
22	18	KZC4522	27,85

RACORES SOLDABLES

Welding fittings
Embouts à souder
Raccordi a saldare

Hembra giratoria 90° soldable métrica

Weldable metrical swivel female 90°

Femelle tournante 90° métrique à souder

Femmina girevole 90° metrica a saldare

TUBO PIPE	ROSCA THREAD	Referencia Part n°	€
10	M16X1.5	Z10521610	31,45
12	M18X1.5	Z10521812	30,06
15	M22X1.5	Z10522215	31,59
18	M26X1.5	Z10522618	45,14
22	M30X2	Z10523022	55,77
28	M36X2	Z10523628	79,01
42	M52X2	Z10525242	183,02
12	M20X1.5	Z10522012	34,91
20	M30X2	Z10523020	51,21

Hembra giratoria 90° soldable métrica sin junta

NEW

Weldable metrical swivel female 90° without o´ring

Femelle tournante 90° métrique à souder sans joint

Femmina girevole 90° metrica a saldare senza guarnizione

TUBO PIPE	ROSCA THREAD	Referencia Part n°	€
6	M12X1.5	Z10541206	21,81
8	M14X1.5	Z10541408	22,42
10	M16X1.5	Z10541610	30,50
12	M18X1.5	Z10541812	24,83
15	M22X1.5	Z10542215	30,64
18	M26X1.5	Z10542618	43,79
22	M30X2	Z10543022	54,09
28	M36X2	Z10543628	76,64
35	M45X2	Z10544535	134,32
42	M52X2	Z10545242	177,53
6	M14X1.5	Z10541406	22,82
8	M16X1.5	Z10541608	24,46
10	M18X1.5	Z10541810	23,66
12	M20X1.5	Z10542012	33,86
14	M22X1.5	Z10542214	28,60
16	M24X1.5	Z10542416	40,77
20	M30X2	Z10543020	49,68
25	M36X2	Z10543625	75,28
30	M42X2	Z10544230	110,72
38	M52X2	Z10545238	168,53

Hembra giratoria 45° soldable métrica

Weldable metrical swivel female 45°

Femelle tournante 45° métrique à souder

Femmina girevole 45° metrica a saldare

TUBO PIPE	ROSCA THREAD	Referencia Part n°	€
10	M16X1.5	Z10531610	27,67
12	M18X1.5	Z10531812	27,64
15	M22X1.5	Z10532215	34,11
22	M30X2	Z10533022	60,22
28	M36X2	Z10533628	82,05
42	M52X2	Z10535242	197,66
20	M30X2	Z10533020	55,31

Hembra giratoria 45° soldable métrica sin junta

NEW

Weldable metrical swivel female 45° without o´ring

Femelle tournante 45° métrique à souder sans joint

Femmina girevole 45° metrica a saldare senza guarnizione

TUBO PIPE	ROSCA THREAD	Referencia Part n°	€
6	M12X1.5	Z10551206	23,56
8	M14X1.5	Z10551408	24,21
10	M16X1.5	Z10551610	32,94
12	M18X1.5	Z10551812	26,82
15	M22X1.5	Z10552215	33,09
18	M26X1.5	Z10552618	47,29
22	M30X2	Z10553022	58,42
28	M36X2	Z10553628	82,77
35	M45X2	Z10554535	145,06
42	M52X2	Z10555242	191,73
6	M14X1.5	Z10551406	24,64
8	M16X1.5	Z10551608	26,42
10	M18X1.5	Z10551810	25,55
12	M20X1.5	Z10552012	36,57
14	M22X1.5	Z10552214	30,89
16	M24X1.5	Z10552416	44,04
20	M30X2	Z10553020	53,65
25	M36X2	Z10553625	81,30
30	M42X2	Z10554230	119,58
38	M52X2	Z10555238	182,01

Macho soldable Métrico

Welding DIN Male

Male métrique à souder

Maschio saldare DIN

TUBO PIPE	SERIE	Referencia Part n°	€
6	L	Z1050L06	7,60
8	L	Z1050L08	10,04
10	L	Z1050L10	9,83
12	L	Z1050L12	10,67
15	L	Z1050L15	16,83
18	L	Z1050L18	20,63
22	L	Z1050L22	31,58
28	L	Z1050L28	38,10
35	L	Z1050L35	61,87
42	L	Z1050L42	75,86
6	S	Z1050S06	9,46
8	S	Z1050S08	12,54
10	S	Z1050S10	14,46
12	S	Z1050S12	20,95
14	S	Z1050S14	22,20
16	S	Z1050S16	21,86
20	S	Z1050S20	26,57
25	S	Z1050S25	35,77
30	S	Z1050S30	53,62
38	S	Z1050S38	103,41

RACORES SOLDABLES

Welding fittings
Embouts à souder
Raccordi a saldare

Tuercas BSP Microfundido AISI-316

Micro-casting BSP nuts AISI-316

Écrous BSP en acier moulé AISI-316

Dadi BSP microfusi AISI-316

ROSCA THREAD	Referencia Part n°	€
2" 1/2 BSP	**Z127040**	**121,95**
3" BSP	**Z127048**	**159,12**
4" BSP	**Z127064**	**202,89**

Macho BSPT soldar microfundido AISI-316

Micro-casting BSPT welding male AISI-316

Mâle BSPT à souder en acier moulé AISI-316

Maschio BSPT a saldare microfuso AISI-316

DN DN	ROSCA	Referencia Part n°	€
2"1/2	2"1/2 BSPT	**ZM103240**	**130,61**
3"	3" BSPT	**ZM103248**	**160,14**
4"	4" BSPT	**ZM103264**	**206,13**

Cono ajuste BSP 60° con guía

Welding nipple with 60° cone for BSP nut with guide

Collet à souder BSP cone 60° avec guide

Ogiva a saldare cono 60° con guida per dado BSP

DN DN	ROSCA	Referencia Part n°	€
2"1/2	2"1/2 BSP	**Z127840**	**99,26**
3"	3" BSP	**Z127848**	**125,57**
4"	4" BSP	**Z127864**	**229,37**

RACORES SOLDABLES

Welding fittings
Embouts à souder
Raccordi a saldare

Tuerca cono ajuste BSP

BSP Nut for welding 60° cone nipple

Écrou gaz pour collet à souder

Dado BSP per ogiva a saldare cono 60°

ROSCA THREAD	Referencia Part n°	€
1/4" BSP	**Z127004**	**4,20**
3/8" BSP	**Z127006**	**6,03**
1/2" BSP	**Z127008**	**5,19**
3/4" BSP	**Z127012**	**7,71**
1" BSP	**Z127016**	**13,45**
1"1/4 BSP	**Z127020**	**29,05**
1"1/2 BSP	**Z127024**	**36,46**
2" BSP	**Z127032**	**56,18**

Cono ajuste BSP 60°

Welding nipple BSP 60°

Collet à souder BSP cone 60°

Ogiva a saldare BSP

ROSCA THREAD	Referencia Part n°	€
1/4" BSP	**Z127304**	**4,47**
3/8" BSP	**Z127306**	**4,47**
1/2" BSP	**Z127308**	**6,36**
3/4" BSP	**Z127312**	**7,64**
1" BSP	**Z127316**	**12,77**
1"1/4 BSP	**Z127320**	**21,55**
1"1/2 BSP	**Z127324**	**38,98**
2" BSP	**Z127332**	**47,92**

Cono ajuste BSP asiento plano

Welding nipple BSP flat seat

Collet à souder BSP fond plat

Ogiva a saldare sede piana

THREAD ROSCA	Ø OUTER Ø EXT.	Part n° Referencia	€
1/2 BSP	16	**Z127408**	**10,09**
1"1/4 BSP	33	**Z127420**	**24,36**
2" BSP	52,4	**Z127432**	**48,20**
1"1/4 BSP	33	**Z127920**	**24,36**

Hasta fin de existencias / *Until end of stock* / Jusqu´à la fin du stock / *Fino ad esaurimento*

Z127920 con guia. / *Z127920 with guide* / Z127920 avec guide. / *Z127920 con guida*

Cono ajuste JIC 37° con guía

Welding nipple for JIC 37° with guide

Collet à souder femelle JIC cone 37° avec guide

Ogiva a saldare cono JIC 37° con guida

ROSCA THREAD	DN	Referencia Part n°	€
7/16" 20h UNF	1/4"	**Z12770704**	**9,32**
1/2" 20h UNF	1/4"	**Z12770804**	**9,92**
9/16" 18h UNF	3/8"	**Z12770906**	**7,53**
3/4" 16h UNF	3/8"	**Z12771206**	**8,65**
7/8" 14h UNF	5/8"	**Z12771410**	**8,83**
1"1/16 12h UN	3/4"	**Z12771712**	**13,63**

Hasta fin de existencias / *Until end of stock* / Jusqu´à la fin du stock / *Fino ad esaurimento*

Tuercas JIC 37°

Nut JIC 37°

Écrou JIC 37°

Dado JIC

TUBO PIPE		ROSCA THREAD	Referencia Part n°	€
6	1/4"	7/16" 20h UNF	**ZS11006**	*
8	5/16"	1/2" 20h UNF	**ZS11008**	*
10	3/8"	9/16" 18h UNF	**ZS11010**	*
12	1/2"	3/4" 16h UNF	**ZS11012**	*
14-15-16	5/8"	7/8" 14h UNF	**ZS11016**	*
18-20	-	1"1/16 12h UN	**ZS11020**	*
-	3/4"	1"1/16 12h UNF	**ZS11020W**	*
25	1"	1"5/16 12h UN	**ZS11025**	*
30-32	1 1/4"	1"5/8 12h UN	**ZS11032**	*
38	1 1/2"	1"7/8 12h UN	**ZS11038**	*

***Ver precios en p.131 (R.JIC)** / **See prices p. 131 (R.JIC)* / *Voir prix p. 131 (R.JIC) / **Vedere prezzi p. 131 (R.JIC)*

RACORES SOLDABLES

Welding fittings
Embouts à souder
Raccordi a saldare

Unión 3 piezas hembra-soldar FIG.340HS microfundido

Union 3 fem. welding pieces fig.340hs micro-casting

Union 3 pcs fem. à souder fig.340hs acier moulé

Unione a 3 pezzi f.saldare fig.340hs microfusione

ROSCA THREAD	Referencia Part n°	€
1/4"	ZFIG34004HS	*
3/8"	ZFIG34006HS	*
1/2"	ZFIG34008HS	*
3/4"	ZFIG34012HS	*
1"	ZFIG34016HS	*
1" 1/4	ZFIG34020HS	*
1" 1/2	ZFIG34024HS	*
2"	ZFIG34032HS	*

***Ver precios en p.235** / **See prices p. 235* / *Voir prix p. 235 / **Vedere prezzi p. 235*

Unión 3 piezas soldar FIG.340S microfundido

Union 3 welding pieces fig. 340s micro-casting

Union 3 pièces à souder fig. 340s acier moulé

Unione a 3 pezzi a saldare fig.340s microfusione

DN	Referencia Part n°	€
1/4"	ZFIG34004S	*
3/8"	ZFIG34006S	*
1/2"	ZFIG34008S	*
3/4"	ZFIG34012S	*
1"	ZFIG34016S	*
1" 1/4	ZFIG34020S	*
1" 1/2	ZFIG34024S	*
2"	ZFIG34032S	*

***Ver precios en p.235** / **See prices p. 235* / *Voir prix p. 235 / **Vedere prezzi p. 235*

Unión 3 piezas macho-soldar FIG.341MS microfundido

Union 3 welding male pieces fig.341ms micro-casting

Union 3 pcs mâle à souder fig.341ms acier moulé

Unione a 3 pezzi m.saldare fig.341ms microfusione

ROSCA THREAD	Referencia Part n°	€
1/4"	ZFIG34104MS	*
3/8"	ZFIG34106MS	*
1/2"	ZFIG34108MS	*
3/4"	ZFIG34112MS	*
1"	ZFIG34116MS	*
1" 1/4	ZFIG34120MS	*
1" 1/2	ZFIG34124MS	*
2"	ZFIG34132MS	*

***Ver precios en p.235** / **See prices p. 235* / *Voir prix p. 235 / **Vedere prezzi p. 235*

BRIDAS SOLDABLES

Welding flanges
Brides à souder
Flangia a saldare

Brida fija soldable PN10/16 DIN 2633

Welding forged flange DIN 2633 PN 10/16

Bride fixe à souder DIN 2633 PN10/16

Flangia forgiata a saldare DIN 2633 PN 10/16

DN	Referencia Part n°	€
15-1/2"	ZBPN16263308	33,52
20-3/4"	ZBPN16263312	44,64
25-1"	ZBPN16263316	58,79
32-1"1/4	ZBPN16263320	79,42
40-1"1/2	ZBPN16263324	94,37
50-2"	ZBPN16263332	125,79
65-2"1/2	ZBPN16263340	143,80
80-3"	ZBPN16263348	151,37
100-4"	ZBPN16263364	223,68

Brida fija ANSI-ASA 150 LBS

Flange ANSI-ASA Welding Neck 150 LBS

Bride ANSI-ASA Welding Neck 150 LBS

Flangia ANSI-ASA a saldare 150 LBS

DN	Referencia Part n°	€
15-1/2"	ZBANSAWN15008	26,33
20-3/4"	ZBANSAWN15012	37,61
25-1"	ZBANSAWN15016	53,09
32-1"1/4	ZBANSAWN15020	65,50
40-1"1/2	ZBANSAWN15024	84,91
50-2"	ZBANSAWN15032	126,03
65-2"1/2	ZBANSAWN15040	200,09
80-3"	ZBANSAWN15048	247,13
100-4"	ZBANSAWN15064	332,45

Brida fija soldable PN40 DIN 2635

Welding forged flange DIN 2635 PN 40

Bride fixe à souder DIN 2635 PN 40

Flangia forgiata a saldare DIN 2635 PN 40

DN	Referencia Part n°	€
15-1/2"	ZBPN40263508	33,86
20-3/4"	ZBPN40263512	49,80
25-1"	ZBPN40263516	60,64
32-1"1/4	ZBPN40263520	84,91
40-1"1/2	ZBPN40263524	109,47
50-2"	ZBPN40263532	132,50
65-2"1/2	ZBPN40263540	175,72
80-3"	ZBPN40263548	214,62
100-4"	ZBPN40263564	294,57

Brida fija ANSI-ASA 350 LBS

FLANGE ANSI-ASA Welding Neck 300 LBS

Bride ANSI-ASA Welding Neck 300 LBS

Flangia ANSI-ASA a saldare 300 LBS

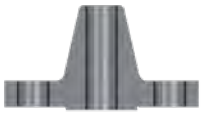

DN	Referencia Part n°	€
15-1/2"	ZBANSAWN30008	39,49
20-3/4"	ZBANSAWN30012	65,27
25-1"	ZBANSAWN30016	82,26
32-1"1/4	ZBANSAWN30020	99,87
40-1"1/2	ZBANSAWN30024	147,53
50-2"	ZBANSAWN30032	173,41
65-2"1/2	ZBANSAWN30040	251,14
80-3"	ZBANSAWN30048	332,02
100-4"	ZBANSAWN30064	539,38

BRIDAS SOLDABLES

Welding flanges
Brides à souder
Flangia a saldare

Brida loca PN10 DIN 2642

Welding forged slip on flange DIN 2642 PN 10

Bride tournante à souder DIN 2642 PN 10

Flangia girevole a saldare DIN 2642 PN 10

DN	Referencia Part n°	€
15-1/2"	ZBPN10264208	27,92
20-3/4"	ZBPN10264212	34,15
25-1"	ZBPN10264216	59,27
32-1"1/4	ZBPN10264220	67,85
40-1"1/2	ZBPN10264224	75,53
50-2"	ZBPN10264232	89,05
65-2"1/2	ZBPN10264240	134,04
80-3"	ZBPN10264248	185,10
100-4"	ZBPN10264264	227,95

Aro para brida DIN 2642

Ring for flange DIN 2642

Collet épais pour bride DIN 2642

Anello per flangia DIN 2642

DN	Referencia Part n°	€
1/2"	ZABARO264208	13,85
3/4"	ZABARO264212	30,23
1"	ZABARO264216	38,98
1"1/4	ZABARO264220	48,59
1"1/2	ZABARO264224	60,13
2"	ZABARO264232	45,76
2"1/2	ZABARO264240	147,26
3"	ZABARO264248	243,48
4"	ZABARO264264	239,02

Tubo para soldar bridas ANSI-DIN

Tube for welding flanges ANSI-DIN

Tube à souder brides ANSI-DIN

Tubo per flangia a saldare ANSI-DIN

DN	Referencia Part n°	€
3/8"	ZBTUBO06	6,39
1/2"	ZBTUBO08	10,33
3/4"	ZBTUBO12	8,81
1"	ZBTUBO16	9,72
1"1/4	ZBTUBO20	12,35
1"1/2	ZBTUBO24	15,43
2"	ZBTUBO32	21,67
2"1/2	ZBTUBO40	21,27
3"	ZBTUBO48	29,82
4"	ZBTUBO64	40,19

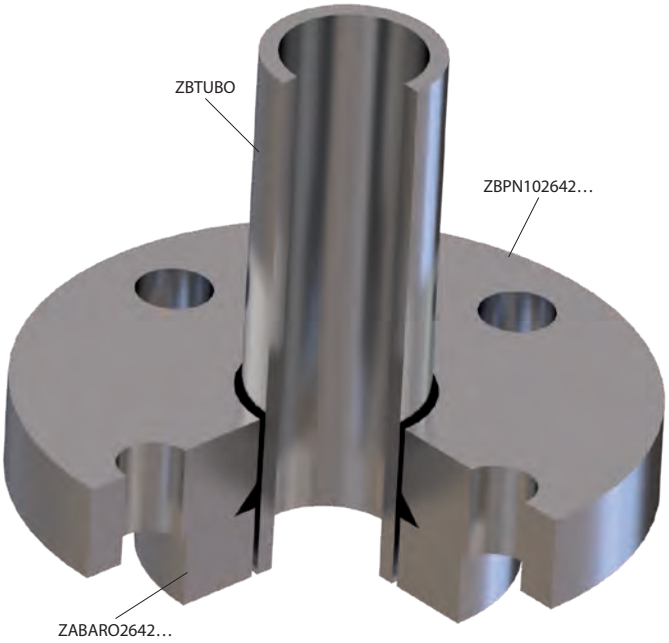

BRIDAS SOLDABLES

Welding flanges
Brides à souder
Flangia a saldare

Brida plana PN40 DIN 2656

Welding forged flange DIN 2656 PN 40

Bride tournante à souder DIN 2656 PN 40

Flangia girevole a saldare DIN 2656 PN 40

DN	Referencia Part n°	€
15-1/2"	ZBPN40265608	32,10
20-3/4"	ZBPN40265612	38,68
25-1"	ZBPN40265616	47,13
32-1"1/4	ZBPN40265620	76,56
40-1"1/2	ZBPN40265624	86,62
50-2"	ZBPN40265632	113,21
65-2"1/2	ZBPN40265640	123,72
80-3"	ZBPN40265648	161,49
100-4"	ZBPN40265664	209,32

Aro para brida DIN 2656

Ring for flange DIN 2656

Collet épais pour bride DIN 2656

Anello per flangia DIN 2656

DN	Referencia Part n°	€
1/2"	ZABARO265608	16,00
3/4"	ZABARO265612	32,40
1"	ZABARO265616	41,75
1"1/4	ZABARO265620	49,84
1"1/2	ZABARO265624	65,63
2"	ZABARO265632	94,07
2"1/2	ZABARO265640	132,50
3"	ZABARO265648	168,13

Tubo para soldar bridas ANSI-DIN

Tube for welding flanges ANSI-DIN

Tube à souder brides ANSI-DIN

Tubo per flangia a saldare ANSI-DIN

	Referencia Part n°	€
3/8"	ZBTUBO06	6,39
1/2"	ZBTUBO08	10,33
3/4"	ZBTUBO12	8,81
1"	ZBTUBO16	9,72
1"1/4	ZBTUBO20	12,35
1"1/2	ZBTUBO24	15,43
2"	ZBTUBO32	21,67
2"1/2	ZBTUBO40	21,27
3"	ZBTUBO48	29,82
4"	ZBTUBO64	40,19

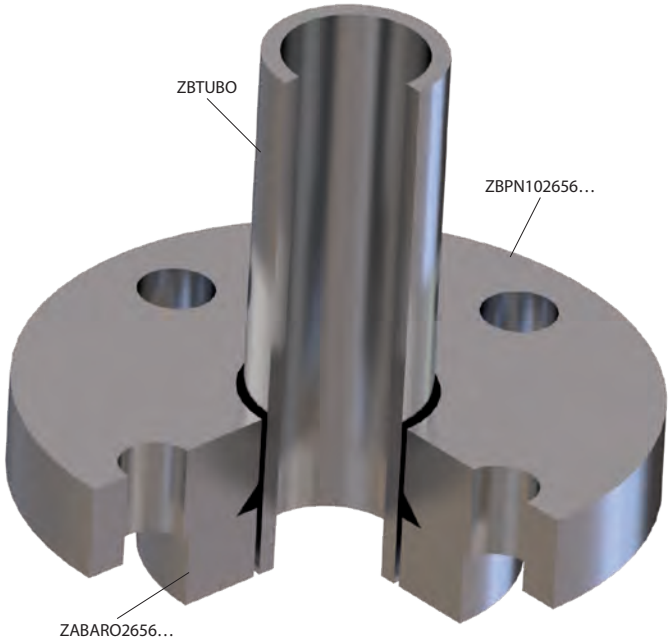

BRIDAS SOLDABLES

Welding flanges
Brides à souder
Flangia a saldare

Brida plana ANSI-ASA 150 LBS

Swivel flange ANSI-ASA 150 LBS

Bride tournante ANSI-ASA 150 LBS

Flangia girevole ANSI-ASA 150 LBS

DN	Referencia Part n°	€
15-1/2"	ZBANSASO15008	19,39
20-3/4"	ZBANSASO15012	26,85
25-1"	ZBANSASO15016	37,00
32-1"1/4	ZBANSASO15020	46,09
40-1"1/2	ZBANSASO15024	62,08
50-2"	ZBANSASO15032	96,39
65-2"1/2	ZBANSASO15040	143,48
80-3"	ZBANSASO15048	183,55
100-4"	ZBANSASO15064	246,42

Brida plana ANSI-ASA 300 LBS

Swivel flange ANSI-ASA 300 LBS

Bride tournante ANSI-ASA 300 LBS

Flangia girevole ANSI-ASA 300 LBS

DN	Referencia Part n°	€
15-1/2"	ZBANSASO30008	30,77
20-3/4"	ZBANSASO30012	50,80
25-1"	ZBANSASO30016	64,74
32-1"1/4	ZBANSASO30020	76,18
40-1"1/2	ZBANSASO30024	116,58
50-2"	ZBANSASO30032	135,97
65-2"1/2	ZBANSASO30040	199,31
80-3"	ZBANSASO30048	445,90

Aro para brida ANSI-ASA

Ring for flange ANSI-ASA

Collet épais pour bride ANSI-ASA

Anello per flangia ANSI-ASA

DN	Referencia Part n°	€
1/2"	ZABAROANSA08	6,82
3/4"	ZABAROANSA12	8,92
1"	ZABAROANSA16	10,69
1"1/4	ZABAROANSA20	15,50
1"1/2	ZABAROANSA24	20,85
2"	ZABAROANSA32	53,88
2"1/2	ZABAROANSA40	41,79
3"	ZABAROANSA48	59,61
4"	ZABAROANSA64	85,18

Tubo para soldar bridas ANSI-DIN

Tube for welding flanges ANSI-DIN

Tube à souder brides ANSI-DIN

Tubo per flangia a saldare ANSI-DIN

	Referencia Part n°	€
3/8"	ZBTUBO06	6,39
1/2"	ZBTUBO08	10,33
3/4"	ZBTUBO12	8,81
1"	ZBTUBO16	9,72
1"1/4	ZBTUBO20	12,35
1"1/2	ZBTUBO24	15,43
2"	ZBTUBO32	21,67
2"1/2	ZBTUBO40	21,27
3"	ZBTUBO48	29,82
4"	ZBTUBO64	40,19

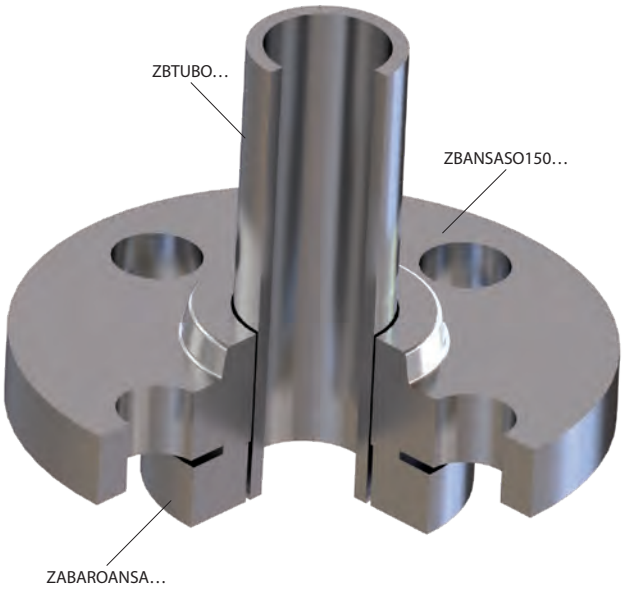

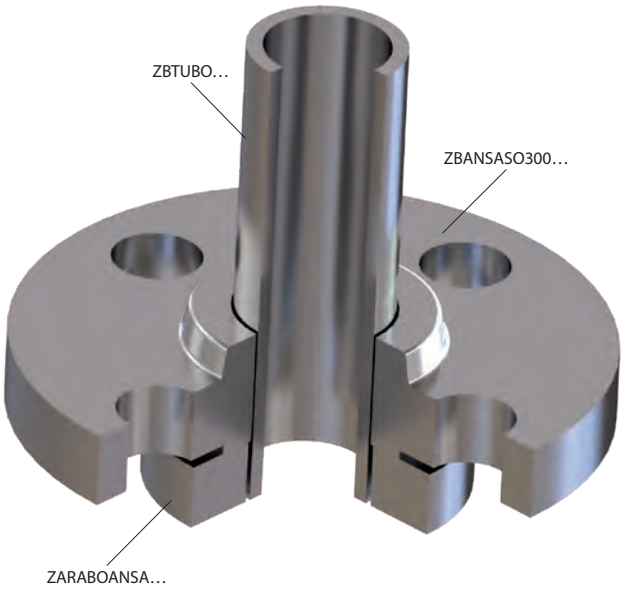

A HUNDRED HEADS. ONE MIND.

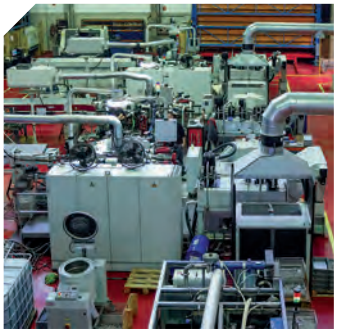

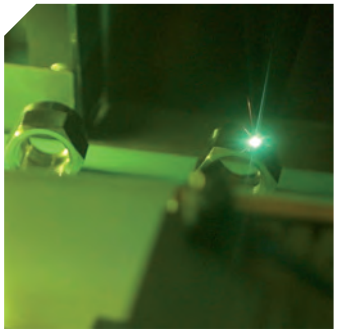
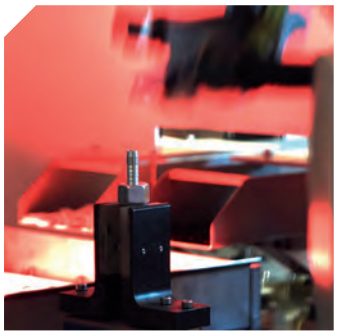

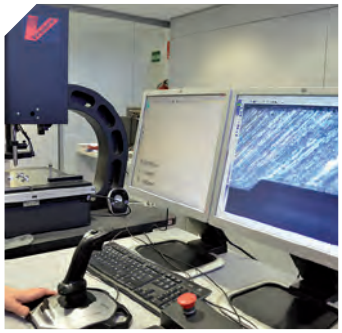

FABRICACIÓN · MANUFACTURE
LOGÍSTICA · LOGISTICS
ÁREA CALIDAD · QUALITY DEPARTMENT
ÁREA TÉCNICA · TECHNICAL DEPARTMENT
TALLER HIDRÁULICA · HYDRAULIC WORKSHOP
TALLER LATIGUILLOS · HOSE ASSEMBLY WORKSHOP
TALLER SOLDADURA · WELDING WORKSHOP
SERVICIOS COMERCIALES · COMMERCIAL SERVICES
PLATAFORMA DIGITAL · DIGITAL PLATFORM

www.dicsaes.com

RACORES INDUSTRIA ALIMENTARIA 217

Food industry fittings
Raccords alimentaires
Raccordi alimentari

SERIE CAMLOCK DIN 2828 224

DIN 2828 Camlock Fittings
Raccords Camlock DIN 2828
Camlock DIN 2828

ACOPLES GUILLEMIN NF E-29572 228

GUILLEMIN NF E-29572 Fittings
Raccords GUILLEMIN NF E-29572
Raccordi GUILLEMIN NF E-29572

ACOPLES TW (TANKWAGEN) DIN 28450 230

TW (Tankwagen) DIN 28450 Fittings
Raccords TW (Tankwagen) DIN 28450
Raccordi TW (Tankwagen) DIN 28450

ACCESORIOS INOX PARA RACOR INDUSTRIAL 231

Stainless Steel accessories for industrial fitting
Accessoires acier inox pour raccord industriel
Accessori in acciaio inossidabile per raccordo industriale

RACORES BAJA PRESIÓN 150 LBS 232

Screw low pressure fittings 150 LBS
Raccords basse pression 150 LBS
Raccordi bassa pressione 150 LBS

06

RACORES INDUSTRIALES

Industrial fittings
Raccords industriels
Raccordi industriali

RACORES INDUSTRIA ALIMENTARIA

Food industry fittings
Raccords alimentaires
Raccordi alimentari

Casquillos para prensar ▪ Crimping ferrules ▪ Jupes à sertir ▪ Boccole a pressare | 217

81042

Racores SMS ▪ SMS Unions ▪ Raccords SMS ▪ Raccordi SMS | 218

ZRA200

ZRA212

ZSMS H

ZSMS S

ZSMS M

Z SMS BN

JSMSS

JSMSP

Racores Tri-Clamp ▪ Clamp Unions ▪ Raccords Tri-Clamp ▪ Raccordi Tri-Clamp | 220

ZTC

ZC

JCLAMPS

JCLAMPP

ZAC1P

ZPC

Racores DIN 11851 ▪ DIN 11851 Unions ▪ Raccords DIN 11851 ▪ Raccordi DIN 11851 | 221

ZRA100

ZRA112

ZDIN H

Z DIN BN

ZDIN S

ZDIN M

JDINS

JDINP

Racores Macon ▪ Macon Unions ▪ Raccords Macon ▪ Raccordi Macon | 222

ZRA300

ZRA312

ZMAC H

Racores alimentarios para manguera PTFE Serie STD ▪ Food industry fittings for PTFE hose STD Series ▪ Raccords alimentaires pour tuyau PTFE Série STD ▪ Raccordi alimentari per tubo PTFE Serie STD | 223

ZRA250

ZRA150

ZRA252

ZRA152

ZTCS

81040

81041

SERIE CAMLOCK DIN 2828

DIN 2828 Camlock Fittings
Raccords Camlock DIN 2828
Camlock DIN 2828

Racores Camlock AISI 316 ▪ Camlock Unions AISI 316 ▪ Raccords Camlock AISI 316 ▪ Raccordi Camlock AISI 316 | 224

ZA

ZB

ZC

ZD

ZE

ZF

ZDC

ZDP

JCAMNBR

ZABW

ZDBW

JCAMS

ZA..NPT

ZB..NPT

ZD..NPT

ZF..NPT

SERIE AUTOLOCK AISI 316

Autolock Unions AISI 316
Raccords Autolock AISI 316
Raccordi Autolock AISI 316

Racores Autolock AISI 316 ▪ Autolock Unions AISI 316 ▪ Raccords Autolock AISI 316 ▪ Raccordi Autolock AISI 316 | 227

ZB S

ZC S

ZD S

ZDC S

GUILLEMIN

GUILLEMIN Stainless Steel
GUILLEMIN acier inox
GUILLEMIN acciao inossidabile

GUILLEMIN inox ▪ GUILLEMIN Stainless Steel ▪ GUILLEMIN acier inox ▪ GUILLEMIN acciao inossidabile | 228

ZGU01C

ZGU02C

ZGU04C

ZGU01S

ZGU02S

ZGU03C

ZGU05C

ZGU06C

TW (TANKWAGEN)

TW Stainless Steel
TW acier inox
TW Acciao Inossidabile

TW (Tankwagen) inox ▪ TW Stainless Steel ▪ TW acier inox ▪ TW Acciao Inossidabile | 230

ZMK

ZVK

ZMB

ZVB

ZMKS

ZVKS

ACCESORIOS INOX PARA RACOR INDUSTRIAL

Stainless Steel accessories for industrial fitting
Accessoires acier inox pour raccord industriel
Accessori in acciaio inossidabile per raccordo industriale

Campana inox para racor industrial ▪ Stainless Steel Crimping Ferrule for industrial fitting ▪ Jupe pour raccord industriel acier inox ▪ Boccola in acciaio inossidabile per raccordo industriale 231

ZCA

Abrazadera inox para racor industrial ▪ Stainless Steel clamp for industrial fitting ▪ Collier pour raccord industriel acier inox ▪ Collare in acciao inossidabile per raccordo industriale 231

ZAB01

ZAB02

RACORES BAJA PRESIÓN 150 LBS

Screw low pressure fittings 150 LBS
Raccords basse pression 150 LBS
Raccordi bassa pressione 150 LBS

150 LBS Microfundido ▪ Screwed fittings low pressure 150 LBS ▪ Adapteurs basse pression 150 LBS ▪ Raccordi bassa pressione 232

ZFIG399

ZFIG150

ZFIG290

ZFIG280

ZFIG245

ZFIG312

ZFIG300

ZFIG270

ZFIG291

ZFIG301

ZFIG241

ZFIG531

ZFIG240

ZFIG090

ZFIG120

ZFIG092

ZFIG130

ZFIG180

ZFIG340

ZFIG341

ZFIG149

150 LBS Soldables ▪ Welding fittings low pressure 150 LBS ▪ Raccords à souder basse pression 150 LBS ▪ Raccordi bassa pressione per saldare 150 LBS 235

ZFIG340...HS

ZFIG340...S

ZFIG341...MS

150 LBS Válvulas ▪ 150 LBS fittings Valves ▪ Raccords Vannes150 LBS ▪ Raccordi Valvole 150LBS 236

BP2V3P

BP2V

RACORES INDUSTRIA ALIMENTARIA

Food industry fittings
Raccords alimentaires
Raccordi alimentari

Casquillos para mangueras alimentarias

Food industry hoses ferrules

Jupes à sertir tuyaux alimentaires

Boccola a pressare per tubi alimentari

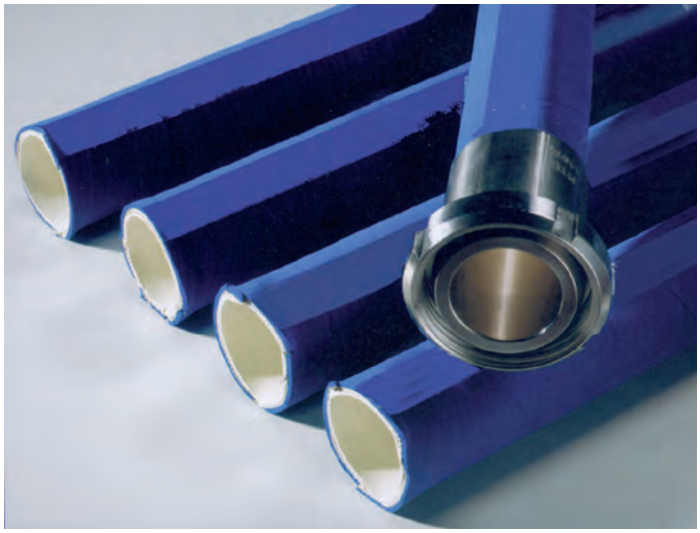

DN	Ø MANGUERA Ø HOSE	Referencia Part n°	€
13-1/2"	23	810421324	16,59
19-3/4"	32	810421933	21,82
25-1"	39	810422540	23,49
32-1"1/4	48	810423248	38,82
38-1"1/2	52	810423852	51,36
38-1"1/2	56	810423857	62,93
40-1"1/2	54	810424055	57,71
40-1"1/2	60	810424061	92,49
50-2"	63	810425064	71,41
50-2"	68	810425069	87,54
50-2"	73	810425073	95,15
65-2"1/2	79	810426580	94,76
65-2"1/2	93	810426593	161,37
70-3"	89	810427090	198,72
75-3"	94	810427595	149,56
75-3"	106	8104275107	195,24
100-4"	122	81042100123	211,33
100-4"	134	81042100135	351,59

MANGUERAS ALIMENTARIAS | FOOD INDUSTRY HOSES

Mangueras aptas para productos alimentarios de aspiración e impulsión:
Leche, vino, aceites, alimentos grasos, bebidas alcohol (máx. 40%), etc.

Professional hoses application in the food industry for suction and discharge:
Milk, wine, oils, fatty foods, alcohol drinks (max 40%), etc.

Consúlta en nuestra ficha técnica datos y marcajes. | Check our technical sheet for data and markings options.
Ver precios en Catálogo Conducciones. | See prices in Connectors Catalogue.

RACORES INDUSTRIA ALIMENTARIA

Food industry fittings
Raccords alimentaires
Raccordi alimentari

Hembras giratorias SMS

Swivel female SMS

Raccord femelle tournante SMS

Femmina girevole SMS

ROSCA THREAD	DN	Referencia Part n°	€
40x1/6"	25	ZRA2004025	39,62
48x1/6"	32	ZRA2004832	60,85
60x1/6"	38	ZRA2006038	77,94
60x1/6"	40	ZRA2006040	81,59
70x1/6"	50	ZRA2007050	110,93
85x1/6"	63	ZRA2008563	188,26
85x1/6"	65	ZRA2008565	173,03
98x1/6"	70	ZRA2009870	275,63
98x1/6"	75	ZRA2009875	259,52
98x1/6"	80	ZRA2009880	303,01
125x1/4"	100	ZRA200125100	406,26
132x1/4"	100	ZRA200132100	452,37

Machos fijos SMS

Fixed male SMS

Raccord mâle SMS

Maschio fisso SMS

ROSCA THREAD	DN	Referencia Part n°	€
40x1/6"	25	ZRA2124025	50,67
48x1/6"	32	ZRA2124832	64,29
60x1/6"	38	ZRA2126038	89,82
60x1/6"	40	ZRA2126040	80,91
70x1/6"	50	ZRA2127050	124,94
85x1/6"	63	ZRA2128563	178,23
85x1/6"	65	ZRA2128565	162,74
98x1/6"	70	ZRA2129870	321,14
98x1/6"	75	ZRA2129875	366,87
98x1/6"	80	ZRA2129880	321,24
125x1/4"	100	ZRA212125100	429,31
132x1/4"	100	ZRA212132100	439,82

Tuercas SMS

Nuts SMS

Écrou SMS

Dadi SMS

ROSCA THREAD	DN	Referencia Part n°	€
40x1/6"	25	ZSMS H 25	12,74
48x1/6"	32	ZSMS H 32	17,48
60x1/6"	38	ZSMS H 38	23,75
70x1/6"	51	ZSMS H 51	28,52
85x1/6"	63	ZSMS H 63	42,41
98x1/6"	76	ZSMS H 76	55,78
125x1/4"	104	ZSMS H 104	68,41
132x1/4"	104	ZSMS H 105	92,70

Conos soldables SMS

Liner to weld SMS

Douilles à souder SMS

Sede a saldare per femmina SMS

DN	Referencia Part n°	€
25	ZSMS S 25	4,54
32	ZSMS S 32	8,24
38	ZSMS S 38	8,65
51	ZSMS S 51	9,91
63	ZSMS S 63	14,32
76	ZSMS S 76	20,51
104	ZSMS S 104	27,32

Machos soldables SMS

Weld male SMS

Nez à souder SMS

Maschio a saldare SMS

ROSCA THREAD	DN	Referencia Part n°	€
40x1/6"	25	ZSMS M 25	8,40
48x1/6"	32	ZSMS M 32	16,27
60x1/6"	38	ZSMS M 38	17,09
70x1/6"	51	ZSMS M 51	20,07
85x1/6"	63	ZSMS M 63	30,07
98x1/6"	76	ZSMS M 76	36,34
125x1/4"	104	ZSMS M 104	53,26

RACORES INDUSTRIA ALIMENTARIA

Food industry fittings
Raccords alimentaires
Raccordi alimentari

Tapones SMS

NEW

Blind round nut SMS

Ecrou Bouchon Avec Chainette

Dado tondo cieco SMS

DN	ROSCA THREAD	Referencia Part n°	€
25	40X1/6"	**Z SMS BN 25**	*
38	60X1/6"	**Z SMS BN 38**	*
51	70X1/6"	**Z SMS BN 51**	*
63	85X1/6"	**Z SMS BN 63**	*
76	98X1/6"	**Z SMS BN 76**	*
104	125X1/4"	**Z SMS BN 104**	*

Juntas SMS PTFE

PTFE Joint for SMS

Joint PTFE pour SMS

Guarnizione in PTFE per SMS

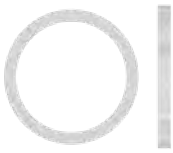

DN	Referencia Part n°	€
25	**JSMSP 25**	**6,40**
32	**JSMSP 32**	**7,74**
38	**JSMSP 38**	**9,86**
51	**JSMSP 51**	**10,91**
63	**JSMSP 63**	**15,28**
76	**JSMSP 76**	**19,65**

Junta SMS silicona

Silicone joint for SMS

Joint silicone pour SMS

Guarnizione in silicone per SMS

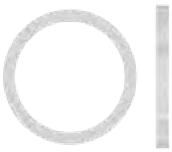

DN	Referencia Part n°	€
25	**JSMSS 25**	**2,58**
32	**JSMSS 32**	**3,19**
38	**JSMSS 38**	**3,64**
51	**JSMSS 51**	**4,00**
63	**JSMSS 63**	**5,33**
76	**JSMSS 76**	**5,90**
104	**JSMSS 104**	**6,84**

***Consultar** / On request/ **Sur demande** / Su richiesta

RACORES INDUSTRIA ALIMENTARIA

Food industry fittings
Raccords alimentaires
Raccordi alimentari

Tri-Clamp ISO 2852

Tri-Clamp ISO 2852

Raccord Tri-Clamp ISO 2852

Tri-Clamp ISO 2852 per tubo flessibile

ø	DN		Referencia Part n°	€
25	12		ZTC2512	24,29
34	12		ZTC3412	37,01
34	19		ZTC3419	37,33
50,5	19		ZTC5019	41,99
50,5	25		ZTC5025	39,43
50,5	32		ZTC5032	46,05
50,5	38		ZTC5038	49,41
50,5	40		ZTC5040	59,97
64	38		ZTC6438	84,11
64	40		ZTC6440	77,97
64	50		ZTC6450	78,27
77,5	50		ZTC7750	127,99
77,5	65	NEW	ZTC7763	161,88
91	65		ZTC9165	198,94
91	75	NEW	ZTC9175	204,92

Tri-Clamp para soldar en tubo

Welding Tri-Clamp for pipe

Raccord Tri-Clamp à souder pour tube

Tri-Clamp a saldare per tubo rigido

ø	DN	Referencia Part n°	€
25	12	ZC25-12	8,08
34	12	ZC34-12	8,71
34	18	ZC34-18	8,71
50.5	18	ZC50-18	9,40
50.5	25	ZC50-25	8,71
50.5	33.7	ZC50-33.7	9,98
50.5	38	ZC50-38	9,57
64	38	ZC64-38	14,72
64	51	ZC64-51	12,50
91	65	ZC91-65	16,34

Juntas para Clamp Silicona

Joint for silicone clamp

Joint pour clamp silicone

Guarnizione per clamp Silicone

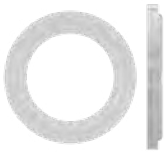

ø	Referencia Part n°	€
25	JCLAMPS 25	5,10
34	JCLAMPS 34	5,10
50	JCLAMPS 50	5,17
64	JCLAMPS 64	7,00
77	JCLAMPS 77	9,65
91	JCLAMPS 91	13,58

Juntas para Clamp PTFE

Joint for PTFE clamp

Joint pour clamp PTFE

Guarnizione per clamp PTFE

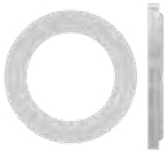

ø	Referencia Part n°	€
25	JCLAMPP 25	*
34	JCLAMPP 34	*
50	JCLAMPP 50	*
64	JCLAMPP 64	*
77	JCLAMPP 77	*
91	JCLAMPP 91	*

Abrazaderas Tri-clamp con 1 pin

Tri-Clamp with 1 pin

Collier Tri-Clamp avec 1 pin

Collare Tri-Clam con 1 pim

ø	Referencia Part n°	€
25	ZAC1P25	14,98
34	ZAC1P34	14,98
50	ZAC1P50	17,73
64	ZAC1P64	21,36
77	ZAC1P77	25,60
91	ZAC1P91	28,46

Tri-Clamp Tapa

Tri-Clamp cover

Tri-Clamp Couvercle

Tri-Clamp copertura

ø	Referencia Part n°	€
25	ZPC25	6,06
34	ZPC34	6,44
50.5	ZPC50	7,64
64	ZPC64	10,10
77.5	ZPC77	13,44
91	ZPC91	16,53

*Consultar / On request / Sur demande / Su richiesta

RACORES INDUSTRIA ALIMENTARIA

Food industry fittings
Raccords alimentaires
Raccordi alimentari

Hembras giratorias DIN 11851

Swivel female DIN 11851

Raccord femelle tournante DIN 11851

Femmina girevole DIN 11851

ROSCA THREAD	DN	Referencia Part n°	€
44x1/6"	20	ZRA1004420	49,14
52x1/6"	25	ZRA1005225	51,48
58x1/6"	32	ZRA1005832	66,70
65x1/6"	38	ZRA1006538	73,89
65x1/6"	40	ZRA1006540	78,05
78x1/6"	50	ZRA1007850	120,42
95x1/6"	63	ZRA1009563	203,36
95x1/6"	65	ZRA1009565	209,12
110x1/4"	75	ZRA10011075	299,19
110x1/4"	80	ZRA10011080	326,57
130x1/4"	100	ZRA100130100	465,63

Machos fijos DIN 11851

Fixed male DIN 11851

Raccord mâle DIN 11851

Maschio fisso DIN 11851

ROSCA THREAD	DN	Referencia Part n°	€
52x1/6"	25	ZRA1125225	79,77
58x1/6"	32	ZRA1125832	87,29
65x1/6"	38	ZRA1126538	130,16
65x1/6"	40	ZRA1126540	132,98
78x1/6"	50	ZRA1127850	154,08
95x1/6"	63	ZRA1129563	247,37
95x1/6"	65	ZRA1129565	243,99
110x1/4"	75	ZRA11211075	360,57
110x1/4"	80	ZRA11211080	345,48
130x1/4"	100	ZRA112130100	577,91

Tuercas DIN 11851

Nuts DIN 11851

Écrous DIN 11851

Dado DIN 11851

ROSCA THREAD	DN	Referencia Part n°	€
34x1/8"	16	ZDIN H 16	10,01
44x1/6"	20	ZDIN H 20	13,49
52x1/6"	25	ZDIN H 25	17,16
58x1/6"	32	ZDIN H 32	19,37
65x1/6"	40	ZDIN H 40	22,78
78x1/6"	50	ZDIN H 50	29,66
95x1/6"	65	ZDIN H 65	46,32
110x1/4"	80	ZDIN H 80	64,75
130x1/4"	100	ZDIN H 100	86,20

Tapones DIN 11851

NEW

DIN 11851 Blind round nut

DIN 11851 Ecrou Bouchon Avec Chainette

DIN 11851 Dado tondo cieco

DN	ROSCA	Referencia Part n°	€
20	44X1/6"	Z DIN BN 20	*
25	52X1/6"	Z DIN BN 25	*
32	58X1/6"	Z DIN BN 32	*
40	65X1/6"	Z DIN BN 40	*
50	78X1/6"	Z DIN BN 50	*
65	95X1/6"	Z DIN BN 65	*
80	110X1/4"	Z DIN BN 80	*

Conos soldables DIN 11851

Liner to weld DIN 11851

Douilles à souder DIN 11851

Ogiva a saldare per dado DIN 11851

DN	Referencia Part n°	€
16	ZDIN S 16	4,05
20	ZDIN S 20	5,74
25	ZDIN S 25	8,08
32	ZDIN S 32	10,08
40	ZDIN S 40	11,74
50	ZDIN S 50	21,18
65	ZDIN S 65	26,17
75/80	ZDIN S 80	35,59
100	ZDIN S 100	56,90

Machos soldables DIN 11851

Weld male DIN 11851

Nez à souder DIN 11851

Maschio a saldare DIN 11851

ROSCA THREAD	DN	Referencia Part n°	€
34x1/8"	16	ZDIN M 16	7,72
44x1/6"	20	ZDIN M 20	11,48
52x1/6"	25	ZDIN M 25	12,24
58x1/6"	32	ZDIN M 32	15,21
65x1/6"	40	ZDIN M 40	19,03
78x1/6"	50	ZDIN M 50	27,95
95x1/6"	65	ZDIN M 65	38,40
110x1/4"	75/80	ZDIN M 80	57,15
130x1/4"	100	ZDIN M 100	75,15

*Consultar / On request/ Sur demande / Su richiesta

RACORES INDUSTRIA ALIMENTARIA

Food industry fittings
Raccords alimentaires
Raccordi alimentari

Juntas DIN 11851 silicona

Silicone joint for DIN 11851

Joint silicone pour DIN 11851

Guarnizione in silicone per DIN 11851

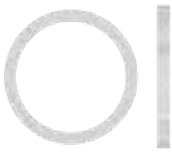

DN	Referencia Part n°	€
20	JDINS 20	1,42
25	JDINS 25	2,22
32	JDINS 32	2,58
40	JDINS 40	2,75
50	JDINS 50	3,56
65	JDINS 65	4,62
80	JDINS 80	5,96
100	JDINS 100	7,61

Juntas DIN 11851 PTFE

PTFE Joint for DIN 11851

Joint PTFE pour DIN 11851

Guarnizione in PTFE per DIN 11851

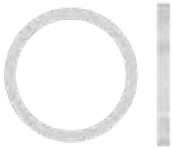

DN	Referencia Part n°	€
20	JDINP 20	9,86
25	JDINP 25	10,58
32	JDINP 32	11,11
40	JDINP 40	12,08
50	JDINP 50	13,61
65	JDINP 65	15,03
80	JDINP 80	16,07
100	JDINP 100	56,02

Hembras giratorias Macon

Swivel female Macon

Raccord femelle tournante Macon

Femmina girevole Macon

ROSCA THREAD	DN	Referencia Part n°	€
M55x3	38	ZRA3005538	*
M55x3	40	ZRA3005540	*
M67x3	50	ZRA3006750	*
M79x3,5	65	ZRA3007965	*
M90x3,5	65	ZRA3009065	*
M90x3,5	70	ZRA3009070	*
M90x3,5	80	ZRA3009080	*
M102x4	80	ZRA30010280	*

Machos fijos Macon

Male fixe Macon

Raccord mâle fixe Macon

Maschio fisso Macon

ROSCA THREAD	DN	Referencia Part n°	€
M55x3	38	ZRA3125538	*
M55x3	40	ZRA3125540	*
M67x3	50	ZRA3126750	*
M79x3,5	65	ZRA3127965	*
M90x3,5	70	ZRA3129070	*
M90x3,5	80	ZRA3129080	*
M102x4	80	ZRA31210280	*

Tuercas Macon

Macon nuts

Écrous à crans Macon

Dadi Macon

ROSCA THREAD	DN	Referencia Part n°	€
M55x3	40	ZMAC H 40	24,67
M67x3	50	ZMAC H 50	33,38
M79x3,5	60	ZMAC H 60	40,89
M90x3,5	70	ZMAC H 70	47,08
M102x4	80	ZMAC H 80	56,48
M125x4	100	ZMAC H 100	66,58

*Consultar / On request / Sur demande / Su richiesta

RACORES INDUSTRIA ALIMENTARIA

Food industry fittings
Raccords alimentaires
Raccordi alimentari

Hembras giratorias prensar SMS para PTFE Serie STD

Swivel female SMS for PTFE STD Series

Femelle tournante SMS pour PTFE Série STD

Femmina girevole SMS per tubo PTFE Serie STD

ROSCA THREAD	DN	Referencia Part n°	€
40x1/6"	1"	ZRA2504016	62,15
48x1/6"	1" 1/4	ZRA2504820	71,74
60x1/6"	1" 1/2	ZRA2506024	109,95
70x1/6"	2"	ZRA2507032	152,91
85x1/6"	2" 1/2	ZRA2508540	224,11

Hembras giratorias DIN 11851 para PTFE Serie STD

Swivel female DIN 11851 for PTFE hose STD Series

Raccord femelle tournante DIN 11851 pour PTFE Série STD

Femmina girevole DIN 11851 per tubo PTFE Serie STD

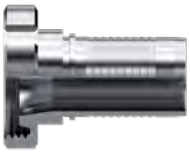

ROSCA THREAD	DN	Referencia Part n°	€
52x1/6"	1"	ZRA1505216	89,72
58x1/6"	1" 1/4	ZRA1505820	125,32
65x1/6"	1" 1/2	ZRA1506524	108,17
78x1/6"	2"	ZRA1507832	159,08
95x1/6"	2" 1/2	ZRA1509540	282,98

Machos SMS para PTFE Serie STD

Fixed male SMS for PTFE hose STD Series

Raccord mâle SMS pour PTFE Série STD

Maschio SMS per tubo PTFE Serie STD

ROSCA THREAD	DN	Referencia Part n°	€
40x1/6"	1"	ZRA2524016	62,88
48x1/6"	1" 1/4	ZRA2524820	70,72
60x1/6"	1" 1/2	ZRA2526024	88,83
70x1/6"	2"	ZRA2527032	164,93
85x1/6"	2" 1/2	ZRA2528540	184,14

Machos DIN 11851 para PTFE Serie STD

Fixed male DIN 11851 for PTFE hose STD Series

Raccord mâle DIN 11851 pour PTFE Série STD

Maschio DIN 11851 per tubo PTFE Serie STD

ROSCA THREAD	DN	Referencia Part n°	€
52x1/6"	1"	ZRA1525216	88,23
78x1/6"	2"	ZRA1527832	197,92
58x1/6"	1" 1/4	ZRA1525820	92,33
65x1/6"	1" 1/2	ZRA1526524	112,97
95x1/6"	2" 1/2	ZRA1529540	306,46

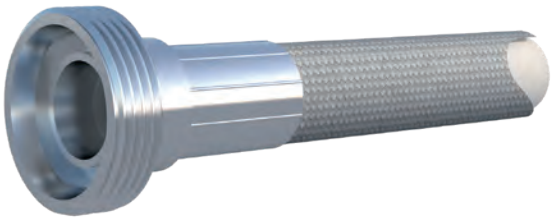

Racores Tri-Clamp Serie STD

Tri-Clamp Fittings STD Series

Raccords Tri-Clamp Série STD

Raccordi Tri-Clamp Serie STD

Ø	DN		Referencia Part n°	€
34	3/8"		ZTCS3406	43,54
50,5	3/4"		ZTCS5012	58,81
50,5	1"		ZTCS5016	59,58
50,5	1" 1/4		ZTCS5020	68,52
50,5	1" 1/2	NEW	ZTCS5024	84,07
64	1" 1/2		ZTCS6424	95,75
64	2"		ZTCS6432	124,43
77,5	2"		ZTCS7732	212,67

Casquillos PTFE liso

Ferrules for smooth PTFE

Jupes PTFE lisse

Boccole pressare per PTFE liscio

DN	Referencia Part n°	€
1/8"	810400100	*
3/16"	810400300	*
1/4"	810400400	*
5/16"	810400500	*
3/8"	810400600	*
1/2"	810400800	*
5/8"	810401000	*
3/4"	810401200	*
1"	810401600	*

***Ver precios en p.24** / **See prices p.24* / *Voir prix p.24 / **Vedere prezzi p.24*

Casquillos PTFE corrugado

Ferrules for convoluted PTFE

Jupes PTFE convoluté

Boccola pressare per PTFE corrugato

DN	Referencia Part n°	€
1/4"	810410400	*
5/16"	810410500	*
3/8"	810410600	*
1/2"	810410800	*
5/8"	810411000	*
3/4"	810411201	*
1"	810411600	*
1"1/4	810412000	*
1"1/2	810412400	*
2"	810413200	*
2"1/2	810414000	*

***Ver precios en p.24** / **See prices p. 24* / *Voir prix p. 24 / **Vedere prezzi p. 24*

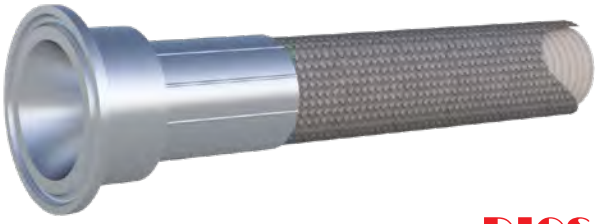

SERIE CAMLOCK DIN 2828

DIN 2828 Camlock Fittings
Raccords Camlock DIN 2828
Camlock DIN 2828

Camlock macho - rosca hembra BSP Tipo A

Male Camlock coupling, female BSP threaded Type A

Adapteur mâle Camlock- filetage femelle BSP Type A

Adattatore Camlock maschio-filettatura femmina BSP Tipo A

DN	ROSCA THREAD	Referencia Part n°	€
12	1/2"	ZA012	6,72
20	1/2"	ZA015	6,72
20	3/4"	ZA020	9,90
25	1"	ZA025	12,54
32	1"1/4	ZA032	17,00
40	1"1/2	ZA040	23,17
50	2"	ZA050	29,64
65	2"1/2	ZA065	43,92
80	3"	ZA080	55,92
100	4"	ZA100	77,72

Camlock hembra - rosca macho BSPT Tipo B

Female Camlock coupling, female BSPT threaded Type B

Adapteur Camlock femelle - filetage mâle BSPT Type B

Adattatore Camlock femmina-filettatura maschio BSPT Tipo B

DN	ROSCA THREAD	Referencia Part n°	€
12	1/2"	ZB012	15,48
20	1/2"	ZB015	15,47
20	3/4"	ZB020	16,25
25	1"	ZB025	21,29
32	1"1/4	ZB032	31,71
40	1"1/2	ZB040	32,13
50	2"	ZB050	45,42
65	2"1/2	ZB065	58,43
80	3"	ZB080	82,05
100	4"	ZB100	116,67

Camlock hembra - para manguera Tipo C

Female Camlock coupling with serrated hose shank Type C

Coupleur Camlock femelle - pour tuyau Type C

Adattatore Camlock con inserto per tubo Tipo C

DN		Referencia Part n°	€
12	1/2"	ZC012	13,70
20	1/2"	ZC015	14,68
20	3/4"	ZC020	16,82
25	1"	ZC025	22,71
32	1"1/4	ZC032	33,14
40	1"1/2	ZC040	36,63
50	2"	ZC050	46,50
65	2"1/2	ZC065	62,12
80	3"	ZC080	101,92
100	4"	ZC100	128,64

Camlock hembra - rosca hembra BSP Tipo D

Female Camlock coupling, female BSP threaded Tipe D

Adapteur Camlock femelle BSP Type D

Adattatore Camlock femmina BSP Tipo D

DN	ROSCA THREAD	Referencia Part n°	€
12	1/2"	ZD012	14,18
20	1/2"	ZD015	15,00
20	3/4"	ZD020	16,48
25	1"	ZD025	22,71
32	1"1/4	ZD032	34,55
40	1"1/2	ZD040	34,03
50	2"	ZD050	47,54
65	2"1/2	ZD065	59,37
80	3"	ZD080	84,42
100	4"	ZD100	121,55

Camlock macho - para manguera Tipo E

Male Camlock coupling, with serrated hose shank Type E

Coupleur Camlock mâle Type E

Adattatore Camlock con inserto per Tipo E

DN		Referencia Part n°	€
12	1/2"	ZE012	6,97
20	1/2"	ZE015	7,05
20	3/4"	ZE020	9,50
25	1"	ZE025	14,23
32	1"1/4	ZE032	21,08
40	1"1/2	ZE040	27,11
50	2"	ZE050	37,20
65	2"1/2	ZE065	53,30
80	3"	ZE080	86,13
100	4"	ZE100	114,17

Camlock macho - rosca macho BSPT Tipo F

Male Camlock coupling, male BSPT threaded Type F

Adapteur Camlock mâle BSPT Type F

Adattatore Camlock maschio BSPT Tipo F

DN	ROSCA THREAD	Referencia Part n°	€
12	1/2"	ZF012	7,97
20	1/2"	ZF015	8,07
20	3/4"	ZF020	9,80
25	1"	ZF025	13,68
32	1"1/4	ZF032	18,49
40	1"1/2	ZF040	28,62
50	2"	ZF050	33,28
65	2"1/2	ZF065	52,31
80	3"	ZF080	66,66
100	4"	ZF100	108,68

SERIE CAMLOCK DIN 2828

DIN 2828 Camlock Fittings
Raccords Camlock DIN 2828
Camlock DIN 2828

Camlock hembra - tapón Tipo DC

Female Camlock Coupling-Dust caps Type DC

Bouchon Camlock femelle Type DC

Tappo di protezione Camlock Tipo DC

DN	Referencia Part n°	€
12	ZDC012	13,22
20	ZDC020	15,76
25	ZDC025	20,43
32	ZDC032	32,28
40	ZDC040	31,19
50	ZDC050	40,36
65	ZDC065	53,18
80	ZDC080	69,09
100	ZDC100	97,94

Camlock macho - tapón tipo DP

Male Camlock coupling-Dust plugs Type DP

Bouchon Camlock mâle Type DP

Cappuccio di protezione Camlock Tipo DP

DN	Referencia Part n°	€
12	ZDP012	6,05
20	ZDP020	7,39
25	ZDP025	9,86
32	ZDP032	14,68
40	ZDP040	16,63
50	ZDP050	23,79
65	ZDP065	40,33
80	ZDP080	48,68
100	ZDP100	77,18

Junta Camlock NBR

Camlock NBR Seal

Joint Camlock NBR

Guarnizione in NBR per Camlock

DN	Referencia Part n°	€
12	JCAMNBR012	0,89
20	JCAMNBR020	0,89
25	JCAMNBR025	1,55
32	JCAMNBR032	1,86
40	JCAMNBR040	2,01
50	JCAMNBR050	3,22
65	JCAMNBR065	4,17
80	JCAMNBR080	3,68
100	JCAMNBR100	6,29

Camlock macho - soldable BW

NEW

Camlock male - weldable BW

Adapteur Camlock mâle à souder BW

Adattatore Camlock maschio BW saldabile

TUBO PIPE	Referencia Part n°	€
21.3	ZABW012	15,47
26.9	ZABW020	16,25
33.7	ZABW025	22,47
42.4	ZABW032	33,47
48.3	ZABW040	33,92
60.3	ZABW050	47,94

Camlock hembra - soldable BW

NEW

Camlock female - weldable BW

Adapteur Camlock femelle à souder BW

Adattatore Camlock femmina BW saldabile

TUBO PIPE	Referencia Part n°	€
21.3	ZDBW012	7,97
26.9	ZDBW020	9,80
33.7	ZDBW025	13,68
42.4	ZDBW032	18,49
48.3	ZDBW040	28,62
60.3	ZDBW050	33,28

Junta Camlock silicona

Camlock silicone seal

Joint Camlock silicone

Guarnizione in silicone per Camlock

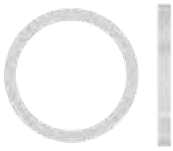

DN	Referencia Part n°	€
12	JCAMS012	2,38
20	JCAMS020	2,38
25	JCAMS025	2,83
32	JCAMS032	4,49
40	JCAMS040	6,03
50	JCAMS050	6,79
65	JCAMS065	7,86
80	JCAMS080	11,74
100	JCAMS100	15,71

SERIE CAMLOCK DIN 2828

DIN 2828 Camlock Fittings
Raccords Camlock DIN 2828
Camlock DIN 2828

Camlock macho - rosca hembra NPT Tipo A

Male Camlock coupling, female NPT threaded Type A
Adapteur Camlock mâle - filetage femelle NPT Type A
Adattatore Camlock maschio-filettatura femmina NPT Tipo A

DN	ROSCA THREAD	Referencia Part n°	€
12	1/2"	ZA012NPT	6,72
20	3/4"	ZA020NPT	10,45
25	1"	ZA025NPT	13,24
32	1" 1/4	ZA032NPT	17,00
40	1" 1/2	ZA040NPT	23,17
50	2"	ZA050NPT	31,28
65	2" 1/2	ZA065NPT	43,92
80	3"	ZA080NPT	55,92
100	4"	ZA100NPT	79,30

Camlock hembra - rosca hembra NPT Tipo D

Female Camlock Coupling, female NPT threaded Type D
Adapteur Camlock femelle NPT Type D
Adattatore Camlock femmina NPT Tipo D

DN	ROSCA THREAD	Referencia Part n°	€
12	1/2"	ZD012NPT	14,18
20	3/4"	ZD020NPT	16,48
25	1"	ZD025NPT	22,71
32	1" 1/4	ZD032NPT	34,55
40	1" 1/2	ZD040NPT	34,03
50	2"	ZD050NPT	47,54
65	2" 1/2	ZD065NPT	59,37
80	3"	ZD080NPT	84,42
100	4"	ZD100NPT	121,55

Camlock hembra - rosca macho NPT Tipo B

Female CamlockCoupling, female NPT threaded Type B
Adapteur Camlock femelle - filetage mâle NPT Type B
Adattatore Camlock femmina-filettatura maschio NPT Tipo B

DN	ROSCA THREAD	Referencia Part n°	€
12	1/2"	ZB012NPT	15,17
20	3/4"	ZB020NPT	15,40
25	1"	ZB025NPT	21,29
32	1" 1/4	ZB032NPT	31,71
40	1" 1/2	ZB040NPT	32,13
50	2"	ZB050NPT	45,42
65	2" 1/2	ZB065NPT	58,43
80	3"	ZB080NPT	82,05
100	4"	ZB100NPT	116,67

Camlock macho - rosca macho NPT Tipo F

Male Camlock coupling, male NPT threaded Type F
Adapteur Camlock mâle NPT Type F
Adattatore Camlock maschio NPT Tipo F

DN	ROSCA THREAD	Referencia Part n°	€
12	1/2"	ZF012NPT	7,97
20	3/4"	ZF020NPT	9,80
25	1"	ZF025NPT	13,68
32	1" 1/4	ZF032NPT	18,49
40	1" 1/2	ZF040NPT	28,62
50	2"	ZF050NPT	33,28
65	2" 1/2	ZF065NPT	52,31
80	3"	ZF080NPT	66,66
100	4"	ZF100NPT	108,68

CAMLOCK NPT

EN 14420-7 | DIN 2828
Ver ficha técnica | Check technical sheet

Para una amplia gama de aplicaciones como agua petróleo y productos químicos
For a wide range of applications such as water, petroleum and chemical liquids

SERIE CAMLOCK DIN 2828

DIN 2828 Camlock Fittings
Raccords Camlock DIN 2828
Camlock DIN 2828

Autolock hembra - rosca macho BSP Tipo B

Autolock, female, BSP male threaded Type B

Autolock femelle - filetage mâle BSP Type B

Autolock femmina-filettatura maschio Tipo B

DN	ROSCA THREAD	Referencia Part n°	€
12	1/2"	**ZB012S**	**29,06**
20	3/4"	**ZB020S**	**24,72**
25	1"	**ZB025S**	**35,40**
32	1"1/4	**ZB032S**	**56,82**
40	1"1/2	**ZB040S**	**66,31**
50	2"	**ZB050S**	**79,60**
65	2"1/2	**ZB065S**	**109,38**
80	3"	**ZB080S**	**151,01**
100	4"	**ZB100S**	**200,01**

Autolock hembra - rosca hembra BSP Tipo D

Autolock, female, BSP female threaded Type D

Autolock femelle - filetage femelle BSP Type D

Autolock femmina - filettatura femmina Tipo D

DN	ROSCA THREAD	Referencia Part n°	€
12	1/2"	**ZD012S**	**26,10**
20	3/4"	**ZD020S**	**26,10**
25	1"	**ZD025S**	**38,32**
32	1"1/4	**ZD032S**	**57,77**
40	1"1/2	**ZD040S**	**68,21**
50	2"	**ZD050S**	**82,80**
65	2"1/2	**ZD065S**	**108,54**
80	3"	**ZD080S**	**148,17**
100	4"	**ZD100S**	**208,19**

Autolock hembra - para manguera Tipo C

Autolock, female, with serrated hose shank Type C

Autolock femelle - pour tuyau Type C

Autolock femmina- per tubo Tipo C

DN	ROSCA THREAD	Referencia Part n°	€
12	1/2"	**ZC012S**	**30,55**
20	3/4"	**ZC020S**	**29,66**
25	1"	**ZC025S**	**41,04**
32	1"1/4	**ZC032S**	**59,55**
40	1"1/2	**ZC040S**	**69,28**
50	2"	**ZC050S**	**87,31**
65	2"1/2	**ZC065S**	**122,07**
80	3"	**ZC080S**	**167,15**
100	4"	**ZC100S**	**235,48**

Autolock hembra - tapón Tipo DC

Autolock, female, DC type dust cap

Autolock femelle - bouchon Type DC

Autolock femmina- Tappo di protezione Tipo DC

DN	Referencia Part n°	€
12	**ZDC012S**	**25,65**
20	**ZDC020S**	**25,65**
25	**ZDC025S**	**33,81**
32	**ZDC032S**	**53,03**
40	**ZDC040S**	**58,84**
50	**ZDC050S**	**74,97**
65	**ZDC065S**	**94,78**
80	**ZDC080S**	**123,97**
100	**ZDC100S**	**166,43**

AUTOLOCK

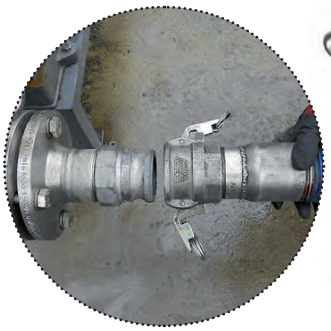

Camlock con cierre de seguridad, múltiples aplicaciones como agua, petróleo y productos químicos

Camlock with security lock, for multiple applications such us water, petroleum and chemical liquids

Ver ficha técnica | Check technical sheet

ACOPLES GUILLEMIN NF E-29572

GUILLEMIN NF E-29572 Fittings
Raccords GUILLEMIN NF E-29572
Raccordi GUILLEMIN NF E-29572

GUILLEMIN con cierre-rosca hembra BSP

GUILLEMIN S.S. with closure-BSP Female thread

GUILLEMIN Inox avec fermeture-Filetage Femelle BSP

GUILLEMIN Inox con chiusura-Filetto femmina BSP

DN	ROSCA THREAD	Referencia Part n°	€
20	3/4"	ZGU01C020	26,93
25	1"	ZGU01C025	37,03
32	1" 1/4	ZGU01C032	43,76
40	1" 1/2	ZGU01C040	70,70
50	2"	ZGU01C050	70,70
65	2" 1/2	ZGU01C065	97,63
80	3"	ZGU01C080	144,76
100	4"	ZGU01C100	245,75

GUILLEMIN sin cierre-rosca hembra BSP

GUILLEMIN S.S. without closure-BSP Female thread

GUILLEMIN Inox sans fermeture-Filetage Femelle BSP

GUILLEMIN Inox senza chiusura- Filetto femmina BSP

DN	ROSCA THREAD	Referencia Part n°	€
20	3/4"	ZGU01S020	16,83
25	1"	ZGU01S025	16,83
32	1" 1/4	ZGU01S032	23,57
40	1" 1/2	ZGU01S040	33,66
50	2"	ZGU01S050	37,03
65	2" 1/2	ZGU01S065	50,50
80	3"	ZGU01S080	84,16
100	4"	ZGU01S100	97,63

GUILLEMIN con cierre-rosca macho BSP

GUILLEMIN S.S. with closure-BSP Male thread

GUILLEMIN Inox avec fermeture-Filetage Mâle BSP

GUILLEMIN Inox con chiusura-Filetto maschio BSP

DN	ROSCA THREAD	Referencia Part n°	€
20	3/4"	ZGU02C020	20,20
25	1"	ZGU02C025	23,57
32	1" 1/4	ZGU02C032	30,30
40	1" 1/2	ZGU02C040	43,76
50	2"	ZGU02C050	73,00
65	2" 1/2	ZGU02C065	97,63
80	3"	ZGU02C080	148,13
100	4"	ZGU02C100	178,42

GUILLEMIN sin cierre-rosca macho BSP

GUILLEMIN S.S. without closure-BSP Male thread

GUILLEMIN Inox sans fermeture-Filetage Mâle BSP

GUILLEMIN Inox senza chiusura-Filetto maschio BSP

DN	ROSCA THREAD	Referencia Part n°	€
20	3/4"	ZGU02S020	16,83
25	1"	ZGU02S025	20,20
32	1" 1/4	ZGU02S032	25,92
40	1" 1/2	ZGU02S040	25,92
50	2"	ZGU02S050	43,76
65	2" 1/2	ZGU02S065	53,86
80	3"	ZGU02S080	105,87
100	4"	ZGU02S100	111,09

GUILLEMIN con cierre-tapón

GUILLEMIN S.S. with closure-Plug

GUILLEMIN Inox avec fermeture-Bouchon

GUILLEMIN Inox con chiusura-Tappo

DN	Referencia Part n°	€
20	ZGU04C020	20,20
25	ZGU04C025	20,20
32	ZGU04C032	30,30
40	ZGU04C040	37,03
50	ZGU04C050	50,50
65	ZGU04C065	67,33
80	ZGU04C080	97,63
100	ZGU04C100	168,32

GUILLEMIN con cierre-reductor

GUILLEMIN S.S. with closure-Reducer

GUILLEMIN Inox avec fermeture-Réduction

GUILLEMIN Inox con chiusura-Riduzione

DN	Referencia Part n°	€
40-32	ZGU03C040032	134,66
50-40	ZGU03C050040	134,66
65-50	ZGU03C065050	171,69
80-65	ZGU03C080065	259,22
100-80	ZGU03C100080	336,65

ACOPLES GUILLEMIN NF E-29572

GUILLEMIN NF E-29572 Fittings
Raccords GUILLEMIN NF E-29572
Raccordi GUILLEMIN NF E-29572

GUILLEMIN con cierre-para manguera

GUILLEMIN S.S. with closure-For hose

GUILLEMIN Inox avec fermeture-Pour tuyau

GUILLEMIN Inox con chiusura- Per tubo

DN	L (mm)	TAMAÑO SIZE	Referencia Part n°	€
40	37	40	**ZGU05C040040**	**37,62**
45	37	40	**ZGU05C040045**	**43,76**
50	48	50	**ZGU05C050050**	**77,43**
50	45,5	50	**ZGU05C050055**	**77,43**
65	50	65	**ZGU05C065065**	**104,36**
80	70	80	**ZGU05C080080**	**178,42**

GUILLEMIN con cierre-soldable

GUILLEMIN S.S. with closure-Welding

GUILLEMIN Inox avec fermeture-À souder

GUILLEMIN Inox con chiusura-Saldabile

DN	Referencia Part n°	€
40	**ZGU06C040040**	**43,76**
50	**ZGU06C050050**	**71,71**
65	**ZGU06C065065**	**97,63**
80	**ZGU06C080080**	**148,13**

GUILLEMIN

EN 14420-8 | NF E-29572
Ver ficha técnica | Check technical sheet

Aplicaciones de presión y aspiración en un amplio rango de industrias
Pressure and suction purposes in a wide range of industries

ACOPLES TW (TANKWAGEN) DIN 28450

TW (Tankwagen) DIN 28450 Fittings
Raccords TW (Tankwagen) DIN 28450
Raccordi TW (Tankwagen) DIN 28450

TW rosca hembra BSP - acople hembra

TW BSP Female thread - female coupling

TW Filetage Femelle BSP - accouplement Femelle

TW Filetto femmina BSP - accoppiamento femmina

DN	Referencia Part n°	€
2"	ZMK05032	74,58
3"	ZMK08048	135,08
4"	ZMK10064	265,24

TW rosca hembra BSP - acople macho

TW BSP Female thread - male coupling

TW Filetage Femelle BSP - accouplement Mâle

TW Filetto femmina BSP - accoppiamento maschio

DN	Ø	Referencia Part n°	€
2"	70.5	ZVK05032	34,44
3"	102	ZVK08048	71,02
4"	128	ZVK10064	99,74

TW tapón - acople hembra

TW cap coupling

TW Bouchon - accouplement Femelle

TW Tappo - accoppiamento femmina

DN	Referencia Part n°	€
2"	ZMB050	31,98
3"	ZMB080	64,20
4"	ZMB100	108,97

TW tapón - acople macho

TW Plug - male coupling

TW Bouchon - accouplement Mâle

TW Tappo - accoppiamento maschio

DN	Ø	Referencia Part n°	€
2"	70.5	ZVB050	29,02
3"	102	ZVB080	51,71
4"	128	ZVB100	82,18

TW acople hembra

TW Female coupling

TW Accouplement Femelle

TW Accoppiamento femmina

DN	Referencia Part n°	€
2"	ZMKS050050	97,08
3"	ZMKS080080	205,72

TW acople macho

TW Male coupling

TW Accouplement Mâle

TW Accoppiamento maschio

DN	Referencia Part n°	€
2"	ZVKS050050	62,28
3"	ZVKS080080	145,95

ACCESORIOS INOX PARA RACOR INDUSTRIAL

Stainless Steel accessories for industrial fitting
Accessoires acier inox pour raccord industriel
Accessori in acciaio inossidabile per raccordo industriale

Campana inox para racor industrial - cierre 45°

Stainless Steel Crimping Ferrule 45° closure

Jupe pour raccord industriel acier inox -fermeture 45°

Boccola in acciaio inossidabile per raccordo industriale-chiusura 45°

DN	Ø INT. Ø INNER	Referencia Part n°	€
25	42.5	ZCA025	6,88
32	47	ZCA032	9,71
40	55	ZCA040	10,08
50	64	ZCA050	15,57
50	68	ZCA05001	31,68
65	79	ZCA065	32,94
80	98	ZCA080	38,74
100	120	ZCA100	74,58

Abrazadera EN 14420-3 inox para racor industrial

Stainless Steel clamp for industrial fitting EN14420-3

Collier pour raccord industriel acier inox EN 14420-3

Collare EN 14420 in acciao inossidabile per raccordo industriale

Ø MANGUERA Ø HOSE	Ø INT. Ø INNER	Referencia Part n°	€
12	21-25	ZAB01021025	19,82
19	29-33	ZAB01029033	24,68
25	35-39	ZAB01035039	28,49
32	42-46	ZAB01042046	29,26
38	47-51	ZAB01047051	32,74
38	49-53	ZAB01049053	32,74
38	52-56	ZAB01052056	31,20
38	58-62	ZAB01058062	29,35
50	60-64	ZAB01060064	47,04
50	63-67	ZAB01063067	54,17
50	68-72	ZAB01068072	57,37
63	74-77	ZAB01074077	62,43
63	77-81	ZAB01077081	78,93
75	87-90	ZAB01087090	95,30
80	89-94	ZAB01089094	93,10
80	94-98	ZAB01094098	85,36
100	114-119	ZAB01114119	223,02

Abrazadera alta presión W4 inox

Stainless steel high pressure clamp W4

Collier haute pression W4 acier inox.

Collare alta pressione W4, inoss.

Ø INT. Ø INNER	Referencia Part n°	€
17-19	ZAB02017019	4,00
20-22	ZAB02020022	4,06
23-25	ZAB02023025	4,13
26-28	ZAB02026028	4,18
29-31	ZAB02029031	5,08
32-35	ZAB02032035	5,20
36-39	ZAB02036039	5,26
40-43	ZAB02040043	5,33
44-47	ZAB02044047	5,83
48-51	ZAB02048051	5,96
52-55	ZAB02052055	6,15
56-59	ZAB02056059	6,28
60-63	ZAB02060063	6,41
64-67	ZAB02064067	6,53
68-73	ZAB02068073	8,44
74-79	ZAB02074079	8,69
80-85	ZAB02080085	8,88
86-91	ZAB02086091	9,13
92-97	ZAB02092097	9,33
98-103	ZAB02098103	9,71
104-112	ZAB02104112	9,89
113-121	ZAB02113121	10,15
122-130	ZAB02122130	11,70
131-139	ZAB02131139	13,82
140-148	ZAB02140148	14,08
149-161	ZAB02149161	14,27
162-174	ZAB02162174	16,50
175-187	ZAB02175187	15,29
188-200	ZAB02188200	15,67

RACORES BAJA PRESIÓN 150 LBS

Screw low pressure fittings 150 LBS
Raccords basse pression 150 LBS
Raccordi bassa pressione 150 LBS

Macho fijo espiga FIG.399

Nipple fixed male fig.399

Mâle fixe nipple fig. 399 inox

Maschio fisso fig. 399 inox

ROSCA THREAD	DN	Referencia Part n°	€
1/4"	10	ZFIG39904	3,14
3/8"	12	ZFIG39906	3,70
1/2"	15	ZFIG39908	4,87
3/4"	20	ZFIG39912	7,70
1"	25	ZFIG39916	11,95
1" 1/4	32	ZFIG39920	17,31
1" 1/2	40	ZFIG39924	22,92
2"	52	ZFIG39932	37,58

Unión macho-macho FIG.150

Union male-male fig.150

Union mâle-mâle fig.150 inox

Unione maschio-maschio fig.150 inox

ROSCA THREAD	Referencia Part n°	€
1/4"	ZFIG15004	2,28
3/8"	ZFIG15006	2,71
1/2"	ZFIG15008	4,07
3/4"	ZFIG15012	5,05
1"	ZFIG15016	6,84
1" 1/4	ZFIG15020	10,96
1" 1/2	ZFIG15024	12,75
2"	ZFIG15032	22,30

Tapón macho hexagonal FIG.290

Hexagon male plug FIG.290

Bouchon mâle 150 LBS tête hexagonale FIG.290

Tappo maschio esagonale FIG.290

ROSCA THREAD	Referencia Part n°	€
1/8"	ZFIG29002	1,85
1/4"	ZFIG29004	2,16
3/8"	ZFIG29006	2,77
1/2"	ZFIG29008	3,02
3/4"	ZFIG29012	4,87
1"	ZFIG29016	6,96
1"1/4	ZFIG29020	9,42
1"1/2	ZFIG29024	12,32
2"	ZFIG29032	19,03
2"1/2	ZFIG29040	29,88
3"	ZFIG29048	48,11
4"	ZFIG29060	72,20

Adaptador hexagonal FIG.280

Hexagon nipple FIG.280

Mamelon hexagonal 150 LBS FIG.280

Niples esagonale FIG.280

ROSCA THREAD	Referencia Part n°	€
1/4"	ZFIG28004	2,16
3/8"	ZFIG28006	2,71
1/2"	ZFIG28008	4,31
3/4"	ZFIG28012	6,22
1"	ZFIG28016	9,61
1"1/4	ZFIG28020	12,01
1"1/2	ZFIG28024	16,76
2"	ZFIG28032	28,89
2"1/2	ZFIG28040	48,29
3"	ZFIG28048	65,11
4"	ZFIG28060	93,32

Reducción macho-macho FIG.245

Reducer male-male fig. 245

Réduction mâle-mâle fig. 245 inox

Riduzione maschio-maschio fig. 245 inox

ROSCA THREAD	THREAD	Referencia Part n°	€
1/4"	1/8"	ZFIG2450402	2,16
3/8"	1/4"	ZFIG2450604	2,65
1/2"	1/4"	ZFIG2450804	3,33
1/2"	3/8"	ZFIG2450806	3,45
3/4"	3/8"	ZFIG2451206	4,80
3/4"	1/2"	ZFIG2451208	5,67
1"	1/2"	ZFIG2451608	8,19
1"	3/4"	ZFIG2451612	7,70
1" 1/4	3/4"	ZFIG2452012	9,86
1" 1/4	1"	ZFIG2452016	11,58
1" 1/2	1"	ZFIG2452416	14,11
1"1/2	1" 1/4	ZFIG2452420	14,11
2"	1" 1/4	ZFIG2453220	19,28
2"	1" 1/2	ZFIG2453224	21,87
2" 1/2	2"	ZFIG2454032	36,28
3"	2" 1/2	ZFIG2454840	57,84

Tuerca plana FIG.312

Flat nut fig.312

Écrou plat fig.312 inox

Dado piano fig.312 inox

ROSCA THREAD	Referencia Part n°	€
1/4"	ZFIG31204	1,85
3/8"	ZFIG31206	2,03
1/2"	ZFIG31208	2,16
3/4"	ZFIG31212	2,90
1"	ZFIG31216	3,63
1" 1/4	ZFIG31220	5,42
1" 1/2	ZFIG31224	7,33
2"	ZFIG31232	10,90

RACORES BAJA PRESIÓN 150 LBS

Screw low pressure fittings 150 LBS
Raccords basse pression 150 LBS
Raccordi bassa pressione 150 LBS

Tapón hembra hexagonal FIG.300

Hexagon female cap. FIG.300

Bouchon femelle hexagonal 150 LBS FIG.300

Tappo femmina esagonale FIG.300

ROSCA THREAD	Referencia Part n°	€
1/8"	ZFIG30002	2,34
1/4"	ZFIG30004	2,71
3/8"	ZFIG30006	2,90
1/2"	ZFIG30008	4,00
3/4"	ZFIG30012	5,73
1"	ZFIG30016	8,19
1"1/4	ZFIG30020	12,07
1"1/2	ZFIG30024	13,43
2"	ZFIG30032	20,02
2"1/2	ZFIG30040	31,11
3"	ZFIG30048	45,34
4"	ZFIG30060	83,16

Adaptador hembra BSP DIN 2986 FIG.270

BSP Female coupling DIN 2986 FIG.270

Manchon femelle gaz DIN 2986 150 LBS FIG.270

Adattatore femmina BSP DIN 2986 FIG.270

ROSCA THREAD	Referencia Part n°	€
1/4"	ZFIG27004	3,14
3/8"	ZFIG27006	3,51
1/2"	ZFIG27008	5,17
3/4"	ZFIG27012	5,05
1"	ZFIG27016	9,73
1"1/4	ZFIG27020	13,18
1"1/2	ZFIG27024	15,28
2"	ZFIG27032	21,38
2"1/2	ZFIG27040	37,08
3"	ZFIG27048	49,83
4"	ZFIG27060	83,28

Tapón macho cuadrado FIG.291

Male square plug FIG.291

Bouchon mâle 150 LBS tête carrée FIG.291

Tappo maschio testa quadrata FIG.291

ROSCA THREAD	Referencia Part n°	€
1/8"	ZFIG29102	1,85
1/4"	ZFIG29104	1,97
3/8"	ZFIG29106	2,28
1/2"	ZFIG29108	2,71
3/4"	ZFIG29112	3,94
1"	ZFIG29116	5,54
1"1/4	ZFIG29120	7,95
1"1/2	ZFIG29124	9,67
2"	ZFIG29132	15,52
2"1/2	ZFIG29140	21,50
3"	ZFIG29148	33,51
4"	ZFIG29160	57,41

Tapón hembra redondo FIG.301

Round female cap. FIG.301

Bouchon femelle ronde 150 LBS FIG.301

Tappo femmina rotondo FIG.301

ROSCA THREAD	Referencia Part n°	€
1/8"	ZFIG30102	2,34
1/4"	ZFIG30104	2,46
3/8"	ZFIG30106	2,46
1/2"	ZFIG30108	3,45
3/4"	ZFIG30112	4,56
1"	ZFIG30116	7,15
1"1/4	ZFIG30120	9,75
1"1/2	ZFIG30124	11,09
2"	ZFIG30132	17,31
2"1/2	ZFIG30140	26,24
3"	ZFIG30148	42,01
4"	ZFIG30160	71,89

Hasta fin de existencias / *Until end of stock* / Jusqu´à la fin du stock / *Fino ad esaurimento*

Reductor macho-hembra FIG.241

Male-female reducer FIG.241

Réduction 150 LBS MG - FG FIG.241

Riduzione maschio-femmina FIG.241

ROSCA THREAD	ROSCA THREAD	Referencia Part n°	€
1/8"	1/4"	ZFIG2410204	2,22
1/4"	3/8"	ZFIG2410406	2,34
1/4"	1/2"	ZFIG2410408	3,45
3/8"	1/2"	ZFIG2410608	3,02
1/2"	3/4"	ZFIG2410812	4,50
3/4"	1"	ZFIG2411216	6,90
1"	1"1/4	ZFIG2411620	10,78
1"	1" 1/2	ZFIG2411624	14,78
1"1/4	1"1/2	ZFIG2412024	11,46
1"1/2	2"	ZFIG2412432	20,39
2"	2"1/2	ZFIG2413240	35,42
2"1/2	3"	ZFIG2414048	50,76
3"	4"	ZFIG2414860	80,70

Tubo roscado FIG.531

Threaded pipe fig. 531

Tube fileté fig. 531 inox

Tubo filettato fig. 531 inox

ROSCA THREAD	Referencia Part n°	€
1/4"	ZFIG53104	3,33
3/8"	ZFIG53106	3,70
1/2"	ZFIG53108	3,22
3/4"	ZFIG53112	3,83
1"	ZFIG53116	5,68
1" 1/4	ZFIG53120	7,53
1" 1/2	ZFIG53124	8,69
2"	ZFIG53132	13,49

RACORES BAJA PRESIÓN 150 LBS

Screw low pressure fittings 150 LBS
Raccords basse pression 150 LBS
Raccordi bassa pressione 150 LBS

Reducción hembra-hembra FIG.240

Female-female Reducer socket FIG.240

Réduction Femelle-femelle 150 LBS FIG.240

Riduzione femmina-femmina FIG.240

ROSCA THREAD	THREAD	Referencia Part n°	€
1/4"	1/8"	ZFIG2400402	2,40
3/8"	1/4"	ZFIG2400604	3,14
1/2"	3/8"	ZFIG2400806	4,37
3/4"	1/2"	ZFIG2401208	6,53
1"	3/4"	ZFIG2401612	8,87
1"1/4	1"	ZFIG2402016	13,31
1"1/2	1"1/4	ZFIG2402420	17,37
2"	1"1/2	ZFIG2403224	19,34
2"1/2	2"	ZFIG2404032	36,96
3"	2"	ZFIG2404832	53,10
3"	2"1/2	ZFIG2404840	56,67
4"	2"	ZFIG2406032	69,44

Codo 90° macho-hembra FIG.092

Male-female elbow 90° FIG.092

Coude 90° 150 LBS MG - FG FIG.092

Adattatore a 90° maschio-femmina FIG.092

ROSCA THREAD	Referencia Part n°	€
1/8"	ZFIG09202	3,02
1/4"	ZFIG09204	3,63
3/8"	ZFIG09206	4,07
1/2"	ZFIG09208	5,79
3/4"	ZFIG09212	8,01
1"	ZFIG09216	12,38
1"1/4	ZFIG09220	16,26
1"1/2	ZFIG09224	22,36
2"	ZFIG09232	33,82
2"1/2	ZFIG09240	64,00
3"	ZFIG09248	107,12
4"	ZFIG09260	195,27

Codo 90° hembra-hembra FIG.090

Female-female elbow 90° FIG.090

Coude 90° 150 LBS femelle gaz FIG.090

Curva 90° femmina-femmina FIG.090

ROSCA THREAD	Referencia Part n°	€
1/8"	ZFIG09002	2,22
1/4"	ZFIG09004	2,71
3/8"	ZFIG09006	3,51
1/2"	ZFIG09008	4,74
3/4"	ZFIG09012	7,39
1"	ZFIG09016	10,60
1"1/4	ZFIG09020	15,71
1"1/2	ZFIG09024	21,50
2"	ZFIG09032	32,77
2"1/2	ZFIG09040	61,29
3"	ZFIG09048	94,06
4"	ZFIG09060	168,29

TE hembra-hembra-hembra FIG.130

Female-female TEE FIG.130

TÉS 150 LBS FG - FG - FG FIG.130

Adattatore a T F - F - F

ROSCA THREAD	Referencia Part n°	€
1/8"	ZFIG13002	2,77
1/4"	ZFIG13004	3,67
3/8"	ZFIG13006	4,62
1/2"	ZFIG13008	6,59
3/4"	ZFIG13012	10,04
1"	ZFIG13016	14,23
1"1/4	ZFIG13020	20,33
1"1/2	ZFIG13024	27,72
2"	ZFIG13032	42,32
2"1/2	ZFIG13040	79,40
3"	ZFIG13048	115,87
4"	ZFIG13060	226,63

Codo 45° hembra-hembra FIG.120

Female-female elbow 45° FIG.120

Coude 45° 150 LBS FG - FG FIG.120

Adattatore a 45° femmina-femmina

ROSCA THREAD	Referencia Part n°	€
1/8"	ZFIG12002	3,02
1/4"	ZFIG12004	3,51
3/8"	ZFIG12006	4,19
1/2"	ZFIG12008	5,54
3/4"	ZFIG12012	8,07
1"	ZFIG12016	10,72
1"1/4	ZFIG12020	17,19
1"1/2	ZFIG12024	22,48
2"	ZFIG12032	32,59
2"1/2	ZFIG12040	55,81
3"	ZFIG12048	83,84
4"	ZFIG12060	146,12

Cruz roscada FIG.180

Threaded cross FIG.180

Croix égale 150 LBS FG FIG.180

Croce filettata femmina FIG.180

ROSCA THREAD	Referencia Part n°	€
1/8"	ZFIG18002	4,07
1/4"	ZFIG18004	5,54
3/8"	ZFIG18006	6,16
1/2"	ZFIG18008	9,73
3/4"	ZFIG18012	15,40
1"	ZFIG18016	20,27
1"1/4	ZFIG18020	35,79
1"1/2	ZFIG18024	37,27
2"	ZFIG18032	55,19
2"1/2	ZFIG18040	109,40
3"	ZFIG18048	157,76
4"	ZFIG18060	284,16

RACORES BAJA PRESIÓN 150 LBS

Screw low pressure fittings 150 LBS
Raccords basse pression 150 LBS
Raccordi bassa pressione 150 LBS

Unión 3 piezas hembra-hembra FIG.340

Female-female FIG.340

Union 3 pièces 150 LBS FG - FG FIG.340

Unione femmina-femmina FIG.340

ROSCA THREAD	Referencia Part n°	€
1/8"	ZFIG34002	7,02
1/4"	ZFIG34004	9,18
3/8"	ZFIG34006	11,33
1/2"	ZFIG34008	12,44
3/4"	ZFIG34012	18,11
1"	ZFIG34016	23,59
1"1/4	ZFIG34020	35,05
1"1/2	ZFIG34024	40,53
2"	ZFIG34032	61,05
2"1/2	ZFIG34040	97,27
3"	ZFIG34048	134,23
4"	ZFIG34060	200,32

Unión 3 piezas macho-hembra FIG.341

Male-female union FIG.341

Union 3 pièces 150 LBS MG - FG FIG.341

Unione maschio-femmina FIG:341

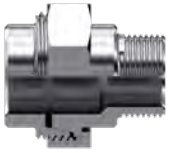

ROSCA THREAD	Referencia Part n°	€
1/4"	ZFIG34104	9,73
3/8"	ZFIG34106	11,83
1/2"	ZFIG34108	13,49
3/4"	ZFIG34112	19,84
1"	ZFIG34116	26,30
1"1/4	ZFIG34120	38,81
1"1/2	ZFIG34124	46,08
2"	ZFIG34132	70,04
2"1/2	ZFIG34140	106,57
3"	ZFIG34148	144,14
4"	ZFIG34160	226,56

Macho soldar FIG.149

Welding male fig.149

Mâle à souder fig.149 inox

Maschio a saldare fig. 149 inox

ROSCA THREAD	Referencia Part n°	€
1/4"	ZFIG14904	1,79
3/8"	ZFIG14906	2,09
1/2"	ZFIG14908	2,65
3/4"	ZFIG14912	3,57
1"	ZFIG14916	4,87
1" 1/4	ZFIG14920	7,27
1" 1/2	ZFIG14924	8,38
2"	ZFIG14932	11,77

Unión 3 piezas hembra-soldar FIG.340HS microfundido

Union 3 fem. welding pieces fig.340hs micro-casting

Union 3 pcs fem. à souder fig.340hs acier moulé

Unione a 3 pezzi f.saldare fig.340hs microfusione

ROSCA THREAD	Referencia Part n°	€
1/4"	ZFIG34004HS	9,24
3/8"	ZFIG34006HS	11,03
1/2"	ZFIG34008HS	13,41
3/4"	ZFIG34012HS	17,80
1"	ZFIG34016HS	24,21
1" 1/4	ZFIG34020HS	35,05
1" 1/2	ZFIG34024HS	40,53
2"	ZFIG34032HS	61,91

Unión 3 piezas soldar FIG.340S microfundido

Union 3 welding pieces fig. 340s micro-casting

Union 3 pièces à souder fig. 340s acier moulé

Unione a 3 pezzi a saldare fig.340s microfusione

DN	Referencia Part n°	€
1/4"	ZFIG34004S	9,06
3/8"	ZFIG34006S	10,78
1/2"	ZFIG34008S	13,49
3/4"	ZFIG34012S	16,63
1"	ZFIG34016S	22,55
1" 1/4	ZFIG34020S	32,09
1" 1/2	ZFIG34024S	36,59
2"	ZFIG34032S	57,16

Unión 3 piezas macho-soldar FIG.341MS microfundido

Union 3 welding male pieces fig.341ms micro-casting

Union 3 pcs mâle à souder fig.341ms acier moulé

Unione a 3 pezzi m.saldare fig.341ms microfusione

ROSCA THREAD	Referencia Part n°	€
1/4"	ZFIG34104MS	9,92
3/8"	ZFIG34106MS	11,09
1/2"	ZFIG34108MS	14,04
3/4"	ZFIG34112MS	20,45
1"	ZFIG34116MS	27,04
1" 1/4	ZFIG34120MS	38,81
1" 1/2	ZFIG34124MS	46,08
2"	ZFIG34132MS	71,15

RACORES BAJA PRESIÓN 150 LBS

Screw low pressure fittings 150 LBS
Raccords basse pression 150 LBS
Raccordi bassa pressione 150 LBS

Válvula esfera paso total baja presión 3 piezas

Ball-valve low pressure full bore 3 pcs

Robinet basse pression 2 voies boisseau sphérique passage total 3 pcs

Rubinetto a sfera bassa pressione 3 pcs

ROSCA THREAD	Referencia Part n°	€
1/4" BSP	**BP2V3P14INOX**	**30,22**
3/8" BSP	**BP2V3P38INOX**	**30,22**
1/2" BSP	**BP2V3P12INOX**	**38,34**
3/4" BSP	**BP2V3P34INOX**	**47,67**
1" BSP	**BP2V3P1INOX**	**65,31**
1" 1/4 BSP	**BP2V3P114INOX**	**108,38**
1" 1/2 BSP	**BP2V3P112INOX**	**138,06**
2" BSP	**BP2V3P2INOX**	**194,11**

Válvula esfera paso total baja presión 64 Bar

Ball-valve low pressure full bore 64 Bar

Robinet basse pression 2 voies boisseau sphérique passage total 64 Bar

Rubinetto a sfera bassa pressione passaggio totale 64 Bar

ROSCA THREAD	DN	Referencia Part n°	€
1/4" BSP	8	**BP2V14INOX**	**19,00**
3/8" BSP	10	**BP2V38INOX**	**19,00**
1/2" BSP	15	**BP2V12INOX**	**21,57**
3/4" BSP	20	**BP2V34INOX**	**29,95**
1" BSP	25	**BP2V1INOX**	**69,64**
1"1/4 BSP	32	**BP2V114INOX**	**63,64**
1"1/2 BSP	40	**BP2V112INOX**	**97,09**
2" BSP	50	**BP2V2INOX**	**151,72**
2"1/2 BSP	65	**BP2V212INOX**	**302,15**
3" BSP	80	**BP2V3INOX**	**440,49**

DICSA

CONDUCCIONES HIDRÁULICAS Y NEUMÁTICAS

www.dicsaes.com

HYDRAULIC & PNEUMATIC CONNECTORS

FLEXIBLES HIDRÁULICOS Δ FLEXIBLE CONNECTORS
FLEXIBLES INDUSTRIALES Δ INDUSTRIAL FLEXIBLE HOSES & FITTINGS
TUBO RÍGIDO Δ PIPE CONNECTORS
ACCESORIOS Δ ACCESSORIES
CONDUCCIONES NEUMÁTICAS Δ PNEUMATIC CONNECTORS

ENCHUFES RÁPIDOS AISI 316 243

Quick couplings AISI 316
Coupleurs rapides AISI 316
Innesti rapidi AISI 316

LLAVES DE PASO AISI 316 246

Ball valves AISI 316
Robinets AISI 316
Rubinetti AISI 316

RACORES GIRATORIOS AISI 316 TRΔLE 249

Quick couplings, ball valves and swivel fittings AISI 316 TrΔle
Coupleurs rapides, robinets et raccords tournants AISI 316 TrΔle
Innesti rapidi, rubinetti e giunti girevole AISI 316 TrΔle

07

ACCESORIOS

Accessories
Accessoires
Accessori

ENCHUFES RÁPIDOS AISI 316

Quick couplings AISI 316
Coupleurs rapides AISI 316
Innesti rapidi AISI 316

Enchufes rápidos ▪ Quick couplings ▪ Quick release couplings ▪ Innesti rapidi | 243

Z8001/Z8002 Z8201/Z8202 Z8008/Z8009 Z8301/Z8302 Z9001/Z9002 Z7111/Z7112 Z9051/Z9052

Enchufes rápidos TrΔle ▪ Quick couplings TrΔle ▪ Coupleurs rapides TrΔle ▪ Innesti rapidi TrΔle | 245

ZB820 ZB800 ZB830 ZB801 ZB811 ZB900

LLAVES DE PASO AISI 316

Ball valves AISI 316
Robinets AISI 316
Rubinetti AISI 316

Llaves de paso ▪ Ball valves ▪ Robinets ▪ Rubinetti | 246

MKH G | MKH_L | MKH_S | MKH G_DN | MKH_L_DN | MKH_S_DN | MK3A-G

Llave 2 vías TrΔle ▪ 2 ways TrΔle ball valve ▪ Robinet 2 voies TrΔle ▪ Rubinetto a sfera TrΔle | 248

ZGB2V | ZGB2V NPT | ZGB2V L | ZGB2V S

Llave 3 vías TrΔle ▪ 3 ways TrΔle ball valve ▪ Robinet 3 voies TrΔle ▪ Rubinetto a sfera TrΔle | 248

ZGB3VH

Manetas ▪ Handles ▪ Leviers ▪ Manopole | 248

Z60013

RACORES GIRATORIOS AISI 316 TRΔLE

Quick couplings, ball valves and swivel fittings AISI 316 TrΔle
Coupleurs rapides, robinets et raccords tournants AISI 316 TrΔle
Innesti rapidi, rubinetti e giunti girevole AISI 316 TrΔle

Z GGL

Z GG90

ENCHUFES RÁPIDOS AISI 316

Quick couplings AISI 316
Coupleurs rapides AISI 316
Innesti rapidi AISI 316

Enchufes de punzón ISO 7241-B

Quick coupling ISO 7241-B

Coupleurs rapides à clapet ISO 7241-B

Innesti a valvola ISO 7241-B

ROSCA THREAD	TAMAÑO ISO ISO SIZE	TAMAÑO BG BG SIZE	E. C.	Referencia Part n°	€
1/4" BSP	6,3	1	M	**Z800104**	**43,69**
3/8" BSP	10	2	M	**Z800106**	**48,53**
1/2" BSP	12,5	3	M	**Z800108**	**58,88**
3/4" BSP	20	4	M	**Z800112**	**97,07**
1" BSP	25	5	M	**Z800116**	**157,76**
1"1/4 BSP	40	7	M	**Z800120**	**515,65**
1"1/2 BSP	40	7	M	**Z800124**	**521,76**
2" BSP	50	8	M	**Z800132**	**1.000,98**
1/4" BSP	6,3	1	H	**Z800204**	**97,07**
3/8" BSP	10	2	H	**Z800206**	**109,23**
1/2" BSP	12,5	3	H	**Z800208**	**143,45**
3/4" BSP	20	4	H	**Z800212**	**212,95**
1" BSP	25	5	H	**Z800216**	**298,46**
1"1/4 BSP	40	7	H	**Z800220**	**752,26**
1"1/2 BSP	40	7	H	**Z800224**	**752,26**
2" BSP	50	8	H	**Z800232**	**1.565,22**

Enchufes de punzón 7241-A

Quick coupling 7241-A

Coupleurs rapides à clapet 7241-A

Innesti a valvola 7241-A

ROSCA THREAD	TAMAÑO ISO ISO SIZE	TAMAÑO BG BG SIZE	E. C.	Referencia Part n°	€
3/8" BSP	10	2	M	**Z820106**	**46,91**
1/2" BSP	12,5	3	M	**Z820108**	**54,65**
3/4" BSP	20	4	M	**Z820112**	**94,65**
1" BSP	25	5	M	**Z820116**	**157,76**
1"1/4 BSP	31,5	6	M	**Z820120**	**376,16**
1"1/2 BSP	40	7	M	**Z820124**	**521,76**
2" BSP	50	8	M	**Z820132**	**1.000,98**
3/8" BSP	10	2	H	**Z820206**	**129,01**
1/2" BSP	12,5	3	H	**Z820208**	**117,55**
3/4" BSP	20	4	H	**Z820212**	**195,56**
1" BSP	25	5	H	**Z820216**	**282,12**
1"1/4 BSP	31,5	6	H	**Z820220**	**746,21**
1"1/2 BSP	40	7	H	**Z820224**	**940,34**
2" BSP	50	8	H	**Z820232**	**1.783,62**

Enchufes autoroscantes ISO 14541

Quick screw couplings ISO 14541

Coupleur rapide à visser filetage ISO 14541

Innesti rapidi a vite ISO 14541

ROSCA THREAD	TAMAÑO ISO ISO SIZE	TAMAÑO BG BG SIZE	E. C.	Referencia Part n°	€
1/4" BSP	6,3	1	M	**Z800804**	**206,29**
3/8" BSP	10	2	M	**Z800806**	**125,63**
1/2" BSP	12,5	3	M	**Z800808**	**151,65**
3/4" BSP	20	4	M	**Z800812**	**250,59**
1" BSP	25	5	M	**Z800816**	**327,63**
1"1/4 BSP	40	7	M	**Z800820**	**1.231,54**
1"1/2 BSP	40	7	M	**Z800824**	**1.231,54**
1/4" BSP	6,3	1	H	**Z800904**	**151,10**
3/8" BSP	10	2	H	**Z800906**	**109,23**
1/2" BSP	12,5	3	H	**Z800908**	**133,49**
3/4" BSP	20	4	H	**Z800912**	**212,35**
1" BSP	25	5	H	**Z800916**	**283,94**
1"1/4 BSP	40	7	H	**Z800920**	**922,13**
1"1/2 BSP	40	7	H	**Z800924**	**922,13**

Enchufes paso total 7241-B

Quick coupling free flow 7241-B

Coupleurs rapides passage total 7241-B

Innesti a passaggio libero 7241-B

ROSCA THREAD	TAMAÑO ISO ISO SIZE	TAMAÑO BG BG SIZE	E. C.	Referencia Part n°	€
1/8" BSP	5	0	M	**Z830102**	**30,02**
1/4" BSP	6,3	1	M	**Z830104**	**30,90**
3/8" BSP	10	2	M	**Z830106**	**33,60**
1/2" BSP	12,5	3	M	**Z830108**	**40,52**
3/4" BSP	20	4	M	**Z830112**	**65,23**
1" BSP	25	5	M	**Z830116**	**99,55**
1"1/4 BSP	40	7	M	**Z830120**	**222,01**
1"1/2 BSP	40	7	M	**Z830124**	**222,01**
2" BSP	50	8	M	**Z830132**	**837,23**
1/8" BSP	5	0	H	**Z830202**	**90,84**
1/4" BSP	6,3	1	H	**Z830204**	**84,48**
3/8" BSP	10	2	H	**Z830206**	**101,91**
1/2" BSP	12,5	3	H	**Z830208**	**117,77**
3/4" BSP	20	4	H	**Z830212**	**166,88**
1" BSP	25	5	H	**Z830216**	**282,11**
1"1/4 BSP	40	7	H	**Z830220**	**433,67**
1"1/2 BSP	40	7	H	**Z830224**	**433,67**
2" BSP	50	8	H	**Z830232**	**1.395,36**

ENCHUFES RÁPIDOS AISI 316

Quick couplings AISI 316
Coupleurs rapides AISI 316
Innesti rapidi AISI 316

Enchufes de válvula plana ISO16028

Flat face quick coupling ISO16028

Coupleurs à clapet face plane ISO16028

Innesti a faccia piana ISO16028

ROSCA THREAD	TAMAÑO ISO ISO SIZE	TAMAÑO BG BG SIZE	E. C.	Referencia Part n°	€
1/4" BSP	6,3	1	M	**Z900104**	**157,83**
3/8" BSP	10	2	M	**Z900106**	**194,81**
1/2" BSP	12,5	3	M	**Z900108**	**223,58**
3/4" BSP	16	4A	M	**Z900112**	**305,93**
1" BSP	19	4	M	**Z900116**	**330,22**
1"1/4 BSP	25	5	M	**Z900120**	**323,94**
1"1/2 BSP	38	7	M	**Z900124**	**650,54**
2" BSP	51	8	M	**Z900132**	**1.452,08**
1/4" BSP	6,3	1	H	**Z900204**	**265,58**
3/8" BSP	10	2	H	**Z900206**	**315,47**
1/2" BSP	12,5	3	H	**Z900208**	**370,33**
3/4" BSP	16	4A	H	**Z900212**	**454,39**
1" BSP	19	4	H	**Z900216**	**545,83**
1"1/4 BSP	25	5	H	**Z900220**	**796,56**
1"1/2 BSP	38	7	H	**Z900224**	**1.577,33**
2" BSP	51	8	H	**Z900232**	**2.497,58**

Enchufes de bola 700 bar acoplamiento en presión

Quick coupling ball type 700 bar connection u/pressure

Coupleurs rapides à bille 700 bar connexion sous pression

Innesti rapido a sfera 700 bar, connesione in pressione

ROSCA THREAD	TAMAÑO ISO ISO SIZE	TAMAÑO BG BG SIZE	E. C.	Referencia Part n°	€
3/8" NPT	10	2	M	**Z711106**	**95,25**
3/8" NPT	10	2	H	**Z711206**	**140,76**

Válvula plana autoroscante acoplamiento en presión

Flat face screw couplings, connection u/pressure

Coupleurs face plane à visser, connexion sous pression

Vite valvola piana, connesione in pressione

ROSCA THREAD		TAMAÑO ISO ISO SIZE	TAMAÑO BG BG SIZE	Referencia Part n°	€
3/8" BSP	M30x2	10	2	**Z905106**	**257,25**
1/2" BSP	M36x2	12,5	3	**Z905108**	**316,68**
3/4" BSP	M36x2	16	4A	**Z905112**	**314,26**
1" BSP	M43x3	19	4	**Z905116**	**467,12**
1"1/4 BSP	M48x3	25	5	**Z905120**	**715,89**
1"1/2 BSP	M80x4	40	7	**Z905124**	**1.334,66**
3/8" BSP	M30X2	10	2	**Z905206**	**218,40**
1/2" BSP	M36X2	12,5	3	**Z905208**	**310,62**
3/4" BSP	M36X2	16	4A	**Z905212**	**286,36**
1" BSP	M43X3	19	4	**Z905216**	**424,69**
1"1/4 BSP	M48X3	25	5	**Z905220**	**612,72**
1"1/2 BSP	M80X4	40	7	**Z905224**	**2.014,13**

ENCHUFES RÁPIDOS AISI 316 TRΔLE®

Quick couplings AISI 316 TrΔle®
Coupleurs rapides AISI 316 TrΔle®
Innesti rapidi AISI 316 TrΔle®

Enchufes TrΔle 7241-A

Quick couplings 7241-A TrΔle

Coupleurs 7241-A TrΔle

Innesti rapidi 7241-A TrΔle

ROSCA THREAD	TAMAÑO ISO ISO SIZE	TAMAÑO BG BG SIZE	E. C.	Referencia Part n°	€
1/4" BSP	6,3	1	M	**ZB820104**	**16,59**
3/8" BSP	10	2	M	**ZB820106**	**25,44**
1/2" BSP	12,5	3	M	**ZB820108**	**42,85**
3/4" BSP	20	4	M	**ZB820112**	**77,89**
1" BSP	25	5	M	**ZB820116**	**108,19**
1/4" BSP	6,3	1	H	**ZB820204**	**40,30**
3/8" BSP	10	2	H	**ZB820206**	**60,89**
1/2" BSP	12,5	3	H	**ZB820208**	**101,77**
3/4" BSP	20	4	H	**ZB820212**	**182,32**
1" BSP	25	5	H	**ZB820216**	**254,37**

Enchufes TrΔle 7241-B

Quick couplings 7241-B TrΔle

Coupleurs TrΔle 7241-B

Innesti rapidi 7241-B TrΔle

ROSCA THREAD	TAMAÑO ISO ISO SIZE	TAMAÑO BG BG SIZE	E. C.		Referencia Part n°	€
1/8" BSP	5	0	M	NEW	**ZB800102**	**12,36**
1/4" BSP	6,3	1	M		**ZB800104**	**16,46**
3/8" BSP	10	2	M		**ZB800106**	**26,06**
1/2" BSP	12,5	3	M		**ZB800108**	**43,88**
3/4" BSP	20	4	M		**ZB800112**	**79,81**
1" BSP	25	5	M		**ZB800116**	**110,80**
1/8" BSP	5	0	H	NEW	**ZB800202**	**27,65**
1/4" BSP	6,3	1	H		**ZB800204**	**39,88**
3/8" BSP	10	2	H		**ZB800206**	**62,37**
1/2" BSP	12,5	3	H		**ZB800208**	**104,22**
3/4" BSP	20	4	H		**ZB800212**	**186,77**
1" BSP	25	5	H		**ZB800216**	**260,55**

Enchufes Paso Total TrΔle 7241-B

Quick couplings free flow TrΔle 7241-B

Coupleurs passage total TrΔle 7241-B

Innesti a passaggio libero TrΔle 7241-B

ROSCA THREAD	TAMAÑO ISO ISO SIZE	TAMAÑO BG BG SIZE	E. C.	Referencia Part n°	€
1/4" BSP	6,3	1	M	**ZB830104**	**25,09**
3/8" BSP	10	2	M	**ZB830106**	**31,73**
1/2" BSP	12,5	3	M	**ZB830108**	**38,49**
3/4" BSP	20	4	M	**ZB830112**	**61,68**
1" BSP	25	5	M	**ZB830116**	**99,32**
1/4" BSP	6,3	1	H	**ZB830204**	**68,43**
3/8" BSP	10	2	H	**ZB830206**	**80,87**
1/2" BSP	12,5	3	H	**ZB830208**	**96,42**
3/4" BSP	20	4	H	**ZB830212**	**134,87**
1" BSP	25	5	H	**ZB830216**	**284,90**

Enchufes NPT TrΔle 7241-A

Quick couplings 7241-A NPT TrΔle

Coupleurs 7241-A NPT TrΔle

Innesti rapidi 7241-A NPT TrΔle

ROSCA THREAD	TAMAÑO ISO ISO SIZE	TAMAÑO BG BG SIZE	E. C.	Referencia Part n°	€
1/4" NPT	6,3	1	M	**ZB801104**	**16,32**
3/8" NPT	10	2	M	**ZB801106**	**25,92**
1/2" NPT	12,5	3	M	**ZB801108**	**43,66**
3/4" NPT	20	4	M	**ZB801112**	**79,36**
1" NPT	25	5	M	**ZB801116**	**110,23**
1/4" NPT	6,3	1	H	**ZB801204**	**39,65**
3/8" NPT	10	2	H	**ZB801206**	**62,04**
1/2" NPT	12,5	3	H	**ZB801208**	**103,69**
3/4" NPT	20	4	H	**ZB801212**	**185,76**
1" NPT	25	5	H	**ZB801216**	**259,17**

Enchufes NPT TrΔle 7241-B

NEW

Quick couplings 7241-B NPT TrΔle

Coupleurs 7241-B NPT TrΔle

Innesti rapidi 7241-B NPT TrΔle

ROSCA THREAD	TAMAÑO ISO ISO SIZE	TAMAÑO BG BG SIZE	E. C.	Referencia Part n°	€
1/4" NPT	6,3	1	M	**ZB811104**	**15,73**
3/8" NPT	10	2	M	**ZB811106**	**24,86**
1/2" NPT	12,5	3	M	**ZB811108**	**41,84**
3/4" NPT	20	4	M	**ZB811112**	**75,89**
1" NPT	25	5	M	**ZB811116**	**105,35**
1/4" NPT	6,3	1	H	**ZB811204**	**37,94**
3/8" NPT	10	2	H	**ZB811206**	**59,31**
1/2" NPT	12,5	3	H	**ZB811208**	**99,10**
3/4" NPT	20	4	H	**ZB811212**	**177,49**
1" NPT	25	5	H	**ZB811216**	**247,64**

Enchufes de válvula plana ISO16028 TrΔle

NEW

Flat face quick coupling ISO16028 TrΔle

Coupleurs à clapet face plane ISO16028 TrΔle

Innesti a faccia piana ISO16028 TrΔle

ROSCA THREAD	TAMAÑO ISO ISO SIZE	TAMAÑO BG BG SIZE	E. C.	Referencia Part n°	€
1/4" BSP	6	1	M	**ZB900104**	**65,90**
3/8" BSP	10	2	M	**ZB900106**	**87,57**
1/2" BSP	12	3	M	**ZB900108**	**120,82**
3/4" BSP	16	4A	M	**ZB900112**	**141,29**
1" BSP	19	4	M	**ZB900116**	**209,69**
1/4" BSP	6	1	H	**ZB900204**	**152,88**
3/8" BSP	10	2	H	**ZB900206**	**204,25**
1/2" BSP	12	3	H	**ZB900208**	**227,17**
3/4" BSP	16	4A	H	**ZB900212**	**250,13**
1" BSP	19	4	H	**ZB900216**	**459,33**

LLAVES DE PASO AISI 316

Ball valves AISI 316
Robinets AISI 316
Rubinetti AISI 316

Llave 2 vías rosca hembra BSP

2 Way ball-valves BSP female ISO 228

Robinet haute pression 2 voies boisseau sphérique femelle BSP

Rubinetto a sfera femmina - femmina BSP

DN	ROSCA THREAD	Referencia Part n°	€
4	1/8" BSP	**MKH G 1/8**	**228,60**
6	1/4" BSP	**MKH G 1/4**	**151,78**
10	3/8" BSP	**MKH G 3/8**	**190,01**
13	1/2"BSP	**MKH G 1/2**	**195,60**
16	5/8" BSP	**MKH G 5/8**	**460,88**
20	3/4" BSP	**MKH G 3/4**	**467,46**
25	1" BSP	**MKH G 1**	**516,31**
25	1" 1/4 BSP	**MKH G 1 1/4 DN25**	**650,95**
25	1"1/2 BSP	**MKH G 1 1/2 DN25**	**739,26**

Llave 2 vías tubo rígido serie ligera

2 Way ball-valves: tube connection serie L DIN 2353

Robinet haute pression 2 voies boisseau sphérique pour tube rigide série légère

Rubinetto a sfera maschio DIN 2353 - L -

DN	TUBO PIPE	ROSCA THREAD	Referencia Part n°	€
4	6 L	M12X1,5	**MKH 6 L**	**303,94**
6	8 L	M14X1,5	**MKH 8 L**	**268,60**
8	10 L	M16X1.5	**MKH 10 L**	**268,60**
10	12 L	M18X1.5	**MKH 12 L**	**246,73**
13	15 L	M22X1.5	**MKH 15 L**	**287,71**
16	18 L	M26X1.5	**MKH 18 L**	**341,67**
20	22 L	M30X2	**MKH 22 L**	**501,13**
25	28 L	M36X2	**MKH 28 L**	**638,35**
25/32	35 L	M45X2	**MKH 35 L**	**669,57**
25/40	42 L	M52X2	**MKH 42 L**	**899,52**

Llave 2 vías tubo rígido serie pesada

2 Way ball-valves: tube connection serie S DIN 2353

Robinet haute pression 2 voies boisseau sphérique pour tube rigide série lourde

Rubinetto a sfera maschio DIN 2353 - S -

DN	TUBO PIPE	ROSCA THREAD	Referencia Part n°	€
4	8 S	M16X1.5	**MKH 8 S**	**268,60**
6	10 S	M18X1.5	**MKH 10 S**	**280,34**
8	12 S	M20X1.5	**MKH 12 S**	**236,28**
10	14 S	M22X1.5	**MKH 14 S**	**310,70**
13	16 S	M24X1.5	**MKH 16 S**	**254,10**
13	20 S	M30X2	**MKH 20 S DN13**	**372,33**
16	20 S	M30X2	**MKH 20 S**	**431,08**
25	30 S	M42X2	**MKH 30 S**	**537,82**
20	25 S	M36X2	**MKH 25 S**	**466,35**
25/32	38 S	M52X2	**MKH 38 S**	**613,16**

Llave 2 vías rosca hembra BSP paso total

Ball-valves BSP female

Robinet haute pression 2 voies boisseau sphérique femelle

Rubinetto a sfera femmina - femmina BSP

DN	ROSCA THREAD	Referencia Part n°	€
32	1" 1/4 BSP	**MKH G 1 1/4 DN32**	**1.109,37**
50	2" BSP	**MKH G 2 DN50**	**1.951,38**

Llave 2 vías tubo rígido L paso total

Ball-valves: tube connection serie L DIN 2353 full bore

Robinet haute pression 2 voies boisseau sphérique Métrique série légère passage total

Rubinetto a sfera maschio DIN 2353 - L -

DN	TUBO PIPE	ROSCA THREAD	Referencia Part n°	€
35	35 L	M45X2	**MKH 35 L DN35**	**1.286,23**

Llave 2 vías tubo rígido S paso total

Ball-valves: tube connection serie S DIN 2353 full bore

Robinet haute pression 2 voies boisseau sphérique Métrique série légère passage total

Rubinetto a sfera maschio DIN 2353 - S -

DN	TUBO PIPE	ROSCA THREAD	Referencia Part n°	€
32	38 S	M52x2	**MKH 38 S DN32**	**1.253,48**

Llave 3 vías hembra - hembra - hembra BSP paso en L

3 Way ball-valve female BSP L flow

Robinet haute pression 3 voies boisseau sphérique femelle BSP passage en L

Rubinetto a sfera 3 vie femmina BSP passaggio in L

DN	ROSCA THREAD	Referencia Part n°	€
4	1/8"BSP	**MK3A-G 1/8**	**495,11**
6	1/4"BSP	**MK3A-G 1/4**	**389,72**
10	3/8"BSP	**MK3A-G 3/8**	**548,88**
13	1/2"BSP	**MK3A-G 1/2**	**480,30**
20	3/4"BSP	**MK3A-G 3/4**	**978,73**
25	1"BSP	**MK3A-G 1**	**1.374,84**
25	1"1/4 BSP	**MK3A-G 1 1/4**	**1.431,07**
40	1"1/2 BSP	**MK3A-G 1 1/2**	**1.528,35**

LLAVES DE PASO AISI 316

Ball valves AISI 316
Robinets AISI 316
Rubinetti AISI 316

Manetas 1
Handles for ball-valves
Leviers pour robinets
Maniglia

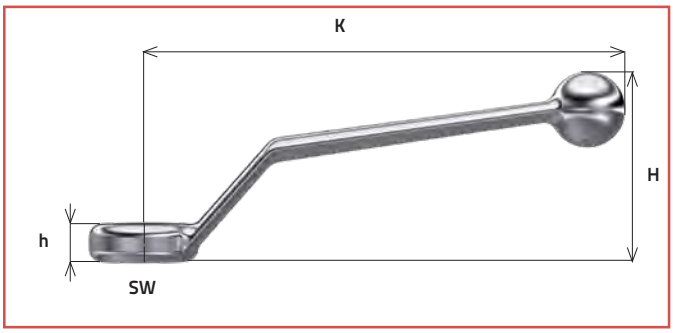

Manetas 2
Handles for ball-valves
Leviers pour robinets
Maniglia

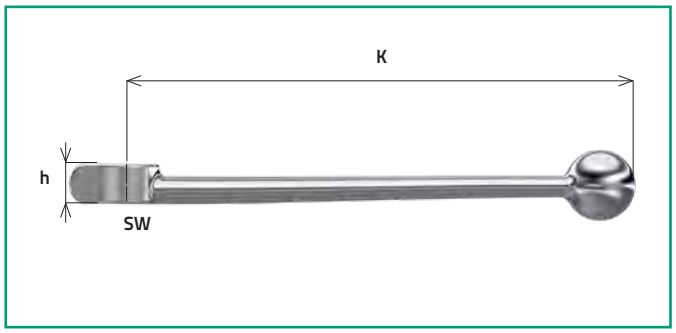

	SW	Zinc Zinc						Aluminio Aluminum			INOX/SS316L			Acero Steel		
Serie BSP 1/8 - 1/4 - 3/8 - 1/2 - 5/8	9	A60013155330* (1)			AR603722*						Z60013155330 *			C600063*		
Serie DIN 6 - 8 - 10 - 12 - 14 - 15 - 16		H	J	K	H	J	K				H	J	K	H	J	K
		45	8.7	155	-	10	155				45	8.7	155	47	9	155
Serie BSP 5/8	12							L501741* (1)								
Serie DIN 18								H	J	K						
								55	12	160						
Serie BSP 3/4 - 1 - 1 1/4	14	A60013155331* (1)						LR606745 *			Z60013155331*			C708618*		
Serie DIN 22 - 25 - 28 - 30 - 35 - 38		H	J	K				H	J	K	H	J	K	H	J	K
		-	13	200				-	12	200	-	13	200	64	12	171
Serie BSP 1 1/4 - 1 1/2 - 2	17							LR801799* (1)			Z60013155332*					
Serie DIN 3 3-5 - 38 - 42								H	J	K	H	J	K			
								-	16	320	-	15	90			

Las llaves se suministran con maneta de zinc o aluminio
Handles for ball-valves are supplied with zinc or aluminum
Leviers pour robinets sont fournies avec une poignée en zinc ou en aluminium
Maniglia sono fornite con manico in zinco o alluminio

(1) **Maneta sumistrada junto a la llave** / Handles are supplied for ball-valves / Leviers sont fournies pour robinets / Maniglia sono fornite con manico

LLAVES DE PASO AISI 316

Ball valves AISI 316
Robinets AISI 316
Rubinetti AISI 316

Llave 2 vías rosca hembra BSP TrΔle

2 ways ball valve female BSP TrΔle

Robinet haute pression 2 voies boisseau sphérique femelle BSP TrΔle

Rubinetto a sfera femmina BSP TrΔle

DN	ROSCA THREAD	Referencia Part n°	€
4	1/8" BSP	**ZGB2V 1/8**	**74,73**
6	1/4" BSP	**ZGB2V 1/4**	**115,83**
10	3/8" BSP	**ZGB2V 3/8**	**141,31**
13	1/2"BSP	**ZGB2V 1/2**	**156,87**
20	3/4" BSP	**ZGB2V 3/4**	**240,08**
25	1" BSP	**ZGB2V 1**	**332,16**

Llave 2 vías rosca hembra NPT TrΔle

2 ways ball valve female NPT TrΔle

Robinet haute pression 2 voies boisseau sphérique femelle NPT TrΔle

Rubinetto a sfera femmina NPT TrΔle

DN	ROSCA THREAD		Referencia Part n°	€
6	1/4" NPT		**ZGB2V 1/4 NPT**	**115,83**
10	3/8" NPT		**ZGB2V 3/8 NPT**	**141,31**
12	1/2" NPT		**ZGB2V 1/2 NPT**	**156,87**
19	3/4" NPT		**ZGB2V 3/4 NPT**	**240,08**
25	1" NPT	NEW	**ZGB2V 1 NPT**	**379,72**

Llave 2 vías tubo rígido serie ligera TrΔle

2 ways ball valve: tube connector light serie TrΔle

Robinet haute pression 2 voies boisseau sphérique sortie pour tube rigide Série légère TrΔle

Rubinetto a sfera DIN 2353 - L TrΔle

DN	TUBO PIPE	ROSCA THREAD	Referencia Part n°	€
6	8 L	M14X1,5	**ZGB2V 8 L**	**125,02**
8	10 L	M16X1.5	**ZGB2V 10 L**	**139,41**
10	12 L	M18X1.5	**ZGB2V 12 L**	**144,04**
13	15 L	M22X1.5	**ZGB2V 15 L**	**168,70**
16	18 L	M26X1.5	**ZGB2V 18 L**	**168,70**
20	22 L	M30X2	**ZGB2V 22 L**	**307,87**
25	28L	M36X2	**ZGB2V 28 L**	**351,11**

Llave 2 vías tubo rígido serie pesada TrΔle

2 ways ball valve: tube connector heavy serie TrΔle

Robinet haute pression 2 voies boisseau sphérique sortie pour tube rigide Série lourde TrΔle

Rubinetto a sfera DIN 2353 - S TrΔle

DN	TUBO PIPE	ROSCA THREAD	Referencia Part n°	€
4	8 S	M16X1.5	**ZGB2V 8 S**	**124,53**
6	10 S	M18X1.5	**ZGB2V 10 S**	**124,53**
8	12 S	M20X1.5	**ZGB2V 12 S**	**139,41**
10	14 S	M22X1.5	**ZGB2V 14 S**	**144,34**
13	16 S	M24X1.5	**ZGB2V 16 S**	**168,70**
16	20 S	M30X2	**ZGB2V 20 S**	**196,83**
20	25 S	M36X2	**ZGB2V 25 S**	**307,87**

Llave 3 vías TrΔle hembra - hembra - hembra BSP paso en L

NEW

3 Way ball-valve female ISO 228

Robinet haute pression 3 voies boisseau sphérique femelle

Rubinetto a sfera 3 vie femmina BSP

DN	R1	Referencia Part n°	€
6	1/4" BSP	**ZGB3VH 1/4**	**104,70**
10	3/8" BSP	**ZGB3VH 3/8**	**157,05**
13	1/2" BSP	**ZGB3VH 1/2**	**197,76**
20	3/4" BSP	**ZGB3VH 3/4**	**339,21**
25	1" BSP	**ZGB3VH 1**	**511,87**

Manetas para llaves de paso

Handles for ball-valves

Leviers pour robinets

Manopole per rubinetti a sfera

TAMAÑO SIZE	Referencia Part n°	€
HEX9	**Z60013155330**	**22,12**
HEX14	**Z60013155331**	**37,12**
HEX17	**Z60013155332**	**254,04**

Ver tabla de dimensiones en pág 247 / *See dimension table in page 247* / Voir table de dimensions à la page 247 / *Vedere tabella di dimensioni a pagina 247*

RACORES GIRATORIOS AISI 316 TRΔLE

Quick couplings, ball valves and swivel fittings AISI 316 TrΔle
Coupleurs rapides, robinets et raccords tournants AISI 316 TrΔle
Innesti rapidi, rubinetti e giunti girevole AISI 316 TrΔle

Racores giratorios rectos TrΔle

Straight swivel fittings TrΔle

Raccord tournant droit TrΔle

Giunti girevoli diritti TrΔle

ROSCA THREAD	Referencia Part n°	€
1/4" BSP	**Z GGL 1/4**	**219,80**
3/8" BSP	**Z GGL 3/8**	**252,27**
1/2 " BSP	**Z GGL 1/2**	**283,04**
3/4" BSP	**Z GGL 3/4**	**361,62**
1" BSP	**Z GGL 1**	**484,06**
1" 1/4 BSP	**Z GGL 1 1/4**	**650,35**
1" 1/2 BSP	**Z GGL 1 1/2**	**931,16**
2" BSP	**Z GGL 2**	**1.248,48**

Racores giratorios 90° TrΔle

Elbow 90° swivel female TrΔle

Raccord tournant coude 90° TrΔle

Giunti girevoli 90° TrΔle

ROSCA THREAD	Referencia Part n°	€
1/4" BSP	**Z GG90 1/4**	**277,35**
3/8 " BSP	**Z GG90 3/8**	**333,20**
1/2" BSP	**Z GG90 1/2**	**373,50**
3/4 " BSP	**Z GG90 3/4**	**501,14**
1" BSP	**Z GG90 1**	**616,44**
1" 1/4 BSP	**Z GG90 1 1/4**	**961,33**
1" 1/2 BSP	**Z GG90 1 1/2**	**1.329,63**
2 " BSP	**Z GG90 2**	**1.909,13**

RACORES GIRATORIOS | STRAIGHT SWIVEL FITTINGS

Racores giratorios para compensar la rotación y torsión de la manguera y prevenir sus posibles daños.

Straight swivel fittings can compensate the hose rotation and torsion to prevent possible damage.

Ver ficha técnica | Check technical sheet

COMPONENTES HIDRÁULICOS AISI 316

253

Hydraulic Components AISI 316
Composants Hydrauliques AISI 316
Componenti Idraulici AISI 316

08

ELEMENTOS DE CONTROL

Control components
Éléments de contrôle
Elementi di controllo

COMPONENTES HIDRÁULICOS AISI 316

Hydraulic Components AISI 316
Composants Hydrauliques AISI 316
Componenti Idraulici AISI 316

Reguladores caudal ▪ Flow control valves ▪ Régulateurs de débit ▪ Regolatori di flusso | 253

ZFT2251B

ZFT2253U

ZFT22512B

ZFT22572B

ZFT22575U

Anti-retornos ▪ Check-valves ▪ Clapet antiretour ▪ Valvole di ritegno | 254

Z FPR

Anti-retornos TrΔle® ▪ Check-valves TrΔle® ▪ Clapet antiretour TrΔle® ▪ Valvole di ritegno TrΔle® | 254

ZVT0

Limitadoras ▪ Relief valves ▪ Limiteurs de pression ▪ Valvole de regolazione | 254

ZLIM

COMPONENTES HIDRÁULICOS AISI 316

Hydraulic Components AISI 316
Composants Hydrauliques AISI 316
Componenti Idraulici AISI 316

Regulador caudal forjado bidireccional 350 Bar

Forged bidirectional flow control valve 350 Bar

Régulateur débit bidirectionnel forgé 350 Bar

Valvola di regolazione bidirezionale battuto 350 Bar

ROSCA THREAD		CAUDAL MÁX. MAX. FLOW (l/min)	Referencia Part n°	€
1/4" BSP	M17x1	12	**ZFT2251B04**	**174,40**
3/8" BSP	M20x1	30	**ZFT2251B06**	**215,37**
1/2" BSP	M25x1,5	45	**ZFT2251B08**	**336,19**
3/4" BSP	M30x1,5	85	**ZFT2251B12**	**452,81**

Regulador caudal forjado unidireccional 350 Bar

Forged unidirectional flow control valve 350 Bar

Régulateur débit unidirectionnel forgé 350 Bar

Valvola di regolazione unidirezionale battuto

ROSCA THREAD		CAUDAL MÁX. MAX. FLOW (l/min)	Referencia Part n°	€
1/4" BSP	M17x1	12	**ZFT2253U04**	**209,28**
3/8" BSP	M20x1	30	**ZFT2253U06**	**254,77**
1/2" BSP	M25x1,5	45	**ZFT2253U08**	**362,46**
3/4" BSP	M30x1,5	85	**ZFT2253U12**	**486,64**

Regulador caudal forjado bidireccional macho/hembra 350 Bar

Forged unidirectional flow control valve male/female 350 Bar

Régulateur débit bidirectionnel forgé mâle/femelle 350 Bar

Valvola di regolazione unidirezionale battuto maschio/femmina 350 Bar

ROSCA THREAD		CAUDAL MÁX. MAX. FLOW (l/min)	Referencia Part n°	€
1/8" BSP	M15x1	10	**ZFT22512B02**	**203,19**
1/4" BSP	M17x1	13	**ZFT22512B04**	**189,00**
3/8" BSP	M20x1	30	**ZFT22512B06**	**233,34**
1/2" BSP	M25x1,5	60	**ZFT22512B08**	**345,86**
3/4" BSP	M30x1,5	80	**ZFT22512B12**	**465,94**

Regulador caudal bidireccional 400 Bar

Bidirectional flow control valve 400 Bar

Régulateur débit bidirectionnel 400 Bar

Valvola di regolazione bidirezionale 400 Bar

ROSCA THREAD		CAUDAL MÁX. MAX. FLOW (l/min)	Referencia Part n°	€
1/4" BSP	M20x1	13	**ZFT22572B04**	**256,35**
3/8" BSP	M25x1,5	38	**ZFT22572B06**	**334,51**
1/2" BSP	M30x1,5	50	**ZFT22572B08**	**487,90**
3/4" BSP	M40x1,5	80	**ZFT22572B12**	**755,17**
1" BSP	M50x1,5	190	**ZFT22572B16**	**1.520,01**
1"1/4 BSP	M50x1,5	195	**ZFT22572B20**	**1.661,00**
1" 1/2 BSP	M55x2	200	**ZFT22572B24**	**2.626,71**
2" BSP	M65x2	200	**ZFT22572B32**	**3.428,11**

Regulador caudal unidireccional 400 Bar

Unidirectional flow control valve 400 Bar

Régulateur débit unidirectionnel 400 Bar

Valvola di regolazione unidirezionale 400 Bar

ROSCA THREAD		CAUDAL MÁX. MAX. FLOW (l/min)	Referencia Part n°	€
1/8" BSP	M17x1	6	**ZFT22575U02**	**449,87**
1/4" BSP	M20x1	14	**ZFT22575U04**	**378,32**
3/8" BSP	M25x1,5	20	**ZFT22575U06**	**473,93**
1/2" BSP	M30x1,5	45	**ZFT22575U08**	**641,08**
3/4" BSP	M40x1,5	80	**ZFT22575U12**	**993,45**
1" BSP	M50x1,5	180	**ZFT22575U16**	**1.709,22**
1"1/4 BSP	M50x1,5	200	**ZFT22575U20**	**1.873,43**
1" 1/2 BSP	M55x2	200	**ZFT22575U24**	**3.372,22**
2" BSP	M65x2	200	**ZFT22575U32**	**4.469,25**

COMPONENTES HIDRÁULICOS AISI 316

Hydraulic Components AISI 316
Composants Hydrauliques AISI 316
Componenti Idraulici AISI 316

Anti-retorno en línea BSP

Check-valve line mounting BSP

Clapet antiretour simple en ligne BSP

Valvole di ritegno in linea BSP

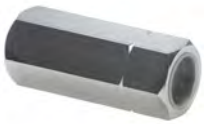

ROSCA THREAD	TARAJE (bar) SETTING (bar)	Referencia Part n°	€
1/4" BSP	0,5	Z FPR 1/4	57,90
1/4" BSP	2,5	Z FPR 1/4-2.5	104,98
1/4" BSP	5	Z FPR 1/4-5	104,98
1/4" BSP	10	Z FPR 1/4-10	104,98
3/8" BSP	0,5	Z FPR 3/8	66,48
3/8" BSP	2,5	Z FPR 3/8-2.5	113,04
3/8" BSP	5	Z FPR 3/8-5	113,04
3/8" BSP	10	Z FPR 3/8-10	145,34
1/2" BSP	0,5	Z FPR 1/2	75,48
1/2" BSP	2,5	Z FPR 1/2-2.5	134,58
1/2" BSP	5	Z FPR 1/2-5	134,58
1/2" BSP	10	Z FPR 1/2-10	134,58
3/4" BSP	0,5	Z FPR 3/4	133,69
1" BSP	0,5	Z FPR 1	206,26
1" 1/4 BSP	0,5	Z FPR 1 1/4	365,65
1" 1/2 BSP	0,5	Z FPR 1 1/2	441,60

Para otras presiones de tarado estandard, consultar. */ For other standard spring pressures, consult us.* / Pour d'autres pressions ressort standard, consultez-nous. */ Per altre pressioni di taratura standard, consultare.*

Antiretorno en línea BSP TrΔle®

Check-valve line mounting BSP TrΔle®

Clapet antiretour simple en ligne BSP TrΔle®

Valvole di ritegno in linea BSP TrΔle®

ROSCA THREAD	TARAJE (bar) SETTING (bar)	Referencia Part n°	€
1/4" BSP	0,5	ZVT001004	28,86
3/8" BSP	0,5	ZVT001006	35,87
1/2" BSP	0,5	ZVT001008	45,97
3/4" BSP	0,5	ZVT001012	69,92

Para otras presiones de tarado estandard, consultar. */ For other standard spring pressures, consult us.* / Pour d'autres pressions ressort standard, consultez-nous. */ Per altre pressioni di taratura standard, consultare.*

Limitadoras en línea BSP

NEW

Relief valves in line BSP

Limiteurs de pression en ligne BSP

Valvole de regolazione in linea BSP

ROSCA THREAD	CAMPO REG, (bar) REG RATE (bar)	CAUDAL MÁX. MAX. FLOW (l/min)	Referencia Part n°	€
1/2" BSP	25-100	40	ZLIM1225100	425,72
1/2" BSP	60-210	40	ZLIM1260210	425,72
1/2" BSP	100-300	40	ZLIM12100300	425,72

DICSA

COMPONENTES HIDRÁULICOS Y NEUMÁTICOS

www.dicsaes.com

HYDRAULIC & PNEUMATIC COMPONENTS

CONSULTA EL CATÁLOGO DE COMPONENTES

REQUEST ON CATALOGUE COMPONENTS

DEPOSITOS, FILTROS, CAMPANAS Y ACOPLAMIENTOS Δ TANKS, FILTERS, BELLHOUSINGS & COUPLINGS

BOMBAS, DIVISORES DE CAUDAL Y MULTIPLICADORES Δ PUMPS, GEAR FLOW DIVIDERS & MULTIGEAR

VÁLVULAS HIDRÁULICAS Y DISTRIBUIDORES HIDRÁULICOS Δ HYDRAULIC VALVES & HYDRAULIC CONTROL VALVES

ELECTROVÁLVULAS, PLACAS BASE, EMPUÑADURAS Y SELECTORAS Δ DIRECTIONAL VALVES,SUBPLATES, JOYSTICKS & DIRECTIONAL VALVES

ACUMULADORES, PRESOSTATOS E INTERCAMBIADORES DE CALOR Δ ACCUMULATORS, PRESSURE SWITCHES & HEAT EXCHANGERS

MINICENTRALES, MOTORES LENTOS HIDRÁULICOS y CILINDROS HIDRÁULICOS Δ HYDRAULIC MOTORS, MINI POWER PACKS & HYDRAULIC CYLINDERS

RACORES DE CONTROL 261
Test couplings
Prises de pression
Prese di pressione

CONEXIONES MICRO-HOSE 262
Micro-hose fittings
Embouts Capillaire
Raccordi Micro-tubo

INSTRUMENTOS DE MEDICIÓN 263
Pressure gauges AISI 316 with glycerin
Manomètre AISI 316 avec glycérine
Manometri AISI 316 a bagno di glicerina

09

METROLOGÍA

Flow measuring
Test du circuit hydraulique
Test per circuiti idraulici

RACORES DE CONTROL

Test couplings
Prises de pression
Prese di pressione

Racores de Control ▪ Checking fittings ▪ Prises de pression ▪ Prese di pressione

Z MPR...C/J

Z MPR TLM

Z MPR DL/S

Z MPR...NPT

Z MPR M...C/J

CONEXIONES MICRO-HOSE

Micro-hose fittings
Embouts Capillaire
Raccordi Micro-tubo

Conexiones Micro-hose ▪ Micro-hose fittings ▪ Embouts Capillaire ▪ Raccordi Micro-tubo | 262

Z55501

Z55505

Z55506

Z55504

Z55507

Z55503

Z55509

Z5550795

INSTRUMENTOS DE MEDICIÓN

Pressure gauges AISI 316 with glycerin
Manomètre AISI 316 avec glycérine
Manometri AISI 316 a bagno di glicerina

Manómetros inox glicerina DN 63 ▪ Pressure gauge DN 63 with glycerin ▪ Manomètre avec glycérine DN 63 ▪ Manometro DN 63 a bagno di glicerina | 263

ZMFI63..V

ZMFI63..DB

Manómetros inox glicerina DN 100 ▪ Pressure gauge DN 100 with glycerin ▪ Manomètre avec glycérine DN 100 ▪ Manometro DN 100 a bagno di glicerina | 263

ZMFI100..V

ZMFI100..DB

Protectores manómetros ▪ Valves for manometers ▪ Valves pour manomètres ▪ Esclusori per manometro | 264

Z FPE

Z FPEA

ZFT2299

RACORES DE CONTROL

Test couplings
Prises de pression
Prese di pressione

Racores de control BSP con junta y capuchón metálico

Check couplings with captive seal and metallic cap

Prises de pression avec joint plat et capouchon métallique

Mini-prese di controllo BSP con guarnizione y tappo metallico

ROSCA THREAD	Referencia Part n°	€
1/8" BSP	**Z MPR 1/8 G**	**49,99**
1/4" BSP	**Z MPR 1/4 G**	**50,17**
3/8" BSP	**Z MPR 3/8 G**	**64,21**
1/2" BSP	**Z MPR 1/2 G**	**65,88**

Racores de control TLM con capuchón metálico

TLM Check couplings with metallic cap

Prises de pression TLM avec capouchon métallique

Mini-prese di controllo TLM con tappo metallico

TUBO PIPE	SERIE SERIES	ROSCA THREAD	Referencia Part n°	€
6	L	M12x1.5	**Z MPR TLM 6L**	**119,04**
8	L	M14x1.5	**Z MPR TLM 8L**	**122,13**
10	L	M16x1.5	**Z MPR TLM 10L**	**107,02**
12	L	M18x1.5	**Z MPR TLM 12L**	**108,13**
15	L	M22X1,5	**Z MPR TLM 15L**	**113,19**
6	S	M14x1.5	**Z MPR TLM 6S**	**120,59**
8	S	M16x1.5	**Z MPR TLM 8S**	**108,13**
10	S	M18x1.5	**Z MPR TLM 10S**	**109,56**
12	S	M20x1.5	**Z MPR TLM 12S**	**109,80**

Racor de control intermedio para tubo metálico

Halfway check fitting for metal tube

Raccord intermédiaire pour tube métallique

Mini presa di controllo Intermedia per tubo metallico

TUBO PIPE	SERIE SERIES	ROSCA THREAD	Referencia Part n°	€
6	L	M12X1,5	**Z MPR DL 6**	**129,85**
8	L	M14X1,5	**Z MPR DL 8**	**136,04**
10	L	M16X1,5	**Z MPR DL 10**	**146,86**
12	L	M18X1,5	**Z MPR DL 12**	**132,96**
15	L	M22X1,5	**Z MPR DL 15**	**145,31**
18	L	M26X1,5	**Z MPR DL 18**	**166,96**
22	L	M30X2	**Z MPR DL 22**	**188,60**
28	L	M36X2	**Z MPR DL 28**	**285,99**
35	L	M45X2	**Z MPR DL 35**	**301,45**
42	L	M52X2	**Z MPR DL 42**	**275,18**
6	S	M14X1,5	**Z MPR DS 6**	**129,85**
8	S	M16X1,5	**Z MPR DS 8**	**142,24**
10	S	M16X1,5	**Z MPR DS 10**	**151,51**
12	S	M18X1,5	**Z MPR DS 12**	**140,69**
14	S	M22X1,5	**Z MPR DS 14**	**163,86**
16	S	M24X1,5	**Z MPR DS 16**	**151,51**
20	S	M30X2	**Z MPR DS 20**	**193,25**
25	S	M36X2	**Z MPR DS 25**	**239,61**
30	S	M42X2	**Z MPR DS 30**	**290,61**
38	S	M52X2	**Z MPR DS 38**	**290,61**

Racores de control NPT con capuchón metálico

NPT Check couplings with metallic cap

Prises de pression NPT avec capouchon métallique

Mini-prese di controllo NPT con tappo metallico

ROSCA THREAD	Referencia Part n°	€
1/8" NPT	**Z MPR 1/8 NPT**	**64,21**
1/4" NPT	**Z MPR 1/4 NPT**	**64,21**
3/8" NPT	**Z MPR 3/8 NPT**	**64,21**

Racores de control Métrico con Junta y capuchón metal NEW

Metric Check couplings with captive seal and metallic cap

Prises de pression métrique avec joint plat et capouchon métallique

Mini-prese di controllo Metrica con guarnizione y tappo metallico

ROSCA THREAD	Referencia Part n°	€
M10X1.5	**Z MPR M 10X1.5**	**62,49**
M12X1.5	**Z MPR M 12X1.5**	**62,49**
M14X1.5	**Z MPR M 14X1.5**	**60,88**
M16X1.5	**Z MPR M 16X1.5**	**60,88**

CONEXIONES MICRO-HOSE

Micro-hose fittings
Embouts Capillaire
Raccordi Micro-tubo

Casquillos AISI-303

Ferrules AISI -303

Jupes AISI-303

Boccole AISI-303

DN	Referencia Part n°	€
2	Z555010100	2,88

Hembra asiento plano con junta manómetro

Swivel female flat seat with o'ring for manometer Micro-hose

Embout femelle tournante fond plat avec o'ring pour manomètre Minimess

Femmina sede piana con o'ring per manometro

DN	ROSCA THREAD	Referencia Part n°	€
2	1/4" BSP	Z555050404	17,42
2	1/2" BSP	Z555050808	29,50

Hembra giratoria de control

Check Metric swivel female Micro-hose

Embout femelle tournante de control Métrique Minimess

Presa di pressione femmina

DN	ROSCA THREAD	Referencia Part n°	€
2	M16X2	Z555069523	18,57

Hembra giratoria BSP 60°

Straight swivel female BSP 60° cone micro-hose

Embout femelle tournante gaz cyl BSP 60° Minimess

Femmina girevole BSP

DN	ROSCA THREAD	Referencia Part n°	€
2	1/8" BSP	Z555040202	32,66
2	1/4" BSP	Z555040404	17,81
2	3/8" BSP	Z555040606	28,84

Espiga lisa Métrica

Metric standpipe Micro-hose

Embout lisse Métrique Minimess

Estremitá tubolare Metrica

DN	TUBO PIPE	Referencia Part n°	€
2	6	Z555070600	8,36
2	8	Z555070800	11,64

Macho de control

Straight Micro-hose check male

Embout mâle manomètre

Presa di pressione maschio

DN	Referencia Part n°	€
2	Z555030325	9,93

Hembra giratoria recta JIC 37°

NEW

Straight swivel female JIC 37° Micro-hose

Embout femelle tournante JIC 37° Minimess

Femmina diritta JIC 37°

DN	ROSCA THREAD	Referencia Part n°	€
2	7/16" 20h UNF	Z555090700	24,17

Hembra giratoria Métrica con Junta

NEW

Check 24° Metric swivel female with o´ring

Embout femelle tournante de control Métrique 24° avec o´ring

Presa di pressione femmina metrica 24° con o´ring

DN	TUBO PIPE	ROSCA THREAD	Referencia Part n°	€
2	6L	M12X1,5	Z555079510	12,60
2	6S	M14X1,5	Z555079511	26,77
2	8L	M14X1,5	Z555079512	28,41
2	8S	M16X1,5	Z555079523	29,85
2	10L	M16X1,5	Z555079525	32,66

INSTRUMENTOS DE MEDICIÓN

Pressure gauges AISI 316 with glycerin
Manomètre AISI 316 avec glycérine
Manometri AISI 316 a bagno di glicerina

Manómetros DN 63 salida vertical

Pressure gauge DN 63 vertical connection

Manomètre DN 63 sortie verticale

Manometro DN 63 radiale

ROSCA THREAD	ESCALA (bar) SCALE (bar)	Referencia Part n°	€
1/4" BSP	0-2.5	ZMFI6304002.5V	*
1/4" BSP	0-4	ZMFI6304004V	*
1/4" BSP	0-6	ZMFI6304006V	30,41
1/4" BSP	0-10	ZMFI6304010V	30,41
1/4" BSP	0-16	ZMFI6304016V	30,41
1/4" BSP	0-25	ZMFI6304025V	30,41
1/4" BSP	0-40	ZMFI6304040V	30,41
1/4" BSP	0-60	ZMFI6304060V	30,41
1/4" BSP	0-100	ZMFI6304100V	30,41
1/4" BSP	0-160	ZMFI6304160V	30,41
1/4" BSP	0-250	ZMFI6304250V	30,41
1/4" BSP	0-400	ZMFI6304400V	30,41
1/4" BSP	0-600	ZMFI6304600V	30,41

Manómetros DN 63 dorsal

Pressure gauge DN 63 rear connection

Manomètre DN 63 sortie arrière

Manometro DN 63 assiale flangiato

ROSCA THREAD	ESCALA (bar) SCALE (bar)	Referencia Part n°	€
1/4" BSP	0-2.5	ZMFI63042.5DB	*
1/4" BSP	0-10	ZMFI6304010DB	33,80
1/4" BSP	0-16	ZMFI6304016DB	33,80
1/4" BSP	0-25	ZMFI6304025DB	33,80
1/4" BSP	0-60	ZMFI6304060DB	33,80
1/4" BSP	0-160	ZMFI6304160DB	33,80
1/4" BSP	0-250	ZMFI6304250DB	33,80
1/4" BSP	0-400	ZMFI6304400DB	33,80

Manómetros DN 100 salida vertical

Pressure gauge DN 100 vertical connection

Manomètre DN 100 sortie verticale

Manometro DN 100 radiale

ROSCA THREAD	ESCALA (bar) SCALE (bar)	Referencia Part n°	€
1/2" BSP	0-6	ZMFI10008006V	51,72
1/2" BSP	0-10	ZMFI10008010V	51,72
1/2" BSP	0-16	ZMFI10008016V	51,72
1/2" BSP	0-25	ZMFI10008025V	51,72
1/2" BSP	0-40	ZMFI10008040V	51,72
1/2" BSP	0-60	ZMFI10008060V	51,72
1/2" BSP	0-100	ZMFI10008100V	51,72
1/2" BSP	0-160	ZMFI10008160V	51,72
1/2" BSP	0-250	ZMFI10008250V	51,72
1/2" BSP	0-400	ZMFI10008400V	51,72
1/2" BSP	0-600	ZMFI10008600V	51,72

Manómetros DN 100 dorsal

Pressure gauge DN 100 rear connection

Manomètre DN 100 sortie arrière

Manometro DN 100 assiale flangiato

ROSCA THREAD	ESCALA (bar) SCALE (bar)	Referencia Part n°	€
1/2" BSP	0-1	ZMFI10008001DB	55,67
1/2" BSP	0-4	ZMFI10008004DB	55,67
1/2" BSP	0-6	ZMFI10008006DB	55,67
1/2" BSP	0-10	ZMFI10008010DB	55,67
1/2" BSP	0-16	ZMFI10008016DB	55,67
1/2" BSP	0-25	ZMFI10008025DB	55,67
1/2" BSP	0-40	ZMFI10008040DB	55,67
1/2" BSP	0-60	ZMFI10008060DB	55,67
1/2" BSP	0-100	ZMFI10008100DB	55,67
1/2" BSP	0-160	ZMFI10008160DB	55,67
1/2" BSP	0-250	ZMFI10008250DB	55,67
1/2" BSP	0-400	ZMFI10008400DB	*

*Consultar / On request/ Sur demande / Su richiesta

INSTRUMENTOS DE MEDICIÓN

Pressure gauges AISI 316 with glycerin
Manomètre AISI 316 avec glycérine
Manometri AISI 316 a bagno di glicerina

Protector manómetro recto

Pressure gauge protector (line mounting)

Isolateur de manomètre droit (en ligne)

Esclusore per manometro diritto

ROSCA THREAD		Referencia Part n°	€
1/4" BSP	1/4" BSPT	**Z FPE 1G 1/4**	**201,15**

Protector manómetro 90°

90° pressure gauge protector (line mounting)

Isolateur de manomètre coudé a 90° (en ligne)

Esclusore per manometro a 90°

ROSCA THREAD		Referencia Part n°	€
1/4" BSP	1/4" BSPT	**Z FPEA 1G 1/4**	**201,15**

Adaptador para manómetro en línea TL-MF

Pressure gauge adaptor (in line) SF-FM

Adapteur pour manomètre (en ligne) TL-MF

Esclusore per manometro M-F

ROSCA (/M) THREAD (M)	ROSCA (H) THREAD /F)	Referencia Part n°	€
1/4" BSPT	1/4" BSP	**ZFT229904**	**70,70**
1/2" BSPT	1/2" BSP	**ZFT229908**	**94,38**

La calidad garantiza el *mejor rendimiento*.

Emisión de certificados
Issuance of Certificates

Certificados de prueba
Test Certificates

Validación de diseños
Design Validation Tests

ISO 9001
BUREAU VERITAS Certification

Controles de calidad
Quality Control

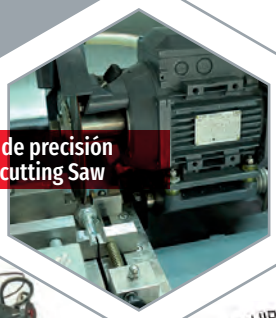

Cortadora de precisión
Precision cutting Saw

Banco de prueba Bimal B1703 Flex
B1703 FLEX Dynamic Test Bench

Durómetro Vickers
Vickers Hardness

MARINE EQUIPMENT DIRECTIVE
DNV
2014/90/EU

Máquina de medición 3D MMC
Coordinate measuring machine (CMM)

Banco de prueba Bimal BI1001
Bimal BI1001 Test Bench

ABS
TYPE APPROVED PRODUCT

Análisis espectrográfico
Spectrographic Analyzer

Banco de pruebas BE 2500 II
BE 2500 II Test Bench

Abrasiómetro
Abrasiometer

Cámara de niebla salina
Salt- spray chamber

Quality guarantees the *best performance*.

RACOR DOBLE ANILLO TRALE® LOK

Twin Ferrule Fittings TRALE LOK
Raccords double bague TRALE LOK
Raccordi per doppio anello TRALE LOK

10

TRALE® LOK

Twin Ferrule Fittings TRALE LOK
Raccords double bague TRALE LOK
Raccordi per doppio anello TRALE LOK

RACOR DOBLE ANILLO TRALE® LOK

Twin Ferrule Fittings TRALE LOK
Raccords double bague TRALE LOK
Raccordi per doppio anello TRALE LOK

Tuercas y anillos ▪ Nuts and rings ▪ Écrous et bagues ▪ Dadi e anelli | 271

ZKN

ZKAP

ZKAF

Uniones tubo-tubo ▪ Straight couplings ▪ Raccords union double ▪ Raccordi intermedi | 272

ZKI

ZKL

ZKI

ZKT

ZKC

Uniones rectas tubo-rosca macho ▪ Straight male stud couplings ▪ Raccords union simple mâle ▪ Raccordi di estremitá diritti | 274

ZKIMP

ZKIM

Codos tubo-rosca ▪ Male stud elbows ▪ Raccords coude mâle gaz ▪ Raccordi di estremitá a 90° | 275

ZKLMP

ZKLM

TES rosca central ▪ Male stud branch ▪ Raccords Té mâle central ▪ Raccordi di estremitá a T | 275

ZKTMP

TES rosca lateral ▪ Male stud barrel ▪ Raccords Té mâle latéral ▪ Raccordi di estremitá a L | 276

ZKTLMP

Pasatabiques ▪ Bulkhead ▪ Raccords passe cloison ▪ Raccordi di attraversamento | 276

ZKIB

ZKIBP

Racor recto hembra ▪ Straight female coupling ▪ Raccords droits femelle ▪ Raccordi diritti con estremitá femmina | 277

ZKIHP

Tapones ▪ Plugs ▪ Raccords bouchon métrique ▪ Tappi | 278

ZKOH

ZKOM

RACOR DOBLE ANILLO TRALE® LOK

Twin Ferrule Fittings TRALE LOK
Raccords double bague TRALE LOK
Raccordi per doppio anello TRALE LOK

Conectores para tubo ▪ Pipe connector ▪ Connecteur de tuyau ▪ Connettore per tubi | 278

ZKIA

ZKIAMP

ZKIAHP

TRΔLE® LOK SERIES

INFORMACIÓN DE CODIFICACIÓN / *CODIFICATION INFORMATION*

1 EJEMPLO- EXAMPLE

ZKTK

ZK: DICSA TRΔLE® LOK SERIES

T: FIGURA (RACOR EN TE)/ ***FIGURE (TE UNION)***

02: Ø Tubo (02 = 1/8")
Ø Tube (02 = 1/8")

2 EJEMPLO- EXAMPLE

ZKIMP0202

ZK: DICSA TRΔLE® LOK SERIES

IM: RACOR RECTO ROSCA TUBO/ ***STRAIGHT MALE STUD***

P02: MACHO 1/8" NPT
MALE 1/8" NPT

02: Ø Tubo (02 = 1/8")
Ø Tube (02 = 1/8")

REF / CODE	DESCRIPCION / DESCRIPTION
ZKN	Tuercas / *Nuts*
ZKAP	Anillo trasero / *Back Ferrule*
ZKAF	Anillo frontal / *Front Ferrule*
ZKI	Unión recta / *Straight Union*
ZKL	Unión en codo / *Elbow Union*
ZKT	Unión en T / *Tee Union*
ZKC	Unión en cruz / *Cross Union*
ZKIM	Unión recta tubo-rosca / *Straight male stud*
ZKLMP	Codo tubo - rosca / *Male stud elbow*
ZKTMP	T tubo - rosca / *Male stud T*
ZKTLM	L tubo - rosca / *Male stud L*
ZKIB	Pasatabiques recto / *Straight bukhead*
ZKIBP	Pasatabiques tubo-rosca/ *Male stud bulkhead*
ZKIHP	Unión tubo-rosca hembra/ *Straight female stud*
ZKOH	Tapón hembra / *Cap*
ZKOM	Tapón macho / *Plug*
ZKIA	Reductor tubo / *Pipe Reducer*
ZKIAH	Adap. hembra / *Female adapter*
ZKIMP	Adap macho / *Male adapter*

DESIGNACIÓN DE TUBO EXTERIOR/ *TUBE O.D. DESIGNATOR*

TUBO EN PULGADAS/ *FRACTIONAL TUBE*								TUBO MÉTRICO / *METRIC TUBE*										
1/8"	1/4"	5/16"	3/8"	1/2"	5/8"	3/4"	1"	6	8	10	12	14	15	16	18	20	22	25
02	04	05	06	08	10	12	16	06M	08M	10M	12M	14M	15M	16M	18M	20M	22M	25M

RACOR DOBLE ANILLO TRALE® LOK

Twin Ferrule Fittings TRALE LOK
Raccords double bague TRALE LOK
Raccordi per doppio anello TRALE LOK

Tuercas para doble anillo

Nut for twin-ferrule

Écrou double bagues

Dado per doppia ghiera

TUBO PIPE	Referencia Part n°	€
1/8"	ZKN02	5,20
1/4"	ZKN04	5,40
5/16"	ZKN05	*
3/8"	ZKN06	6,45
1/2"	ZKN08	8,50
5/8"	ZKN10	*
3/4"	ZKN12	19,55
1"	ZKN16	38,13
6	ZKN06M	5,40
8	ZKN08M	5,95
10	ZKN10M	6,80
12	ZKN12M	8,40
14	ZKN14M	*
15	ZKN15M	18,07
16	ZKN16M	*
18	ZKN18M	27,76
20	ZKN20M	*
22	ZKN22M	*
25	ZKN25M	*

Anillo frontal

Front Ferrule

Bague avant

Ghiera frontale

TUBO PIPE	Referencia Part n°	€
1/8"	ZKAF02	1,95
1/4"	ZKAF04	1,95
5/16"	ZKAF05	*
3/8"	ZKAF06	2,10
1/2"	ZKAF08	3,35
5/8"	ZKAF10	*
3/4"	ZKAF12	6,55
1"	ZKAF16	10,83
6	ZKAF06M	1,95
8	ZKAF08M	2,10
10	ZKAF10M	2,20
12	ZKAF12M	3,30
14	ZKAF14M	*
15	ZKAF15M	6,55
16	ZKAF16M	*
18	ZKAF18M	10,15
20	ZKAF20M	*
22	ZKAF22M	*
25	ZKAF25M	*

Anillo posterior

Back Ferrule

Bague arrière

Indietro ghiera

TUBO PIPE	Referencia Part n°	€
1/8"	ZKAP02	2,15
1/4"	ZKAP04	2,25
5/16"	ZKAP05	*
3/8"	ZKAP06	2,60
1/2"	ZKAP08	4,20
5/8"	ZKAP10	*
3/4"	ZKAP12	9,15
1"	ZKAP16	17,16
6	ZKAP06M	2,25
8	ZKAP08M	2,45
10	ZKAP10M	2,65
12	ZKAP12M	4,10
14	ZKAP14M	*
15	ZKAP15M	8,00
16	ZKAP16M	*
18	ZKAP18M	11,86
20	ZKAP20M	*
22	ZKAP22M	*
25	ZKAP25M	*

*Consultar / On request/ Sur demande / Su richiesta

RACOR DOBLE ANILLO TRALE® LOK

Twin Ferrule Fittings TRALE LOK
Raccords double bague TRALE LOK
Raccordi per doppio anello TRALE LOK

Racor unión recta tubo - tubo

Double Straight coupling

Raccord union double

Raccordo intermedio diritto

TUBO PIPE	Referencia Part n°	€
1/8"	ZKI02	24,10
1/4"	ZKI04	24,95
5/16"	ZKI05	*
3/8"	ZKI06	28,35
1/2"	ZKI08	39,85
5/8"	ZKI10	*
3/4"	ZKI12	78,09
1"	ZKI16	*
6	ZKI06M	25,15
8	ZKI08M	27,00
10	ZKI10M	29,95
12	ZKI12M	39,55
14	ZKI14M	*
15	ZKI15M	67,26
16	ZKI16M	*
18	ZKI18M	67,85
20	ZKI20M	98,10
22	ZKI22M	*
25	ZKI25M	*

Racor unión en codo tubo - tubo

Equal elbow coupling

Raccord coude égal

Raccordo intermedio a 90°

TUBO PIPE	Referencia Part n°	€
1/8"	ZKL02	29,55
1/4"	ZKL04	30,15
5/16"	ZKL05	*
3/8"	ZKL06	35,10
1/2"	ZKL08	46,85
5/8"	ZKL10	*
3/4"	ZKL12	82,90
1"	ZKL16	150,70
6	ZKL06M	30,10
8	ZKL08M	33,70
10	ZKL10M	37,80
12	ZKL12M	46,25
14	ZKL14M	*
15	ZKL15M	*
16	ZKL16M	85,45
18	ZKL18M	89,70
20	ZKL20M	140,20
22	ZKL22M	*
25	ZKL25M	150,35

Racor unión recta en reducción tubo - tubo

Straight reducing coupling

Raccord union double en réduction

Raccordo di riduzione

TUBO PIPE			Referencia Part n°	€
1/4"	1/8"		ZKI0402	24,65
5/16"	1/4"	NEW	ZKI0504	*
3/8"	1/8"	NEW	ZKI0602	25,85
3/8"	1/4"		ZKI0604	26,25
1/2"	1/4"	NEW	ZKI0804	*
1/2"	3/8"		ZKI0806	34,65
5/8"	3/8"	NEW	ZKI1006	*
5/8"	1/2"	NEW	ZKI1008	*
3/4"	1/4"	NEW	ZKI1204	*
3/4"	3/8"	NEW	ZKI1206	*
3/4"	1/2"		ZKI1208	*
1"	1/2"	NEW	ZKI1608	*
1"	3/4"		ZKI1612	*
6	3	NEW	ZKI06M03M	*
8	6		ZKI08M06M	26,25
10	6	NEW	ZKI10M06M	26,80
10	8		ZKI10M08M	27,65
12	6	NEW	ZKI12M06M	33,25
12	8	NEW	ZKI12M08M	34,65
12	10		ZKI12M10M	35,55
16	12		ZKI16M12M	*
18	18		ZKI18M12M	49,75
25	18	NEW	ZKI25M18M	105,15
25	20		ZKI25M20M	112,15

Racor unión en T tubo - tubo

Equal Tee

Raccord Té égal

Raccordo intermedio a T

TUBO PIPE	Referencia Part n°	€
1/8"	ZKT02	42,30
1/4"	ZKT04	43,25
5/16"	ZKT05	*
3/8"	ZKT06	50,95
1/2"	ZKT08	67,00
5/8"	ZKT10	*
3/4"	ZKT12	*
1"	ZKT16	218,25
6	ZKT06M	43,20
8	ZKT08M	49,50
10	ZKT10M	51,75
12	ZKT12M	66,30
14	ZKT14M	*
15	ZKT15M	*
16	ZKT16M	*
18	ZKT18M	127,10
20	ZKT20M	202,15
22	ZKT22M	*
25	ZKT25M	217,75

*Consultar / On request / Sur demande / Su richiesta

RACOR DOBLE ANILLO TRALE® LOK

Twin Ferrule Fittings TRALE LOK
Raccords double bague TRALE LOK
Raccordi per doppio anello TRALE LOK

Racor unión en cruz tubo - tubo

Equal cross

Raccord croix égale

Raccordo intermedio a croce

TUBO PIPE	Referencia Part n°	€
1/8"	ZKC02	*
1/4"	ZKC04	*
5/16"	ZKC05	*
3/8"	ZKC06	*
1/2"	ZKC08	*
6	ZKC06M	*
8	ZKC08M	*
10	ZKC10M	*
12	ZKC12M	*

TrAle® Lok SERIES

Conexión libre de fugas,
Apta para entornos agresivos

Excellent tight sealing
Tube- gripping action

*Consultar / On request/ Sur demande / Su richiesta

RACOR DOBLE ANILLO TRALE® LOK

Twin Ferrule Fittings TRALE LOK
Raccords double bague TRALE LOK
Raccordi per doppio anello TRALE LOK

Racor recto rosca cónica NPT

Straight male stud coupling NPT

Raccord union simple mâle NPT

Raccordo di estremitá diritto NPT

TUBO PIPE	ROSCA THREAD		Referencia Part n°	€
1/16"	1/8"	NEW	ZKIMP0102	*
1/8"	1/16"	NEW	ZKIMP0201	*
1/8"	1/8"		ZKIMP0202	14,25
1/8"	1/4"		ZKIMP0204	14,75
1/8"	3/8"		ZKIMP0206	15,85
1/8"	1/2"		ZKIMP0208	19,15
1/4"	1/8"		ZKIMP0402	14,60
1/4"	1/4"		ZKIMP0404	15,10
1/4"	3/8"		ZKIMP0406	16,15
1/4"	1/2"		ZKIMP0408	19,50
3/8"	1/8"		ZKIMP0602	16,65
3/8"	1/4"		ZKIMP0604	16,95
3/8"	3/8"		ZKIMP0606	17,45
3/8"	1/2"		ZKIMP0608	20,15
3/8"	3/4"	NEW	ZKIMP0612	25,80
3/8"	1"	NEW	ZKIMP0616	45,70
1/2"	1/8"		ZKIMP0802	24,70
1/2"	1/4"		ZKIMP0804	24,70
1/2"	3/8"		ZKIMP0806	24,70
1/2"	1/2"		ZKIMP0808	26,00
1/2"	3/4"	NEW	ZKIMP0812	35,10
3/4"	3/8"	NEW	ZKIMP1206	46,00
3/4"	1/2"	NEW	ZKIMP1208	47,15
3/4"	3/4"	NEW	ZKIMP1212	53,95
3/4"	1/4"	NEW	ZKIMP1216	59,25
1"	1/2"	NEW	ZKIMP1608	77,85
1"	3/4"	NEW	ZKIMP1612	79,95
1"	1"	NEW	ZKIMP1616	82,45
3	1/8"	NEW	ZKIMP03M02	*
6	1/8"		ZKIMP06M02	14,80
6	1/4"		ZKIMP06M04	15,05
6	3/8"		ZKIMP06M06	16,30
6	1/2"		ZKIMP06M08	19,35
8	1/8"		ZKIMP08M02	15,85
8	1/4"		ZKIMP08M04	16,10
8	3/8"		ZKIMP08M06	17,00
8	1/2"		ZKIMP08M08	20,85
10	1/8"		ZKIMP10M02	18,60
10	1/4"		ZKIMP10M04	19,00
10	3/8"		ZKIMP10M06	19,00
10	1/2"		ZKIMP10M08	21,80
10	3/4"	NEW	ZKIMP10M12	34,85
12	1/4"		ZKIMP12M04	24,75
12	3/8"		ZKIMP12M06	24,75
12	1/2"		ZKIMP12M08	25,35
14	3/8"	NEW	ZKIMP14M06	*
14	1/2"	NEW	ZKIMP14M08	*
15	1/2"	NEW	ZKIMP15M08	*
16	1/4"	NEW	ZKIMP16M04	*
16	3/8"	NEW	ZKIMP16M06	*
16	1/2"	NEW	ZKIMP16M08	*
16	3/4"	NEW	ZKIMP16M12	*
18	1/2"	NEW	ZKIMP18M08	*
18	3/4"	NEW	ZKIMP18M12	*
22	3/4"	NEW	ZKIMP22M12	*
22	1"	NEW	ZKIMP22M16	*
25	1/2"	NEW	ZKIMP25M08	77,30
25	3/4"	NEW	ZKIMP25M12	79,80
25	1"	NEW	ZKIMP25M16	82,30

Racor recto rosca cónica BSPT

Straight male stud coupling BSPT

Raccord union simple mâle conique

Raccordo di estremitá diritto BSP conico

TUBO PIPE	ROSCA THREAD		Referencia Part n°	€
1/8	1/8"	NEW	ZKIM0202	14,25
1/8	1/4"	NEW	ZKIM0204	14,75
1/4"	1/8	NEW	ZKIM0402	14,60
1/4"	1/4"		ZKIM0404	15,10
1/4"	3/8"	NEW	ZKIM0406	16,15
1/4"	1/2"	NEW	ZKIM0408	19,50
3/8"	1/8"	NEW	ZKIM0602	16,65
3/8"	1/4"		ZKIM0604	16,95
3/8"	3/8"		ZKIM0606	17,45
3/8"	1/2"	NEW	ZKIM0608	20,15
3/8"	3/4"	NEW	ZKIM0612	30,10
1/2"	1/4"		ZKIM0804	24,70
1/2"	3/8"		ZKIM0806	24,70
1/2"	1/2"		ZKIM0808	26,00
1/2"	3/4"	NEW	ZKIM0812	35,10
3/4"	3/4"	NEW	ZKIM1212	53,95
3/4"	1"	NEW	ZKIM1216	59,25
1"	3/4"	NEW	ZKIM1612	79,95
6	1/8"	NEW	ZKIM06M02	14,80
6	1/4"		ZKIM06M04	15,05
6	3/8"		ZKIM06M06	16,30
6	1/2"		ZKIM06M08	19,35
8	1/8"	NEW	ZKIM08M02	15,85
8	1/4"	NEW	ZKIM08M04	16,10
8	3/8"		ZKIM08M06	17,00
8	1/2"		ZKIM08M08	20,85
10	1/8"	NEW	ZKIM10M02	18,60
10	1/4"	NEW	ZKIM10M04	*
10	3/8"		ZKIM10M06	19,00
10	1/2"		ZKIM10M08	21,80
12	3/8"	NEW	ZKIM12M06	24,75
12	1/2"		ZKIM12M08	31,19
16	1/4"	NEW	ZKIM16M04	*
16	3/8"	NEW	ZKIM16M06	*
16	1/2"	NEW	ZKIM16M08	*
16	3/4"	NEW	ZKIM16M12	*
18	1/2"	NEW	ZKIM18M08	48,65
18	3/4"	NEW	ZKIM18M12	52,15
22	3/4"	NEW	ZKIM22M12	*
22	1"	NEW	ZKIM22M16	*
25	3/4"	NEW	ZKIM25M12	79,80
25	1"	NEW	ZKIM25M16	82,30
25	1/2"	NEW	ZKIM25M08	77,30

*Consultar / On request / Sur demande / Su richiesta

RACOR DOBLE ANILLO TRALE® LOK

Twin Ferrule Fittings TRALE LOK
Raccords double bague TRALE LOK
Raccordi per doppio anello TRALE LOK

Racor en codo rosca cónica NPT

Male stud elbow NPT

Raccord union coude mâle NPT

Raccordo di estremitá a 90° NPT

TUBO PIPE	ROSCA THREAD		Referencia Part n°	€
1/8"	1/8"		ZKLMP0202	21,45
1/8"	1/4"		ZKLMP0204	22,00
1/8"	3/8"		ZKLMP0206	24,25
1/4"	1/8"		ZKLMP0402	21,80
1/4"	1/4"		ZKLMP0404	22,30
1/4"	3/8"		ZKLMP0406	24,25
1/4"	1/2"		ZKLMP0408	30,15
3/8"	1/8"		ZKLMP0602	25,55
3/8"	1/4"		ZKLMP0604	25,55
3/8"	3/8"		ZKLMP0606	25,55
3/8"	1/2"		ZKLMP0608	32,00
3/8"	3/4"	NEW	ZKLMP0612	47,05
1/2"	1/4"		ZKLMP0804	33,55
1/2"	3/8"		ZKLMP0806	33,55
1/2"	1/2"		ZKLMP0808	35,70
3/4"	1/2"	NEW	ZKLMP1208	63,05
3/4"	3/4"	NEW	ZKLMP1212	63,05
1"	3/4"	NEW	ZKLMP1612	107,35
1"	1"	NEW	ZKLMP1616	107,35
16	1/4"	NEW	ZKLMP16M04	*
16	3/8"	NEW	ZKLMP16M06	*
6	1/8"		ZKLMP06M02	21,80
6	1/4"		ZKLMP06M04	22,25
16	1/2"	NEW	ZKLMP16M08	*
16	3/4"	NEW	ZKLMP16M12	*
6	3/8"		ZKLMP06M06	24,25
6	1/2"		ZKLMP06M08	30,75
8	1/8"		ZKLMP08M02	24,10
8	1/4"		ZKLMP08M04	24,10
8	3/8"		ZKLMP08M06	24,55
8	1/2"		ZKLMP08M08	31,55
10	1/8"		ZKLMP10M02	27,75
10	1/4"		ZKLMP10M04	27,75
10	3/8"		ZKLMP10M06	27,75
10	1/2"		ZKLMP10M08	31,85
12	1/4"		ZKLMP12M04	33,30
12	3/8"		ZKLMP12M06	33,30
12	1/2"		ZKLMP12M08	35,45
12	3/4"	NEW	ZKLMP12M12	50,50
18	1/2"	NEW	ZKLMP18M08	59,75
18	3/4"	NEW	ZKLMP18M12	*
22	3/4"	NEW	ZKLMP22M12	*
22	1"	NEW	ZKLMP22M16	*
25	3/4"	NEW	ZKLMP25M12	107,20
25	1"	NEW	ZKLMP25M16	107,20

Racor en codo rosca cónica BSPT

Male stud elbow BSPT

Raccord union coude mâle gaz conique

Raccordo di estremitá a 90° BSP conico

TUBO PIPE	ROSCA THREAD		Referencia Part n°	€
1/4"	1/4"		ZKLM0404	*
1/4"	3/8"		ZKLM0406	*
1/4"	1/2"		ZKLM0408	*
3/8"	3/8"		ZKLM0606	*
3/8"	1/2"		ZKLM0608	*
1/2"	1/2"		ZKLM0808	*
6	1/4"		ZKLM06M04	*
6	1/2"		ZKLM06M08	*
8	3/8"		ZKLM08M06	*
8	1/2"		ZKLM08M08	*
10	1/4"	NEW	ZKLM10M04	999,00
10	3/8"		ZKLM10M06	*
10	1/2"		ZKLM10M08	*
16	1/4"	NEW	ZKLM16M04	*
16	3/8"	NEW	ZKLM16M06	*
16	1/2"	NEW	ZKLM16M08	*
16	3/4"	NEW	ZKLM16M12	*
22	3/4"	NEW	ZKLM22M12	999,00
22	1"	NEW	ZKLM22M16	*

Racor en T rosca cónica NPT

Male stud branch TEE NPT

Raccord TÉ mâle NPT au centre

Raccordo di estremitá a T NPT

TUBO PIPE	ROSCA THREAD	Referencia Part n°	€
1/8"	1/8"	ZKTMP0202	*
1/8"	1/4"	ZKTMP0204	*
1/4"	1/8"	ZKTMP0402	*
1/4"	1/4"	ZKTMP0404	*
3/8"	1/4"	ZKTMP0604	*
3/8"	3/8"	ZKTMP0606	*
1/2"	3/8"	ZKTMP0806	*
1/2"	1/2"	ZKTMP0808	*
6	1/8"	ZKTMP06M02	*
6	1/4"	ZKTMP06M04	*
8	1/8"	ZKTMP08M02	*
8	1/4"	ZKTMP08M04	*
10	1/4"	ZKTMP10M04	*
10	3/8"	ZKTMP10M06	*
12	1/4"	ZKTMP12M04	*
12	3/8"	ZKTMP12M06	*
12	1/2"	ZKTMP12M08	*

*Consultar / On request/ Sur demande / Su richiesta

RACOR DOBLE ANILLO TRALE® LOK

Twin Ferrule Fittings TRALE LOK
Raccords double bague TRALE LOK
Raccordi per doppio anello TRALE LOK

Racor en L rosca cónica NPT

Male stud barrel TEE NPT

Raccord Té mâle NPT latéral Inox

Raccordo di estremitá a L NPT conico

TUBO PIPE	ROSCA THREAD	Referencia Part n°	€
1/8"	1/8"	ZKTLMP0202	*
1/8"	1/4"	ZKTLMP0204	*
1/4"	1/8"	ZKTLMP0402	*
1/4"	1/4"	ZKTLMP0404	*
3/8"	1/4"	ZKTLMP0604	*
3/8"	3/8"	ZKTLMP0606	*
1/2"	3/8"	ZKTLMP0806	*
1/2"	1/2"	ZKTLMP0808	*
6	1/8"	ZKTLMP06M02	*
6	1/4"	ZKTLMP06M04	*
8	1/8"	ZKTLMP08M02	*
8	1/4"	ZKTLMP08M04	*
10	1/4"	ZKTLMP10M04	*
10	1/2"	ZKTLMP10M08	*
12	1/4"	ZKTLMP12M04	*
12	3/8"	ZKTLMP12M06	*
12	1/2"	ZKTLMP12M08	*

Racor recto pasatabique con tuerca

Straight bulkhead coupling

Raccord droit union double passe cloison avec écrou

Raccordo passaparete

TUBO PIPE	Referencia Part n°	€
1/8"	ZKIB02	28,30
1/4"	ZKIB04	30,55
5/16"	ZKIB05	*
3/8"	ZKIB06	*
1/2"	ZKIB08	50,15
5/8"	ZKIB10	*
3/4"	ZKIB12	*
1"	ZKIB16	*
6	ZKIB06M	*
8	ZKIB08M	*
10	ZKIB10M	*
12	ZKIB12M	*
15	ZKIB15M	*
16	ZKIB16M	*
18	ZKIB18M	*
20	ZKIB20M	*
25	ZKIB25M	*

Racor recto - NPT pasatabique con tuerca

Straight bulkhead coupling- NPT

Raccord droit union double passe cloison avec écrou - NPT

Raccordo passaparete - NPT

TUBO PIPE	ROSCA THREAD	Referencia Part n°	€
1/8"	1/8"	ZKIBP0202	*
1/4"	1/4"	ZKIBP0404	*
3/8"	3/8"	ZKIBP0606	*
1/2"	1/2"	ZKIBP0808	*
3/4"	3/4"	ZKIBP1212	*
1"	1"	ZKIBP1616	*
6	1/8"	ZKIBP06M02	*
8	1/4"	ZKIBP08M04	*
10	3/8"	ZKIBP10M06	*
12	1/2"	ZKIBP12M08	*

*Consultar / On request / Sur demande / Su richiesta

RACOR DOBLE ANILLO TRALE® LOK

Twin Ferrule Fittings TRALE LOK
Raccords double bague TRALE LOK
Raccordi per doppio anello TRALE LOK

Racor recto hembra rosca NPT

Female stud coupling NPT

Raccord union simple femelle NPT

Raccordo diritto femmina NPT

TUBO PIPE	ROSCA THREAD		Referencia Part n°	€
1/8"	1/8"		ZKIHP0202	15,90
1/8"	1/4"		ZKIHP0204	17,45
1/8"	3/8"		ZKIHP0206	19,25
1/8"	1/2"		ZKIHP0208	22,25
1/4"	1/8"		ZKIHP0402	16,80
1/4"	1/4"		ZKIHP0404	18,45
1/4"	3/8"		ZKIHP0406	19,55
1/4"	1/2"		ZKIHP0408	23,60
3/8"	1/8"		ZKIHP0602	18,45
3/8"	1/4"		ZKIHP0604	19,65
3/8"	3/8"		ZKIHP0606	21,20
3/8"	1/2"		ZKIHP0608	25,30
3/8"	3/4"	NEW	ZKIHP0612	42,10
1/2"	1/8"		ZKIHP0802	24,55
1/2"	1/4"		ZKIHP0804	24,55
1/2"	3/8"		ZKIHP0806	25,40
1/2"	1/2"		ZKIHP0808	29,65
5/8"	1/2"		ZKIHP1008	*
3/4"	1/2"	NEW	ZKIHP1208	45,60
3/4"	3/4"		ZKIHP1212	79,50
1"	3/4"	NEW	ZKIHP1612	76,00
1"	1"		ZKIHP1616	126,00
6	1/8"		ZKIHP06M02	16,65
6	1/4"		ZKIHP06M04	18,30
6	3/8"		ZKIHP06M06	19,50
6	1/2"		ZKIHP06M08	24,15
8	1/8"	NEW	ZKIHP08M02	19,15
8	1/4"		ZKIHP08M04	19,15
8	3/8"		ZKIHP08M06	20,35
8	1/2"		ZKIHP08M08	24,65
10	1/4"		ZKIHP10M04	20,10
10	3/8"		ZKIHP10M06	21,40
10	1/2"		ZKIHP10M08	25,60
12	1/4"		ZKIHP12M04	25,00
12	3/8"		ZKIHP12M06	25,00
12	1/2"		ZKIHP12M08	29,15
16	1/2"		ZKIHP16M08	*
20	3/4"		ZKIHP20M12	66,60
22	3/4"		ZKIHP22M12	*
25	3/4"	NEW	ZKIHP25M12	77,30
25	1"		ZKIHP25M16	85,10
2"	2"	NEW	ZKIHP3232	*

Válvulas de instrumentación

Válvulas de aguja, Manifold, Antirretornos y Válvulas limitadoras de presión

BAJO CONSULTA

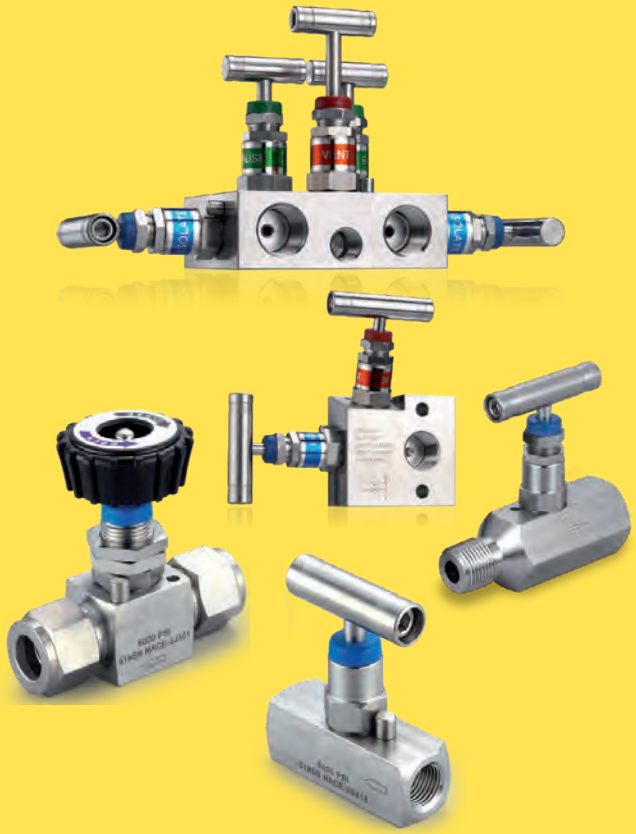

Instrument Valve

Needle Valve, Manifold,
Check and Proportional Relief Valve

ON REQUEST

*Consultar / On request/ Sur demande / Su richiesta

RACOR DOBLE ANILLO TRALE® LOK

Twin Ferrule Fittings TRALE LOK
Raccords double bague TRALE LOK
Raccordi per doppio anello TRALE LOK

Tapón de cierre hembra UNF

UNF plug closure

Bouchon de fermeture Femelle UNF

Tappo di chiusura femmina UNF

TUBO PIPE	Referencia Part n°	€
1/8"	ZKOH02	*
1/4"	ZKOH04	*
5/16"	ZKOH05	*
3/8"	ZKOH06	*
1/2"	ZKOH08	*
5/8"	ZKOH10	*
3/4"	ZKOH12	*
1"	ZKOH16	*
6	ZKOH06M	*
8	ZKOH08M	*
10	ZKOH10M	*
12	ZKOH12M	*
14	ZKOH14M	*
15	ZKOH15M	*
16	ZKOH16M	*
18	ZKOH18M	*
20	ZKOH20M	*
22	ZKOH22M	*
25	ZKOH25M	*

Tapón hexagonal macho UNF

UNF cap hexagon

Bouchon mâle hexagonale UNF

Tappo esagonale maschio UNF

TUBO PIPE	Referencia Part n°	€
1/8"	ZKOM02	*
1/4"	ZKOM04	22,57
5/16"	ZKOM05	*
3/8"	ZKOM06	*
1/2"	ZKOM08	33,65
5/8"	ZKOM10	*
3/4"	ZKOM12	62,81
1"	ZKOM16	92,25
6	ZKOM06M	12,60
8	ZKOM08M	13,75
10	ZKOM10M	15,25
12	ZKOM12M	*
14	ZKOM14M	*
15	ZKOM15M	39,05
16	ZKOM16M	*
18	ZKOM18M	*
20	ZKOM20M	*
22	ZKOM22M	*
25	ZKOM25M	*

Racor de Reducción tubo

Tube end reducer

Raccord de réduction

Riduttore di porta

TUBO PIPE		Referencia Part n°	€
1/4"	1/8"	ZKIA0402	*
3/8"	1/4"	ZKIA0604	*
1/2"	3/8"	ZKIA0806	*
3/4"	1/2"	ZKIA1208	*
8	6	ZKIA08M06M	*
10	8	ZKIA10M08M	*
12	10	ZKIA12M10M	*
16	12	ZKIA16M12M	*

Adaptador macho NPT

Male NPT adaptor

Adapteur Mâle NPT

Adattatore NPT maschio

TUBO PIPE	ROSCA THREAD		Referencia Part n°	€
1/8"	1/8"		ZKIAMP0202	*
1/4"	1/4"		ZKIAMP0404	*
3/8"	3/8"		ZKIAMP0606	*
1/2"	1/2"		ZKIAMP0808	*
6	1/8"		ZKIAMP06M02	*
8	1/4"		ZKIAMP08M04	*
10	1/4"	NEW	ZKIAMP10M04	999,00
10	3/8"		ZKIAMP10M06	*
10	1/2"	NEW	ZKIAMP10M08	999,00
12	1/2"		ZKIAMP12M08	*

Adaptador hembra NPT

Female NPT adaptor

Adapteur Femelle NPT

Adattatore NPT femmina

TUBO PIPE	ROSCA THREAD	Referencia Part n°	€
1/8"	1/8"	ZKIAHP0202	*
1/4"	1/4"	ZKIAHP0404	*
3/8"	3/8"	ZKIAHP0606	*
1/2"	1/2"	ZKIAHP0808	*
6	1/8"	ZKIAHP06M02	*
8	1/4"	ZKIAHP08M04	*
10	3/8"	ZKIAHP10M06	*
12	1/2"	ZKIAHP12M08	*

*Consultar / On request / Sur demande / Su richiesta

SOLICITE NUESTRAS ***TARIFAS GENERALES*** DE PRECIOS

Conducciones Hidráulicas y Neumáticas
Hydraulic and Pneumatic Connectors

Componentes Hidráulicos y Neumáticos
Hydraulic and Pneumatic Components

PLEASE, ASK FOR OUR ***GENERAL PRICE LISTS***

Condiciones de venta

General conditions of sale

GENERALIDADES

Estas condiciones así como las eventuales condiciones especiales acordadas en el contrato rigen para todas las entregas y todas las prestaciones. Las condiciones de compra del cliente que sean distintas a las aquí establecidas no llegarán a formar parte del contrato al aceptar el pedido. Los contratos se celebran, salvo en el caso de que se haya acordado lo contrario, mediante confirmación escrita del proveedor. En ningún caso, las Condiciones Generales y/o Especificas de Compra del Comprador, anularan o sustituirán estas Condiciones Generales de Venta.

La aceptación de nuestras ofertas implica tácitamente la de todas las condiciones aquí detalladas, salvo las especiales acordadas por escrito, particularmente en la misma Oferta o detalladas en nuestro acuse de recepción de pedido, únicos documentos que nos obligan ante el Cliente.

DICSA se reserva el derecho de propiedad y el derecho de propiedad intelectual de muestras, presupuestos, planos e información en forma material o inmaterial así como en forma electrónica; el acceso de terceros a éstos ha de impedirse.

OFERTAS Y PEDIDOS

Los precios se entienden, caso de no expresar lo contrario para mercadería situada en nuestro almacén, incluyendo el cargado de ésta, pero sin incluir el embalaje ni el transporte al lugar de recepción, ni impuestos –que serán siempre a cargo del comprador–, así como tampoco la puesta en marcha en el emplazamiento. Todas las operaciones de transporte, seguro, manutención y entrega son a cuenta y riesgo del Comprador.

Las ofertas incluyen solamente los materiales y artículos en ellas especificados disponibles en stock salvo agotamiento y por el plazo de validez determinado en las mismas.

Los estudios u ofertas de material están basados en los precios vigentes en la fecha de su realización, y si, debido a alteraciones en el coste de los materiales, modificación de aranceles o a cualquier otra causa, el nivel de precios fuese revisado, los precios que se aplicarían serían aquellos que rijan en la fecha del suministro, a menos que la oferta sea aceptada dentro del plazo de validez que en la misma se fije.

Los precios no incluyen, excepto notificación expresa, el montaje y la puesta en marcha de los materiales suministrados, los fluidos recomendados por los servicios técnicos de los fabricantes, los contenedores tanto rígidos como elásticos de los materiales, así como el estudio de implantación de los distintos materiales.

DICSA podrá variar el precio, como consecuencia de cualquier ley que afecte a materiales, salarios o a las horas de trabajo y también a posible cambios en la paridad de la moneda, en elementos de importación.

Los pedidos no serán tomados en consideración a menos que vengan acompañados de la cantidad a cuenta prevista en nuestra Oferta, si así se ha establecido.

La aceptación de la Oferta supondrá igualmente la aceptación sin reservas de estas Condiciones Generales de Venta.

ESTUDIOS, PLANOS Y DISEÑOS

La información relacionada con la oferta, tal como planos, diseños, dibujos catálogos y/u otra documentación técnica, es solamente informativa y tienen como objeto dar una imagen general de los materiales en ellos descritos, no formando parte del contrato a menos que haya habido algún acuerdo por escrito. DICSA no aceptará ningún tipo de responsabilidad por la inexactitud u omisión de dicha documentación.

El Cliente deberá hacer siempre un estudio previo de compatibilidad y de montaje de los elementos en su instalación y será el único responsable de la puesta en conformidad de dicha instalación con las distintas reglamentaciones vigentes.

En presupuestos, planos, esquemas y otras informaciones técnicas, mantendremos reservado el derecho de propiedad y de realización, no permitiendo que estos sean facilitados a terceros sin nuestro previo consentimiento escrito.

DICSA se reserva el derecho de propiedad de la mercancía suministrada hasta el pago completo del precio establecido. DICSA se reserva el derecho de propiedad de los planos de la mercancía, que no serán facilitados ni vendidos a terceros en ningún caso.

TRABAJOS *IN SITU*

Los presupuestos de los trabajos realizados en el lugar de la obra del cliente son considerados orientativos, debido a las características particulares y especiales que pueden representar, no pudiendo dar lugar, excepto acuerdo definitivo entre las partes, en precios definitivos.

REPARACIÓN

Los trabajos de reparación no se empezarán hasta la aceptación escrita, por parte del Cliente, del presupuesto y de las condiciones que se establezcan.

En el supuesto de que el presupuesto no sea aceptado por el Cliente en el plazo de un mes, los gastos derivados del desmontaje, almacenaje, peritaje y portes correrán a cargo del Cliente. Si el Cliente solicita la reparación antes de aceptar el presupuesto, los trabajos se llevarán a cabo lo antes posible y, por su parte, el Cliente deberá aceptar el coste final de la reparación.

GENERAL TERMS

These conditions, together with the eventual specific conditions accorded in the contract, apply to all deliveries and all services. The purchase conditions of the customer, if different from those herein established, will not be part of the contract on having accepted the order.

The contracts are concluded, unless otherwise agreed upon by the Parties in writing, by means of written confirmation of the supplier. The General Conditions and / or Specific Conditions of Purchase of the Buyer, cannot, in no case, cancel or replace these General Conditions of Sale.

The acceptance of our offers implies tacitly the acceptance of all the conditions detailed herein, except the special ones that have the agreement in writing, particularly in the same offer or detailed in our accuse of receipt of order, the only documents that oblige us before the Customer. DICSA has the right of property and the right of intellectual property of samples, budgets, technical documentation and information in material or immaterial form as well as in electronic form; the access of third parties to these documents must be forbidden.

OFFERS AND ORDERS

Except in case of having expressed the opposite, the prices include the merchandise placed in our store, including its loading, but without including the packing nor the transport to the place of receipt, nor taxes, nor the getting started - these will always be at the expense of the customer. All the operations of transport, insurance, handling and delivery are on the account and risk of the Customer.

The offers include only the materials and products expressed in them, available in stock until end of stock, with the term of validity expressed in the same offers.

The studies or offers of material are based on the prices on the date the offer was made, and if, due to changes in the cost of the materials, modification of duties or to any other reason, the level of prices was checked, the prices that would be applied would be those that apply in the date of the delivery, unless the offer is accepted in the term of validity expressed in it.

The prices do not include, unless specific notification, the assembly and the getting started of the supplied materials, the fluids recommended by the technical services of the suppliers, the containers of the materials, as well as the study of the setting up of the different materials. DICSA may change the price, as a consequence of any law that concerns materials, wages, or the working hours, but also as a consequence of probable changes in the parity of the currency since it concerns the elements of import.

The orders will not be taken in consideration unless they are provided with the specific amount in our account, foreseen in our Offer, if this condition has been pre-established. The acceptance of the Offer will suppose equally the acceptance without reserve of these General Conditions of Sale.

STUDIES, TECHNICAL DOCUMENTATION

The information related to the offer, as technical documentation, designs, drawings, catalogues and / or any other technical documentation, is only informative and they have as object to give a general image of the materials described in them, they do not form a part of the contract unless written agreement. DICSA will not accept any type of responsibility for inaccuracy or omission of the above mentioned documentation.

The Customer will always have to do a previous study of compatibility and of assembly of the elements in his installation and will be the only responsible for the putting in conformity of the above mentioned installation with the current regulations. In offers, drawings, schemes and other technical information, we reserve ourselves the right of property and of design, not allowing that these should be facilitated to third parties without our previous written assent.

DICSA retains the property of the supplied merchandise until full payment of the agreed price. DICSA also retains the property of the Product's project, which in no circumstances shall be disclosed or sold to third parties.

THE ASSEMBLIES AT THE LOCATION (PLANT) OF THE CUSTOMER

The offers of the assemblies done for the customer, in his elected location of work, are considered as an estimate (approximate calculation), due to the particular and special characteristics that they can represent, not being able to give place, except final agreement between the parts, to final prices.

REPAIRMENT

The works of repair will not begin until written acceptance, on the part of the Customer, of the offer and of the conditions established in it. Supposing that the offer is not accepted by the Customer within one month, the expenses derived from the disassembly, storage, survey and freightage will be chargeable to the Customer. If the Customer requests the repair before accepting the offer, the assemblies will be carried out as soon as possible and, for his part, the Customer will have to accept the final cost of the repair.

In case of delivery of new products in exchange for the repair, if this one was out of guarantee, the Customer will have to accept the payment corresponding to it. The budgets of repair are always as estimation and should not be considered as final prices.

Condiciones de venta

General conditions of sale

En caso de entregarse productos nuevos a cambio de la reparación, si esta estuviera fuera de garantía el Cliente deberá aceptar el cargo correspondiente a la misma.

Los presupuestos de reparación siempre son orientativos y en ningún caso deben tomarse como precios finales.

PLAZOS DE ENTREGA

DICSA se reserva la facultad de rechazar un pedido en función de la disponibilidad de los productos. En este supuesto, lo comunicara al comprador con la mayor brevedad posible.

El plazo de entrega será acordado por las partes contractuales. Los plazos de entrega se calcularán desde la fecha de recepción de la confirmación del pedido, pudiendo DICSA proceder sin interrupción alguna. DICSA no será responsable de las demoras en el suministro de toda o parte de la mercancía en el caso de fuerza mayor, tal como catástrofes naturales, limitaciones legales, huelgas, etc., o cualquier otra causa fuera de nuestro control. En el caso de darse alguna de las razones anteriormente citadas, el periodo de entrega se hará extensible al mismo período de tiempo que dure la causa que haya motivado el retraso. Sin embargo, si el período excediera de seis meses, DICSA podrá cancelar la parte no enviada notificando previamente por escrito al comprador.

Procuramos con el mayor interés, cumplir los plazos de entrega que se indican en nuestras ofertas o en nuestras confirmaciones de pedido, si bien es materialmente imposible responder plenamente de dicho cumplimiento, por depender de otros proveedores y de inesperadas circunstancias totalmente ajenas a nuestro posible control.

De ahí que no se aceptarán sanciones por demora en la entrega prevista.

DERECHO DE PROPIEDAD

DICSA mantiene la propiedad de la mercancía hasta que el comprador realice el pago por completo de la misma.

Será responsabilidad del comprador tomar las medidas necesarias para conservar en buen estado la mercancía hasta que haya sido pagada, debiendo asegurarse a DICSA el cobro de la misma en caso de haber sido vendida a terceras personas por el comprador.

GARANTÍA

No se responderá de ninguna reclamación que no sea efectuada dentro de los 12 meses siguientes a la entrega de la mercancía, ni se aceptarán devoluciones sin autorización previa o pasados 15 días desde la entrega de la mercancía. En cualquier caso, toda devolución deberá ir acompañada de copia de nuestra autorización y, siempre que no sea por causas imputables a DICSA, conllevará un recargo mínimo del 20 % sobre el coste del material devuelto, corriendo todos los gastos a cargo del cliente.

En relación con los defectos que aparezcan en los productos suministrados, DICSA aceptará como única responsabilidad u obligación, abonar la pieza o piezas defectuosas siempre que la mercancía haya sido tratada adecuadamente y que los defectos surgidos sean debidos a defectos de material o fabricación.

La garantía comprende la reposición o reparación de los elementos defectuosos a realizar en nuestros talleres.

La garantía se entiende siempre con el material presumiblemente defectuoso depositado en nuestras instalaciones, con los gastos de transporte y riesgo a cargo del comprador.

Los consejos y asesoramiento dados antes y post cierre del contrato, se realizan con la mejor intención y según nuestros máximos conocimientos, no obstante DICSA no asume ninguna clase de responsabilidades a este respecto, ni responderá de los eventuales daños directos o indirectos que indistintamente, por quién, dónde y por qué puedan producirse.

DICSA no será responsable de ninguna consecuencia o ningún daño indirecto producido al Comprador o a terceros, incluyendo los daños de pérdida de oportunidades, negocio o ingresos.

DICSA garantiza exclusivamente sus materiales excluyendo cualquier responsabilidad por los efectos o perjuicios que estos puedan provocar en instalaciones, maquinarias o circuitos. En ningún caso se responsabilizará de los accidentes personales o materiales y pérdidas de producción.

Se excluye de la garantía las averías producidas por mal uso o deficiente instalación, averías provocadas por sometimiento de los equipos a esfuerzos anormales con fines experimentales, de ajuste o prueba. La total responsabilidad de DICSA por los daños causados, independientemente del tipo de acción o teoría de la responsabilidad, no excederá del importe de la obra, instalación o materiales que haya sido objeto de pedido a DICSA. Cualquier importe que supere dicha cantidad y que DICSA se vea obligada a soportar ya sea por decisión judicial, arbitral o similar, será repetida a la compradora hasta lograr indemnidad.

Se encuentran excluidos de esta garantía:

- El uso de instalaciones o servicios, que se aparten de los manuales de instrucción o especificaciones de DICSA.
- El uso inadecuado de instalaciones o negligencia del Comprador, sus Ayudantes o Agentes.
- Las partes suministradas por el Comprador.

DELIVERY TERMS

DICSA saves itself the right to reject an order depending on the availability of the products. In this supposition, DICSA will communicate it to the Customer as promptly as possible.

The delivery time has to be approved by the contractual parts. The delivery time will be calculated from the date of receipt of the confirmation of the order, when DICSA will be able to proceed without any interruption. DICSA will not be responsible for the delays in the supply of all or in part of the goods in case of major force, such as natural catastrophes, legal limitations, strikes, etc., or any other reason beyond our control. In case of any of the reasons previously mentioned, the period of delivery will be extensible to the same period of time that lasts the reason that has motivated the delay. Nevertheless, if the period exceeds six months, DICSA may cancel the part that couldn't be sent, by previously notifying the Customer in writing.

We do our best to respect the delivery times that are indicated in our offers or in our order confirmations, though it is materially impossible to answer completely for the above mentioned fulfillment, since we depend on other suppliers and on unexpected circumstances totally foreign to our possible control. Won't be accepted any sanctions for the delay in the foreseen delivery.

RIGHT OF PROPERTY

DICSA maintains the property of the materials (products) until the Customer makes the payment in full of the merchandise.

The Customer is responsible for taking the necessary actions to preserve in good condition the merchandise until it has been paid, must insure DICSA of the payment of the same one in case of having being sold to third persons by the Customer.

WARRANTY

We won't attend any claim done after the 12 months following the delivery of the merchandise. Returned material will not be allowed without previous authorization or when the time between the purchase and the request for return exceeds 15 days.

In any case, all returned merchandise will have to be accompanied by a copy of our authorization and, providing that it is not for reasons attributable to DICSA, will carry a minimal surcharge of 20 % on the cost of the returned material, all the expenses will be charged to the customer. Concerning the faults that appear in the supplied products, DICSA will only accept as unique responsibility or obligation, the paying of the product or defective products providing that the products (merchandise) have been treated adequately and that the arisen faults are due to faults of material or manufacture.

The warranty includes the replacement or repair of the defective elements in our workshops. The warranty is understood always in relation with the presumably defective material deposited in our warehouse, but the costs of transport and the risk being at the expense of the Customer. The advices given before and post closing of the contract, are made with the best intention and according to our know-how, nevertheless DICSA does not assume any category of responsibilities in this regard, nor will answer of the eventual direct or indirect damages that could take place indistinctly, no matter who, where and why they may take place.

DICSA will not be responsible for any consequence or indirect damages occurred to the Customer, and / or third Parties including but not limited to loss of opportunities, business and incomes.

DICSA guarantees exclusively its own materials, excluding any responsibility for the effects or damages that these could provoke in facilities, equipments or conductions. In no case will take responsibility for accidents related to individuals or materials or for losses in fabrication.

The warranty excludes the breakdowns produced by badly use or deficient installation, breakdowns provoked by overloading of the equipments for experimental purposes, either for adjustment or testing. DICSA's total responsibility for the caused damages, independently of the type of action or theory of the responsibility, will not exceed the amount of the work done, installation or materials that have been object of the order to DICSA.

Any amount that exceeds the above mentioned quantity, and any amount that DICSA will have to support either for judicial, arbitral or similar decision, will be transmitted to the Customer until obtaining indemnity.

Will be excluded from this warranty:

- *The use of facilities or services, which are different of those included in the manuals of instruction or in DICSA's specifications.*
- *The inadequate use of facilities or negligence of the Customer, his Assistants or Agents.*
- *The parts supplied by the Customer.*

FREIGHTAGES

By merchandise we always mean the one deposited in DICSA's warehouse, even in operations conditioned by the delivery at destination and the merchandise will always travel at the account and risk of the Customer, being at his charge, including the additional insurances that could be established and the special permissions it may need. According to what it is established in the article 18 of the Royal decree 782/1998 concerning wrapping and packaging mentioned in the 1st additional Disposition (Regulation) of the Law 11/1997, the person responsible for the delivery of the residues of the packaging and worn packages, for the correct environmental management, will be the final user.

Condiciones de venta

General conditions of sale

PORTES

La mercancía se entiende siempre depositada en el domicilio de DICSA, incluso en operaciones condicionadas a la entrega en destino y la mercancía siempre viajará por cuenta y riesgo del comprador, siendo a su cargo inclusive los seguros adicionales que pudieran establecerse y los permisos especiales a que hubiera lugar.

Según se establece en el artículo 18 del Real Decreto 782/1998 para los envases y embalajes acogidos a la Disposición adicional 1.ª de la Ley 11/1997, el responsable de la entrega de los residuos de los embalajes y envases usados, para su correcta gestión ambiental, será el usuario final.

ENVÍOS DE EMERGENCIA

Sea cual fuere el medio de transporte utilizado, avión, courier, régimen de equipajes, agencias especiales, mensajeros etc. Independientemente del importe de dicho servicio, el comprador correrá con todos los gastos extra, los de acarreos, de desplazamientos, y de comunicaciones que el servicio haya ocasionado, sin que en ningún caso este valor pueda ser inferior a 60 euros.

PEDIDOS ESPECIALES

Todo pedido de material especial, conllevará el pago anticipado del 50 % del importe del pedido, como condición indispensable para su aceptación. Dicho importe quedará siempre a favor de DICSA como indemnización en cualquier caso de anulación por parte del comprador, sin perjuicio de las reclamaciones que por Ley se puedan tener derecho.

VENTA MÍNIMA

La facturación mínima será de 50 € sea cual sea el importe del pedido.

PAGOS

Los pagos se realizarán como máximo y salvo acuerdo expreso entre las partes, a 60 días desde la fecha de la factura y previa recepción de los informes positivos de crédito. Si el comprador no efectuare el pago de cualquiera de los suministros a su vencimiento, DICSA está autorizado a suspender los envíos posteriores hasta que se realice dicho pago. Cualquier cargo bancario asociado con el pago de la mercancía, así como los gastos de devolución de efectos en caso de impago, serán por cuenta del comprador.

En caso de demora en el pago y sin perjuicio de otros derechos atribuidos al comprador por la legislación en vigor, el comprador abonará a DICSA un interés de demora del 2 % mensual desde la fecha de vencimiento de la factura.

COBRO DE LETRAS O RECIBOS DEVUELTOS O APLAZADOS

Serán a cargo del librado:

- Gastos de devolución.
- Intereses del 1 % mensual desde el día del vencimiento fallido hasta la fecha de cobro definitivo.
- Posible valor del timbre de nuevos documentos.
- Prima de seguro de crédito.

PAGOS COINCIDENTES EN VACACIONES

Si el cliente no pudiese atender los pagos que coincidiesen con periodos vacacionales, éstos se trasladarán al mismo día del mes anterior. En caso de existir días fijos de pago, el vencimiento se trasladará al día hábil de pago inmediatamente anterior.

USO DE SOFTWARE

En la medida en que el volumen de entrega incluye la puesta a disposición de software, el cliente tiene el derecho no exclusivo a usarla incluyendo la documentación adjunta. Se le cede el software para el uso en el objeto de entrega al cual va destinado. No se admite el uso de este software en otro sistema. La modificación, traducción o adaptación de código de objeto a código de origen así como la reproducción de software solamente se admite en la medida legalmente establecida. El cliente se compromete a no retirar las indicaciones del fabricante, especialmente indicaciones del Copyright sin el consentimiento previo de DICSA. Todos los demás derechos sobre el software y la documentación incluyendo las copias, corresponden a DICSA o al proveedor del software. No se admite la concesión de sublicencias.

DERECHO APLICABLE Y JURISDICCIÓN

Las relaciones jurídicas entre DICSA y el comprador están sujetas al derecho Español. El tribunal competente será el del domicilio de DICSA. Sin embargo, DICSA podrá optar por interponer las acciones legales correspondientes en el domicilio del comprador.

EMERGENCY DELIVERIES

No matter the type of the transportation used: by plane, courier, as baggage (luggage), special agencies, messengers etc; independently of the amount of the above mentioned service, the Customer will pay all the extra expenses, those of transportations, of shipping, and of communications that the service has caused; this value may not, under no circumstance, be lower than 60 euros.

SPECIAL ORDERS

Any order (request) of special material, will carry the anticipated payment of 50 % of the amount of the order (request), as an indispensable condition for its acceptance. The above mentioned amount will always be in favor of DICSA as compensation in case of cancellation on the part of the Customer, without prejudice of the claims at which they may have right by Law.

MINIMAL SALE

The minimal invoice will be of 50 €, no matter the amount of the order.

PAYMENTS

The payments have to be done, except express written agreement between the parts, in maximum 60 days from the date of the invoice and previous receipt of the positive reports of credit. If the Customer doesn't make the payment in time, for a part of the merchandise supplied, DICSA is authorized to suspend the posterior deliveries until the Customer executes the due payments. Any bank charges associated with the payment of the merchandise, as well as the expenses of return of it in case of non-payment, will be at the expense of the Customer. In case of delay in the payment and without prejudice of other rights attributed to the buyer for the legislation in effect, the Customer will pay to DICSA an interest of monthly delay of 2 % starting from the date when the invoice comes to its term.

UNPAID OR POST-PONED INVOICES

Will be at the expense of the Customer:

- *The return expenses.*
- *Monthly interests of 1 %, from the day when the payment has come to its term and wasn't made, until the date of full payment.*
- *Possible amount (value) of the stamp of the new documents.*
- *The credit insurance.*

COINCIDENTAL PAYMENTS IN VACATIONS

If the client could not attend to the payments that were coinciding with vacation periods, these will move to the same day of the previous month. In case there are fixed days of payment, the term of the invoice will move to the immediately previous working day of payment.

THE SOFTWARE USE

If the delivery includes the putting at the disposal of the Customer software, the Customer has the exclusive right to use it, including the attached documentation. The software is sent for the use in the object of delivery to which it is destined. It is forbidden the use of this software into any other system. The modification, translation or adjustment of the code of object to code of origin as well as the reproduction of software is only admitted into the legally established limits. The Customer promises not to withdraw the indications of the manufacturer, especially the indications of the Copyright, without DICSA's previous assent. All the other rights on the software and the documentation including the copies, they belong to DICSA or to the supplier of the software. The concession of sublicenses is not admitted.

GOVERNING LAW AND JURISDICTION

These General Conditions and any agreement between DICSA and the Customer shall be exclusively governed by Spanish laws. The exclusive jurisdiction on any dispute between the DICSA and the Customer shall be the courts of DICSA's domicile. Nevertheless, DICSA has also the right to bring legal action against the Customer before the courts of the place of business and/or residence of the Customer.

Información general

General information

DICSA ESPAÑA
Sede | Head Office

Tel. +34 976 46 10 46
info@dicsaes.com

DICSA ITALIA SRL

Tel. +39 059 820 179
italia@dicsaes.com

DICSA AMERICA

Tel. 786 358 6662
america@dicsaes.com

DICSA DEUTSCHLAND

Tel. 0322 21098096
export@dicsaes.com

DICSA LATAM

Tel. +34 976 464 106
america@dicsaes.com

DICSA ASIA PACIFIC

Tel. +34 976 464 106
asia-pacific@dicsaes.com

DICSA TÜRKIYE

Tel. +90 533 080 67 08
turkiye@dicsaes.com

Atención al cliente | Customer service

Departamento comercial | Commercial department

Nacional | National
Tel. 976 464 108
comercial@dicsaes.com

Internacional | International
Tel. +34 976 464 106
export@dicsaes.com

Gestión de pedidos | Orders management

Nacional | National
Conducciones | Connectors
Tel. 976 464 100
976 464 101
Hidráulica | Components
Tel. 976 464 102
pedidos@dicsaes.com

Internacional | International
Tel. +34 976 464 100
+34 976 464 101
orders@dicsaes.com

Otros servicios | Other services

Dpto. Calidad | Quality Dpt.
Tel. 976 479 545
calidad@dicsaes.com

Dpto. Informática | IT Dpt.
Tel. 976 479 555
informatica@dicsaes.com

Dpto. Producción | Production Dpt.
Tel. 976 479 543
produccion@dicsaes.com

Dpto. Finanzas | Accounting Dpt.
Tel. 976 479 542
finanzas@dicsaes.com

Dpto. Compras | Purchasing Dpt.
Tel. 976 464 107
compras@dicsaes.com

Oficina de almacén | Warehouse Dpt.
Tel. 976 464 101
almacen@dicsaes.com

DICSA

info@dicsaes.com
www.dicsaes.com

DISTRIBUIDORA INTERNACIONAL CARMEN, S.A.U
Polígono Industrial Alcalde Caballero
C/ Virgen del Buen Acuerdo, s/nº. 50014 Zaragoza (Spain)
Tel. +34 976 46 10 46

DICSA ITALIA SRL
Via Emilia Ovest 1179/c
41123 Modena (Italia)
Tel. +39 059 820 179
italia@dicsaes.com

DICSA AMERICA LLC
875 NE 191 STR.
STE 302 Aventura. FL 33180
Tel. 786-358-6662
Skype: america.dicsa
Whatsapp: +34 617548815
america@dicsaes.com

DICSA DEUTSCHLAND
Logististihsentrum GmSH
Thomas Dachser Str. 1 ·
76316 Malsch (Alemania)
Tel. 322 21098 096
export@dicsaes.com

DICSA LATAM
Tel. +34 976 464 106
america@dicsaes.com

DICSA ASIA PACIFIC
Tel. +34 976 464 106
asia-pacific@dicsaes.com

DICSA TÜRKIYE
Tel. 90 533 080 67 08
turkiye@dicsaes.com

2022

ISO 9001
BUREAU VERITAS
Certification