anzeve
Queremos ayudarte

von arx®

Machines
Maschinen
Machines
Macchine

Tools
Werkzeuge
Outils
Utensili

Quality products
Qualitätsprodukte
Produits de qualité
Prodotti di qualità

Customer service
Service
Service clientèle
Servizio clientela

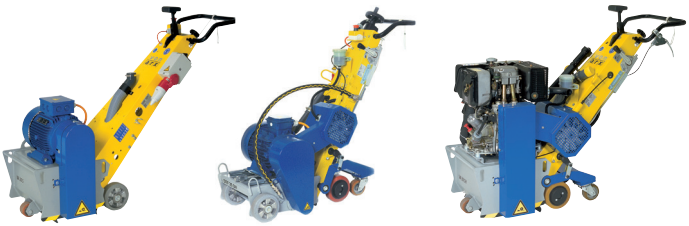

Swiss design
Produced in EU

www.anzeve.com

Quality
Qualität
Qualité
Qualità

Von Arx – The Original.
Safe and dependable.

Innovation for customers.
Advice and service –
distributors,
sales and service centers
around the world.

Customer satisfaction –
your benefit.

Innovation
Innovation
Innovation
Innovazione

Von Arx – Das Original.
Sicher und zuverlässig

Innovation für Kunden.
Beratung und Service –
Vertretungen,
Verkaufs- und
Servicestellen weltweit.

Kundennutzen – Ihr Gewinn

Near you
In Ihrer Nähe
Près de vous
Nella vostra vicinanza

Von Arx – l' Original.
Sécurité et confiance.

Innovations pour clients.
Conseil et service –
distributeurs,
centres de ventes et
service clientèle dans le monde.

Contentement du client –
votre profit.

Von Arx – L' originale.
Sicurezza ed attendibilità.

Innovazioni per la clientela.
Consigli e servizio –
rappresentanti,
centri di vendita e servizio
in tutto il mondo.

Soddisfazione del cliente –
il vostro profitto.

Swiss design
Produced in EU

Surface preparation machines
Flächenbearbeitungsmaschinen
Machines pour la préparation des surfaces
Macchine per trattamento di superfici

Pneumatic tools
Druckluftwerkzeuge
Outils pneumatiques
Utensili pneumatici

Index: ***page / Seite***

VA 10 L	***4 / 5***
FR 200	***6 / 7***
VA 25 S	***8 / 9***
VA 30 S	***10 / 11***
VA 30 SH	***12 / 13***
DTF 25	***14***
NP / MH-Series	***16 / 17***
needle scalers / Nadelpistolen	
chisel hammers / Meisselhämmer	
B-Series	***18 / 19***
needle scalers / Nadelpistolen	
B-Series	***20 / 21***
chisel hammers / Meisselhämmer	
B-Series set / Garnituren	***22***
DK-Series	***23***

Copyright © Von Arx EOOD

standard
drum 701006
set 701027

drum 701007
set 701028

drum 706561
set 701928

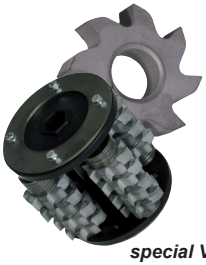

special VHM
drum 707528
set 707529
11mm

drum 701009
set 701031
11mm

drum 701008
set 701030
22mm

nylon brush /
Nylonbürste
700984

steel brush fine /
Stahlbürste fein
700981

steel brush coarse /
Stahlbürste grob
700982

Swiss design
Produced in EU

drum = Trommel / set = Satz

VA 10 L - 2.2 kW
230 V / 50 Hz
702311 - EU
710453 - CH

Copyright © Von Arx EOOD

standard
drum 701422
set 701505

drum 701423
set 701506

drum 706563
set 701930

special VHM
drum 702208
set 701997
11mm

drum 701425
set 701508
11mm

drum 701424
set 701507
22mm

drum 708154
set 709545

nylon brush /
Nylonbürste
2x 700984

steel brush fine /
Stahlbürste fein
2x 700981

steel brush coarse /
Stahlbürste grob
2x 700982

SF - 60
side attachment unit /
Seitenfräser
706294

standard
drum 701094
set 701105

drum 701095
set 701106

drum 706562
set 701955

special VHM - 11mm
drum 707530
set 707531

drum 701097
set 701108
11mm

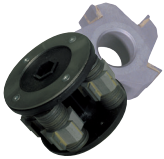

drum 701096
set 701107
22mm

drum = Trommel / set = Satz

Swiss design
Produced in EU

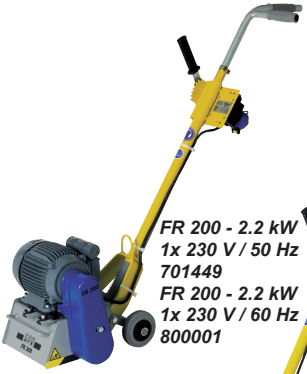

FR 200 - 2.2 kW
1x 230 V / 50 Hz
701449
FR 200 - 2.2 kW
1x 230 V / 60 Hz
800001

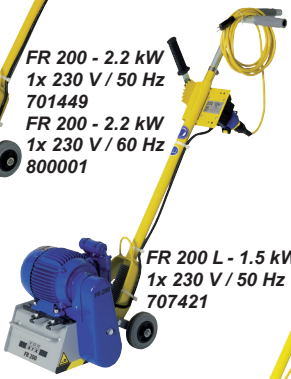

FR 200 L - 1.5 kW
1x 230 V / 50 Hz
707421

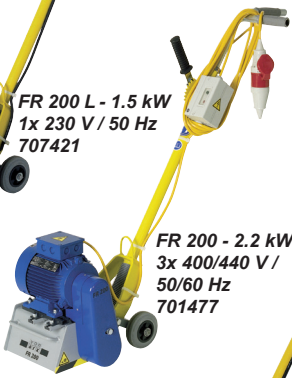

FR 200 - 2.2 kW
3x 400/440 V /
50/60 Hz
701477

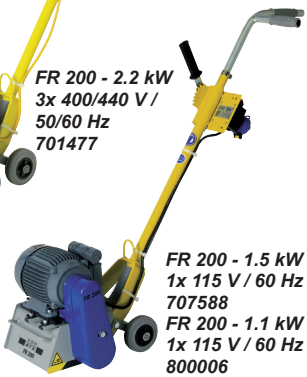

FR 200 - 1.5 kW
1x 115 V / 60 Hz
707588
FR 200 - 1.1 kW
1x 115 V / 60 Hz
800006
FR 200 - 1.1 kW
1x 115 V / 50 Hz
800004

FE - 200
fine adjustment /
Feineinstellung
707387
(standard with / bei
707421)

FR 200 - Honda
Gasoline / Benzin
701436

Copyright © Von Arx EOOD

***medium size cutters* /**
mittelgrosse Lamellen

Standard
drum 706946
set 706306

drum 706948
set 702385

drum 706947
set 702387
19mm

***small size cutters* /**
kleine Lamellen

drum 707191
set 702591

drum 707192
set 702592

drum 707189
set 706692

drum 707194
set 702594
11mm

drum 707193
set 702593
22mm

drum 709546
set 709547

Swiss design
Produced in EU

drum = Trommel / set = Satz

VA 25 S

VA 25 S - 4 kW
3x 230 V
709554

VA 25 S - 4 kW
3x 400 V
706289

VA 25 S - Honda
Gasoline / Benzin
707335

Copyright © Von Arx EOOD

***large size cutters*,**
4 shaft drums /
***grosse Lamellen*,**
4-Wellen-Trommeln

standard
drum 701691
set 701836

drum 701694
set 701839

drum 706566
set 706691

drum 701697
set 701842

drum 701696
set 701841
19mm

drum 701695
set 701840
39mm

***medium size cutters*,**
8 shaft drums /
***mittelgrosse Lamellen*,**
8-Wellen-Trommeln

drum 706475
set 706485

drum 706576
set 701932

drum 706575
set 701931
19mm

Swiss design
Produced in EU

drum = Trommel / set = Satz

VA 30 S - 7.5 kW
3x 400 V / 50 Hz
706267
3x 230 V / 60 Hz
800013
3x 480 V / 60 Hz
800010

VA 30 S - 5.5 kW
Dual 3x 400 V / 3x 230 V
707373

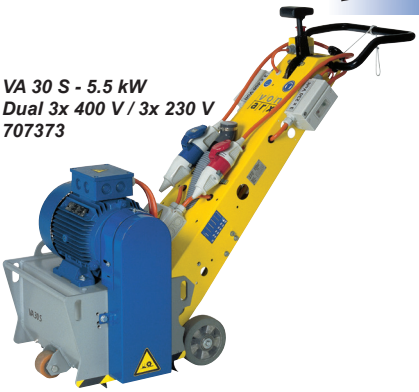

VA 30 S - Honda
Gasoline / Benzin
706275

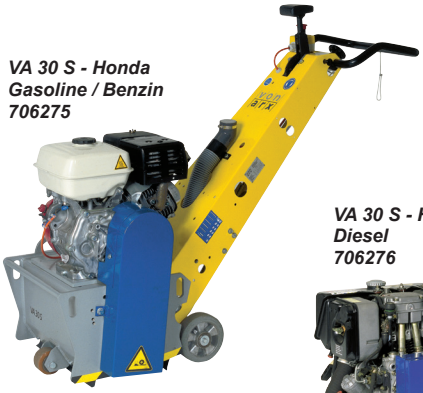

VA 30 S - Hatz
Diesel
706276

Copyright © Von Arx EOOD

***large size cutters*,**
4 shaft drums /
***grosse Lamellen*,**
4-Wellen-Trommeln

standard
drum 701691
set 701836

drum 701694
set 701839

drum 706566
set 706691

drum 701697
set 701842

drum 701696
set 701841
19mm

drum 701695
set 701840
39mm

***medium size cutters*,**
8 shaft drums /
***mittelgrosse Lamellen*,**
8-Wellen-Trommeln

drum 706475
set 706485

drum 706576
set 701932

drum 706575
set 701931
19mm

Swiss design
Produced in EU

drum = Trommel / set = Satz

Von Arx 30 SH
with hydraulic traction /
mit hydraulischem Vorschub

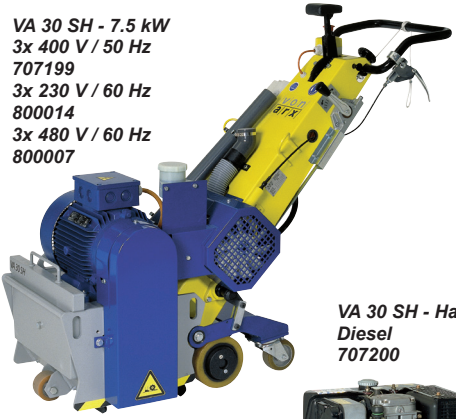

VA 30 SH - 7.5 kW
3x 400 V / 50 Hz
707199
3x 230 V / 60 Hz
800014
3x 480 V / 60 Hz
800007

VA 30 SH - Hatz
Diesel
707200

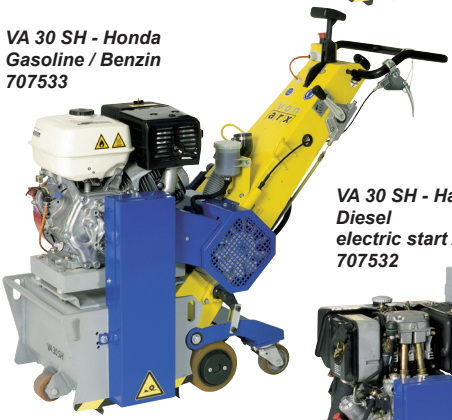

VA 30 SH - Honda
Gasoline / Benzin
707533

VA 30 SH - Hatz
Diesel
electric start / Elektro-Start
707532

Copyright © Von Arx EOOD

Von Arx DTF
working with diamond blades / arbeiten mit Diamantscheiben

DTF 25 SH

DTF 25 SH - 11 kW
3x 400 V / 50 Hz
708697
3x 480 V / 60 Hz
800015
hydraulic traction /
hydraulischer Vorschub
incl. drum /
incl. Trommel

diamond blades turbo/
Diamantscheiben Turbo
drum 707289
set 707326

SF - DTF 25 SH
side attachment unit / Seitenfräser
excl. drum / exkl. Trommel
707534

blades for / Scheiben für SF
drum 707417
set 707410

directional guide /
Zielvorrichtung
701235

Swiss design
Produced in EU

drum = Trommel / set = Satz

Copyright © Von Arx EOOD

set needles compl. for / Nadelsatz kompl. für	2 mm blunt stumpf	3 mm blunt stumpf	3 mm pointed meissel	4 mm blunt stumpf	4 mm pointed meissel
NP 23 NP 23 K	706187	706188	706189	706190	706191
NP 34 NP 34 K	706192	706193	706194	706195	706196

blunt / stumpf

pointed / meissel

24 x 190 mm
700193

40 x 250 mm
700194

290 mm
700196

60 x 300 mm
708582

100 x 280 mm
700205

flat chisel cranked/
Flachmeissel gekröpft
24 x 260mm
700195

carpet removal chisel /
Teppichmesser
210 mm
706867

40 x 520 mm
700207

holder hexagonal /
Stockerhalter 6-kant
700204

3 x 3 - 700199

4 x 4 - 700200

5 x 5 - 700201

7 x 7 - 700202

pitching tools /
Stockereinsätze
35 x 35 mm

holder round /
Stockerhalter rund
700198

vac connector assembly /
Absaugstutzen
NP 23 / 23 K 700602
NP 34 / 34 K 700628
(standard with / bei NP 23 + 34)

front holder for / Handgriff für
NP / MH 23 / 23 K 700081
NP / MH 34 / 34 K 700342
(standard with / bei
NP / MH 23 + 34)

box / Schachtel
(standard with / bei
NP xx K / MH xx K)

case / Koffer
700688
(standard with / bei
NP xx / MH xx)

Swiss design

Produced in EU

NP 23 K
700722

NP 34 K
706598

MH 23 K
706092

needle scalers / Nadelpistolen

NP/MH-Series

low vibration / vibrationsarm

NP 23
700616

NP 34
700639

chisel hammers / Meisselhämmer

MH 23
700738

MH 34
700751

Copyright © Von Arx EOOD

set needles compl. for / Nadelsatz kompl. für	2 mm blunt stumpf	3 mm blunt stumpf	3 mm pointed meissel	4 mm blunt stumpf	4 mm pointed meissel
12 B	700253	700254	700255		
23 B 23 BG	700297	700298	700300	700299	700301
34 B 34 BGV	700349	700350	700352	700351	700353
45 B 45 BGV		700397	700399	700398	700400

blunt / stumpf

pointed / meissel

vac connector assembly
Absaugstutzen
23 B / 23 BG 700280
34 B 700628
(standard with / bei 23 B + 34 B)

front holder for / Handgriff für
23 B 700081
34 B 700342
45 B 700395
(standard with / bei 34 B + 45 B)

for / für
23 B / 23 BG / 34 B

for / für
45 B

chisel holder for / Meisselhalter für
23 B / BG 700294
34 B / BGV 700347
45 B / BGV 700388

case / Koffer
700688
(standard with / bei xx B)

Swiss design
Produced in EU

needle scalers / Nadelpistolen

B-Series

12 B
700263

23 BG
700438

23 B
700312

34 B
700364

45 B
700409

34 BGV
150cm
700462

45 BGV
150cm
706768

Copyright © Von Arx EOOD

40 x 520 mm
700207

flat chisel cranked/
Flachmeissel gekröpft
24 x 260mm
700195

40 x 250 mm
700194

24 x 190 mm
700193

60 x 300 mm
708582

carpet removal chisel /
Teppichmesser
210 mm
706867

290 mm
700196

100 x 280 mm
700205

pitching tools /
Stockereinsätze
35 x 35 mm

3 x 3
700199

4 x 4
700200

5 x 5
700201

7 x 7
700202

holder hexagonal /
Stockerhalter
6-kant
700204

holder round /
Stockerhalter rund
700198

conversion kit needle scaler /
Umbausatz Nadelpistole

23 B / BG	709551
34 B / BGV	709552
45 B / BGV / MHV	709553

front holder for / Handgriff für
23 B 700081
34 B 700342
45 B 700395
(standard with / bei
34 B + 45 B)

case / Koffer
700688
(standard with / bei xx B)

Swiss design
Produced in EU

chisel hammers / Meisselhämmer

B-Series

23 BG
700441

23 B
700314

34 B
700366

MHV 45
130cm
707404

45 BGV
150cm
706766

34 BGV
80cm
709343

34 BGV
150cm
700464

45 B
700411

www.vonarx.com

Copyright © Von Arx EOOD

B-Series Set / Garnituren

23 BG
700445

23 B
700319

34 B
700371

45 B
700415

incl. in B-Series Set / inkl. in B-Serie Garnitur

only in / nur bei
23 B + 34 B

only in / nur bei
34 B + 45 B

for / für
23 B / 23 BG / 34 B

for / für
45 B

Swiss design

Produced in EU

DK 1 H
700763

DK 2 H
700770

DK 3 H
700772

DK-Series

wearing set for /
Verschleissteilset für
DK 1 700769
DK 2 700771
DK 3 700773

DK 7 - air / Luft
700552

wearing set for /
Verschleissteilset für
DK 7 700579

Copyright © Von Arx EOOD

Swiss design

Produced in EU

Note / Notizen / Notes / Nota

Copyright © Von Arx EOOD

Note / Notizen / Notes / Nota

Swiss design

Produced in EU

Note / Notizen / Notes / Nota

Copyright © Von Arx EOOD

worldwide
weltweit
mondial
mondiale

anzeve

Queremos ayudarte

c/ Diego Marín Aguilera, 4
Parque Tecnológico de Leganés
28919 Leganés (Madrid)/Spain

Tel.: +34 91 633 45 53
Fax: +34 91 632 20 49
www.anzeve.com

Swiss design
Produced in EU

www.vonarx.com

799954/07/2020

Copyright © Von Arx AG