bano

"Nothing great in the world has ever been accomplished without passion"

Georg Wilhelm Friedrich Hegel

BANO RECYCLING A HISTORY OF CHALLENGES

As we look back at the beginning of our story, we recall our optimism and pride.

It is a story of an intrepid entrepreneur who started the manufacture of wood-fired heating boilers in the years of the Italian economic miracle: between the end of the Second World War and late 1960s.

It is the story of an entire generation of brave women and men who changed the history of the country: transforming it from a poor, mainly rural nation, into a major industrial power, playing a leading role in the modern society and culture.

The history of our country, the struggles and triumphs of our past are essential sources of inspiration to face the everyday challenges in the eternal pursuit of innovation

INDEX

Metal scrap

Aluminium | 07
Primary shredder PREMAC HYDRO
Secondary shredder MAC-S HYDRO

Iron | 13
Primary crusher RIPPER
Vertical mill MV

Copper | 21
Cables recycling plant
ASR recycling plant
Electric motors recycling plant

Waste & Alternative Fuels

E-Waste | 29

Industrial and Municipal Solid Waste | 37

Hazardous waste | 43

Other and special applications

Plastics | 49

Biomass | 53

Rubber | 57

Paper / Data shredding | 61

Special applications | 65

ALUMINIUM

The best solution to recover aluminium from scrap

During the last ten years **BANO** has developed advanced solutions for aluminum and non-ferrous metal scrap processing. The **extraordinary** Bano primary shredder **PREMAC HYDRO** has revolutionized the way to process aluminum scrap. This revolutionary Hi-torque slow-speed single-shaft system achieves high recovery minimizing the dust creation. This high quality machine ensures high quality end-product highly appreciated and demanded in the smelting and refining industry. The **PREMAC HYDRO** model is successfully used to process a large variety of metal scrap, such as aluminum, copper, brass, light iron.

Available in different sizes ranging from 1.8 to 3.5 meters rotor length, and different power requirements, from 200 to 700 KW. Each machine is tailor-made and individually prepared with customized configuration and components to fit the application and the customer preferences.

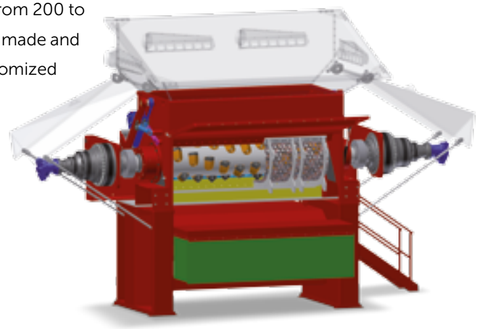

WATCH THE VIDEO

Aluminium scrap recycling plant (Spain)

THE BEST SOLUTION TO RECOVER ALUMINIUM FROM SCRAP

WATCH THE VIDEO

THE BEST SOLUTION TO RECOVER ALUMINIUM FROM SCRAP

Aluminium foundry (Italy)

Among Bano's range of products developed for aluminium and non-ferrous scrap there is the **MAC-S HYDRO** shredder series. This heavy-duty secondary shredder ensures precise cutting while keeping maintenance costs low. With individual configuration and fittings, the **MAC-S HYDRO** can be adjusted optimally for any application. It is successfully used to process light metal scrap, such as UBC, aluminum briquettes, copper wires, brass bullets, turnings. Available in different sizes ranging from 1.6 to 4.8 meters rotor length, and different power requirements, from 132 to 500 KW.

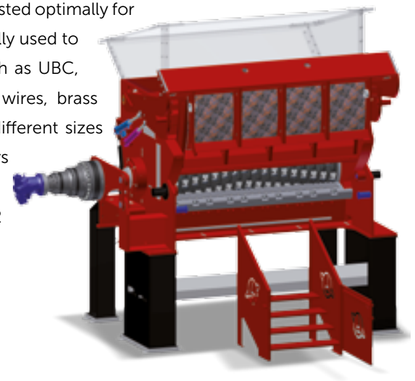

IRON

The new level of throughput and performance in steel shredding

The Bano **PREMAC HYDRO** is the first primary shredder appreciated and requested by the non-ferrous scrap and steel industry. It perfectly fits the small and medium production sites satisfying customers with its versatility and low operational costs. **BANO** expands its range of products introducing the new RIPPER two-shaft crusher to suit the requests of those metal recycling companies looking for higher capacities.

The new RIPPER shredder enters the market becoming a valid and attractive alternative to the existing systems. The Hi-torque slow-speed RIPPER is available with different rotors designs and in stationary or mobile version. The 3 meters interwining shafts are equipped with two-sided transmission and double hydraulic drive.

The new hydraulic RIPPER is particularly suitable for shredding complete car bodies and mixed scrap. The ideal steel recovery plant combines the two-shaft **RIPPER** and the new Bano **VERTICAL MILL** to process a wide variety of materials without compromise between quantity and quality.

WATCH THE VIDEO

THE NEW LEVEL OF THROUGHPUT AND PERFORMANCE

End-of-life vehicles (ELV) recycling plant (Italy)

WATCH THE VIDEO

THE INNOVATIVE SOLUTION TO SATISFY THE NEW DEMANDS OF THE STEEL INDUSTRY

Cooling scrap and metal recovery plant (Italy)

The innovative solution to satisfy the new demands of the steel industry

BANO has recently launched its innovative **VERTICAL MILL** and responds to the increasing demand for innovation in the metal recycling industry.

This new Vertical mill is **the most appropriate solution** to the expressed need for premium quality iron and cooling scrap.

This special system increases the ferrous product density and purity along with the complete liberation of valuable non-ferrous metals achieving optimum recovery levels.

Densification of the final product up to 3.5 t/m3, complying with the highest quality standards of the steel industry.

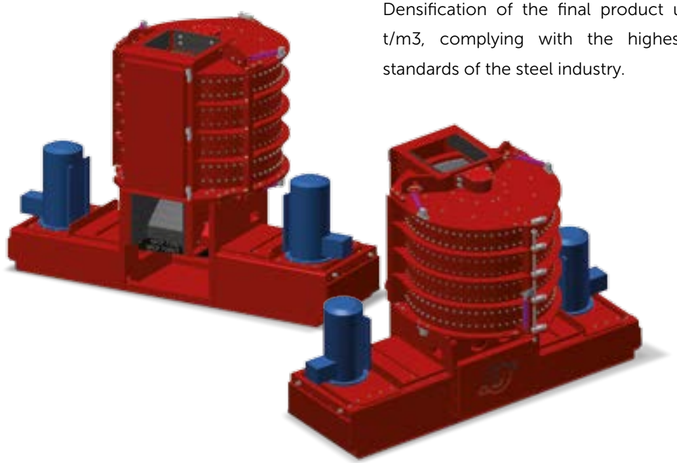

The revolutionary solution to satisfy the new requests of the metal recycling industry

The revolutionary **Bano VERTICAL MILL** surpasses the traditional technology opening new business opportunities for recycling companies. Its tremendous versatility solves old problems and achieves new levels of recovery. This system is especially suitable for processing electric motors, compressors, meatballs, transformers, alternators, armatures, ELV residues, incineration scrap, WEEE, tense aluminum.

BANO has developed a complete range of heavy-duty Vertical mills in order to suit the different customers' needs in terms of applications and throughput.

Available in different sizes ranging from 1.5 to 3 meters rotor diameter, and different power requirements, from 132 to 700 KW.

WATCH THE VIDEO

THE REVOLUTIONARY SOLUTION TO SATISFY THE NEW REQUESTS OF THE METAL RECYCLING INDUSTRY

Metal scrap recovery plant (Italy)

COPPER

A modern technology for an intelligent recycling

During the last ten years **BANO** has been very active in the cable recycling market, expanding its range of solutions from single machines to complete plants. Each plant is a tailor-made system to suit specific customer requirements in terms of production capacities, ranging from 1 to 4 tons/hour, and type of cable: from standard mixed electric cables, telecommunication cables, to polluted cables from ELV residue.

The primary shredder **PREMAC HYDRO** is successfully used to process armored cables, underground submarine cables and ACSR cables with production capacities up to 20 tons/hour. **BANO** has developed a **modern technology,** which surpasses the traditional systems based on high-speed granulators, to ensure maximum recovery keeping operational costs low.

WATCH THE VIDEO

A MODERN TECHNOLOGY FOR AN INTELLIGENT RECYCLING

Multi Function recycling plant (UK)

WATCH THE VIDEO

A MODERN TECHNOLOGY FOR AN INTELLIGENT RECYCLING

Multi Function recycling plant (Holland)

A modern technology for an intelligent recycling

Extraordinary versatility and robustness are the essential characteristics of the **Bano ASR** (Automobile Shredder Residue) recycling system.

Each plant is a tailor-made system to suit specific customer requirements in terms of production capacities, ranging from 1 to 4 tons/hour, and type of residue: from Light Shredder residue with very low metal content to residues from other processing streams, such as WEEE and aluminum processing plants.

Multiples are the **advantages** of this system, including: no granulators involved in the process, high availability levels, lower maintenance and energy costs.

ASR RECYCLING PLANT

The revolutionary solution to satisfy the new requests of the metal recycling industry

The revolutionary **Bano VERTICAL MILL** surpasses the traditional technology opening new business opportunities for recycling companies.

Its tremendous versatility solves old problems and achieves new levels of recovery and processing possibilities. This system is especially suitable for processing electric motors, compressors, meatballs, transformers, alternators, armatures, ELV residues, incineration scrap, WEEE, tense aluminum.

BANO has developed a complete range of heavy-duty Vertical mills in order to suit the different customers' needs in terms of applications and throughput.

Available in different sizes ranging from 1.5 to 3 meters rotor diameter, and different power requirements, from 132 to 700 KW.

WATCH THE VIDEO

Copper meatballs recycling plant (UK)

THE REVOLUTIONARY SOLUTION TO SATISFY THE NEW REQUESTS OF THE METAL RECYCLING INDUSTRY

E-WASTE

New developments on raw materials recovery from e-waste

Bano E-Waste recycling plant is the **excellent result** of the combination of its two breakthrough technologies: the extraordinary single-shaft shredder PREMAC HYDRO and the innovative **VERTICAL MILL**.

Finally a complete and unique solution that ensures high quality end products, maximum recovery and high performances rates.

WATCH THE VIDEO

NEW DEVELOPMENTS ON RAW MATERIALS RECOVERY FROM E-WASTE

WEEE recycling plant (Holland)

WATCH THE VIDEO

NEW DEVELOPMENTS ON RAW MATERIALS RECOVERY FROM E-WASTE

White goods recycling plant (France)

The **new Bano WEEE recycling plant** can process from small domestic appliances to complete white goods (e.g. washing machines).
Each plant is a tailor-made system to suit specific customer requirements in terms of production capacities, ranging from 1 to 15 tons/hour, and type of electrical and electronic waste.

An alternative solution for the sole volume reduction can be the **new Bano two-shaft shredder RIPPER,** which can be supplied in stationary or mobile version and it can ensure high throughput rates. The Hi-torque slow speed **RIPPER** combines perfectly with the **new Bano VERTICAL MILL** to process a wide variety of materials without compromise between quantity and quality. It is another example of the great variety of possible solutions that **BANO** can offer.

WATCH THE VIDEO

E-Waste recycling plant (UK)

INDUSTRIAL AND MUNICIPAL SOLID WASTE

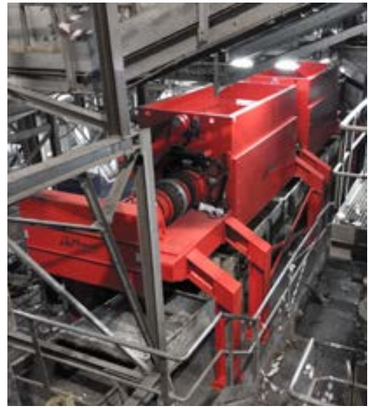

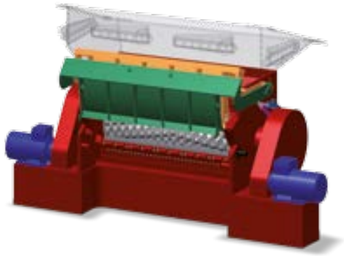

WATCH THE VIDEO

Two secrets for a successful RDF production plant: cost efficiency and high availability

Bano modular construction system for machines allows a wide variety of designs to reach the **best technical solution** for every specific area of application.

Bano **Primary shredders** (PREMAC-S HYDRO series) and secondary shredders (MAC-S and FAST-CUT series), in hydraulic or mechanical version, are highly requested in domestic and industrial waste treatment plants to obtain RDF with high calorific value.

During the **last fifteen years** BANO has proved that its primary and secondary single-shaft shredders are the most reliable and cost efficient in the waste recycling industry. This is the reason why more and more companies require them for revamping and upgrading their existing plants.

In the same way, Bano systems have been selected by important groups to ensure processing stability in the their new lines.

RDF production plant
from domestic waste (Italy)

COST EFFICIENCY AND HIGH AVAILABILITY

WATCH THE VIDEO

MAC-S 48-90: THE LARGEST SECONDARY SHREDDER IN THE WORLD

RDF production plant from Industrial waste (France)

The **primary shredder PREMAC-S HYDRO** is available in different sizes, ranging from 1.8 to 3.5 meters rotor length, and different power requirements, from 200 to 500 KW. The secondary shredders MAC-S and FAST-CUT are available in different sizes, ranging from 1.8 to 4.8 meters rotor length, and different power requirements, from 160 to 700 KW. Bano single-shaft shredders are suitable also for processing bulky waste, carpets, mattresses, fishing nets and ropes.

HAZARDOUS WASTE

Shredding hazardous wastes entails further **difficulties and risks,** but it is in this special area where once again Bano systems confirm their primacy.

BANO single-shaft shredders are able to handle efficiently: metal or plastic drums and IBC with paint and sludge, wooden train sleepers and telephonic poles, medical waste, ammunition.

WATCH THE VIDEO

RDF production plant from Hazardous waste (France)

CAUTION HAZARDOUS WASTE

WATCH THE VIDEO

CAUTION HAZARDOUS WASTE

RDF production plant from Hazardous waste (France)

Wood debris from construction and contaminated wood scrap is an **incredible source of alternative fuel** that can be used to produce thermal energy and electricity.

These contaminated wastes often contain extraneous parts and metals. It is important to configure and design the specific solution for each customer and its material.

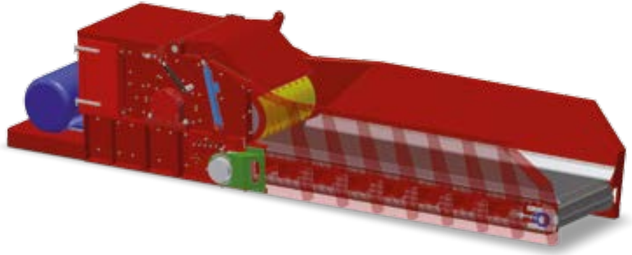

PLASTIC

Plastics: too precious to waste

During the last twenty years **BANO** has developed a complete range of machines with specific technical configurations for processing plastic materials, such as: film and foil, hard plastics, purges, pipes, raffia, big-bags and fibers. **BANO** has recently expanded its range of products with its **new mobile single-shaft shredder MAC-S HYDRO** to respond to the growing demand for mobile solutions in the plastics recycling industry. Extensive quantity of possible variations are available to meet even the most difficult application (e.g. PP fishing nets and PP twines).

WATCH THE VIDEO

PLASTICS: TOO PRECIOUS TO WASTE

Plastics recycling plant (Holland)

BIOMASS

Shredding biomass requires a focus on high throughput, low cost, and low maintenance. **BANO** has experience in shredding palm waste, coconut husk, banana trees, fruit bunch, green waste. Bano mobile solutions are **highly requested** from the small communities and island based waste management and recycling centers. Easily replaceable screens ensure homogeneous end product reduced to the desired size in one step shredding (e.g. 30mm).

WATCH THE VIDEO

Biomass recovery plant (Poland)

SHREDDING BIOMASS

RUBBER

Bano secondary shredders have been always **greatly appreciated** in the tyre recycling industry. They are used for refining in rubber granulating plants and TDF (Tyre Derived Fuel) production.

BANO has recently expanded its range of machines introducing a **new dual-shaft shredder** for size reduction and primary shredding of truck, car and motorcycle tyres. This machine is available in different size and in stationary or mobile version.

Bano new Steel cleaning system has achieved a resounding success in the purity of steel and rubber recovery.

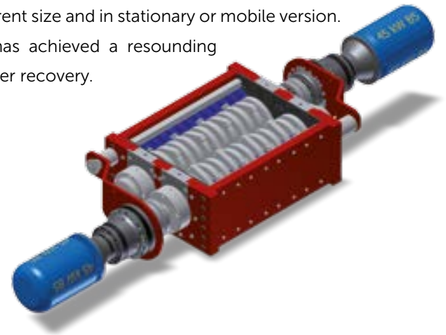

WATCH THE VIDEO

Mobile dual-shaft shredder (Sweden)

PAPER / DATA SHREDDING

Bano shredding machines also reduce paper waste of all kinds (such as paper rolls, cardboard and roll cores) to the **granulate size required.** Document destruction systems are prepared and supplied following a tailor-made concept in order to meet the specific secure levels requirements.

BANO has **experience** also in the cleaning and recovery of steel wire from pulper tail and preparing the residual waste to be used **as alternative fuel.**

WATCH THE VIDEO

Confidential documents destruction plant (Spain)

SPECIAL APPLICATIONS

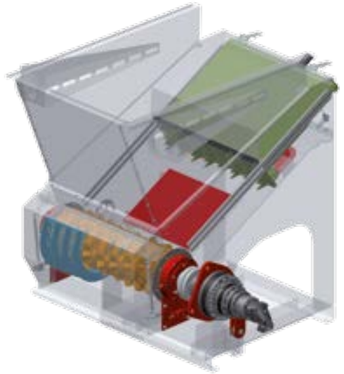

Special application? Bano develops the solution with you

Starting from its proven and mature technologies, **BANO** constantly strive to explore new avenues and find solutions for every customer-specific requirements. For that purpose, BANO opened a new technical test center to analyze and run test with any kind of new material.

The constant pursuit of providing solutions to market demands is one of **BANO's priorities.** This is why BANO is open to find new configurations and designs and even to develop completely new systems.

WATCH THE VIDEO

Sandwich panels recycling plant (Italy)

A NEW ERA HAS STARTED: BANO MULTI FUNCTIONAL RECYCLING PLANTS

Multi Function recycling plant (Italy)

BANO present its **new Multi Function** plant to recover valuable raw materials from complicated scrap materials or complex products coming from other waste streams. Each plant is custom designed following a **modular plant concept** that allows to fulfill any recycling requirements. Among the possible applications: steel from tyres, stainless turnings, aluminum caps, aerosols.

WATCH THE VIDEO

BANO RECYCLING TEST CENTER

Bano opens the biggest Recycling Test Center in Italy

Bano has opened a new **Recycling Test Center** at its headquarters, which allows customers to test their own materials and determine which combination of machinery is the best fit for their processing needs.
The new recycling hub has been designed and equipped with **Bano's full range of products,** including its slow-speed hi-torque single-shaft shredder, the new vertical mill, metal sorting, screening and conveying equipment.

The **new test center** can handle bulk samples of any material from coarse to fine, even in large quantities. Alternative solutions or innovative processing flows can be developed and explored during the tests together with customers.
This major investment proves once again the endless research of **innovative solutions** which together with customization are the essence of this successful company.

Success is a team sport. It requires dedication,
inspiration, and passion.
Thanks to all the people who made possible achieving
multiple goals during the last 30 years.

The book #1
First edition
Printed in Italy, May 2016

Managing editor: Laura Minotto

*Any reproduction, representation or modification,
in full or partly, is expressly prohibited.*

via Marcello, 24
35011 Campodarsego
Padova - Italy
tel. +39 049 9200757
fax +39 049 9200172
info@banoeco.com

shredder-bano.com