LITEON®
OPTOELECTRONICS

SHORT FORM 2009

Delivering **light** to the world of Information

As one of the world's leading producers of optoelectronics, Lite-On Opto has sustained stable growth since it was founded in Taiwan in 1975. The key to our success is to monitor the market trends closely and develop products ahead of our competition. Most importantly, we delight our customers with expedient, reliable services around the globe.

As one of the worldwide major suppliers of opto devices supplies, Lite-On Opto is forging ahead with new product development. We are developing visible opto products such as ultra-bright LEDs for outdoor applications, full color displays, and a variety of surface mount LED devices. For products outside the visible range, we offer infrared emitters, detectors, photo-interrupters, and photocouplers. To find out more about the optoelectronic solutions we offer, see the Optoelectronic product section of this book, or you can visit our Website for more updated information at www.liteon.com

Table of Contents

003 Alphanumerical Index

012 Application Showcase

021 Quality & Reliability

Product

022 SMD LED
- Side View PLCC LED
- Top View PLCC LED
- Top View Chip LED
- Side View Chip LED
- Reverse Mount
- Dom Lens
- Inner Lens
- Dual Colors Top View Chip LED
- Dual Colors Reverse Mount Chip LED
- Dual Colors Side View Chip LED
- Full Colors Top View Chip LED
- Full Colors Side View Chip LED
- Application Notes

049 High Power LED
- 1W / 3W / 5W Emitter (P01 Series)
- 1W / 3W / 5W COB (C02 Series)
- 0.5W Power LED (P00 Series)
- Power Flash LED (C01 Series)
- Application Notes

059 Through Hole LED
- High Brightness LED
- Piraha LED
- Application Notes

071 LED Display
- Single Digit Numeric LED Display
- Dual Digits Numeric LED Display
- Three Digits Numeric LED Display
- Four Digits Numeric LED Display
- Alphanumeric LED Display
- Dot Matrix LED Display
- Graphic LED Display
- Driver IC Built-In LED Display
- SMD LED Lamp on Board Dot Matrix Display
- Bar Graph Arrays LED Display
- SMD LED Display
- Application Notes

139 Light Module
- LCD Backlight Module
- Light Module
- LGP
- LGF
- Application Notes

146 IrDA
- Standard power SIR 115Kb/s Infrared Transceiver
- Low Power SIR 115Kb/s Infrared Transceiver
- Standard and Low Power FIR 4Mb/s Infrared Transceiver
- SIR 115kb/s Infrared + Remote Control Transceiver
- FIR 4Mb/s Infrared + Remote Control Transceiver
- SIR Interface ICs
- FIR/VFIR Controller ICs
- SMD Infrared Emitter
- Subminiature SMT / Thru-Hole Package Infrared Emitter
- 940nm Thru-Hole Package Infrared Emitter
- 875 and 870nm Thru-Hole Infrared Emitter
- Photodiode Infrared Detector
- Phototransistor Infrared Detector
- Application Notes

164 Ambient Light Photo Sensor
- Ambient Light Photo Sensor
- Application Notes

168 PTIR (Through Hole & SMD)
- Top View Infrared Emitting Diode
- Side Look Infrared Emitting Diode
- SMD Infrared Emitting Diode
- Piranha Infrared Emitting Diode
- Phototransistors
- Photodiodes
- SMD IR
- SMD PTR
- SMD PTD
- Application Notes

190 Encoder
- D11 Series
- D21 Series
- DB1 Series
- DC1 Series
- D71 Series

194 Photo Link
- Photolink Module
- Photolink Transmitter Component
- Photolink Receiver Component

202 Photointerrupter
- Transmissive (Slotted Type)
- Actuator (Transmissive Type with Flag)
- Reflective Type

212 Photocoupler
- 4-Pin Mini Flat Photocoupler
- 4-Pin / 6-Pin / 8-Pin / 16-Pin DIP Photocoupler

223 BIN Table

225 Distributor and Representatives in The World

240 Worldwide Contact

Alphanumeric Index

4N25 217
4N26 217
4N27 217
4N28 217
4N35 217
4N37 217
6N135 220
6N136 220
6N137 221
6N138 221
6N139 221
ASDL-3007 150
ASDL-3023 151
ASDL-4262 155
ASDL-4263 155
ASDL-4360 152
ASDL-4560 153
ASDL-4561 153
ASDL-4670 155
ASDL-4671 156
ASDL-4770 156
ASDL-4772 156
ASDL-4860 153
ASDL-5270 157
ASDL-5770 158
ASDL-5771 158
ASDL-5772 158
ASDL-5880 159
ASDL-6270 160
ASDL-6620 160
ASDL-6770 161
ASDL-6771 161
ASDL-7021 152
CNY17-1 217
CNY17-2 217
CNY17-3 217
CNY17-4 217
CNY17F-1 218
CNY17F-2 218
CNY17F-3 218
CNY17F-4 218
HSDL-3000 147
HSDL-3020 151
HSDL-3021 150
HSDL-3201 148
HSDL-3208 149
HSDL-3209 149
HSDL-3220 149
HSDL-3602 148
HSDL-3612 147
HSDL-4220 157
HSDL-4230 157
HSDL-4250 157
HSDL-4251 157
HSDL-4260 157
HSDL-4261 157
HSDL-4270 155
HSDL-4271 155
HSDL-4400 154
HSDL-4420 154
HSDL-5400 159
HSDL-5420 159
HSDL-7002 152
LTA-1000KD 135
LTA-1000KF 135
LTA-1000KG 135
LTA-1000KR 135
LTA-1000KS 135
LTB-A0180X 141
LTB-K0F0X 143
LTB-L46001 142
LTB-L46002 142
LTB-L46003 142
LTB-N0840X 140
LTB-N1040X 140
LTB-N1210X 140
LTB-N1330X 140
LTC-2621CB 092
LTC-2621JD 092
LTC-2621JG 092
LTC-2621JR 092
LTC-2621KF 092
LTC-2621KS 092
LTC-2623CB 097
LTC-2623JD 097
LTC-2623JF 097
LTC-2623JG 097
LTC-2623JR 097
LTC-2623JS 097
LTC-2721CB 092
LTC-2721JD 092
LTC-2721JG 092
LTC-2721KF 092
LTC-2721KR 092
LTC-2721KS 092
LTC-2723CB 097
LTC-2723JD 097
LTC-2723JF 097
LTC-2723JG 097
LTC-2723JS 097
LTC-2723R 097
LTC-3710JG 096
LTC-3710KD 096
LTC-3718JG 096
LTC-3718KD 096
LTC-4624CB 093
LTC-4624JD 093
LTC-4624JG 093
LTC-4624JR 093
LTC-4624KF 093
LTC-4624KS 093
LTC-4627CB 098
LTC-4627JD 098
LTC-4627JF 098
LTC-4627JG 098
LTC-4627JR 098
LTC-4627JS 098
LTC-4724CB 093
LTC-4724JD 093
LTC-4724JG 093
LTC-4724KF 093
LTC-4724KR 093

Alphanumeric Index

LTC-4724KS 093
LTC-4727CB 098
LTC-4727JD 098
LTC-4727JF 098
LTC-4727JG 098
LTC-4727JR 098
LTC-4727JS 098
LTC-5336CB 094
LTC-5336JD 094
LTC-5336JG 094
LTC-5336KF 094
LTC-5336KR 094
LTC-5336KS 094
LTC-5337CB 099
LTC-5337JD 099
LTC-5337JG 099
LTC-5337KF 099
LTC-5337KR 099
LTC-5337KS 099
LTC-561CB 095
LTC-561JD 095
LTC-561JG 095
LTC-561KF 095
LTC-561KR 095
LTC-561KS 095
LTC-5623CB 100
LTC-5623JD 100
LTC-5623JG 100
LTC-5623KF 100
LTC-5623KR 100
LTC-5623KS 100
LTC-5653CB 101
LTC-5653JD-01 101
LTC-5653JF-01 101
LTC-5653JG-01 101
LTC-5653JR-01 101
LTC-5653JS-01 101
LTC-571CB 095
LTC-571JD 095
LTC-571JG 095
LTC-571KF 095
LTC-571KR 095
LTC-571KS 095
LTC-5723CB 100
LTC-5723JD 100
LTC-5723JG 100
LTC-5723KF 100
LTC-5723KR 100
LTC-5723KS 100
LTC-5753CB 101
LTC-5753JD-01 101
LTC-5753JF-01 101
LTC-5753JG-01 101
LTC-5753JR-01 101
LTC-5753JS-01 101
LTC-5836CB 094
LTC-5836JD 094
LTC-5836JG 094
LTC-5836KF 094
LTC-5836KR 094
LTC-5836KS 094
LTC-5837CB 099
LTC-5837JD 099
LTC-5837JG 099
LTC-5837KF 099
LTC-5837KR 099
LTC-5837KS 099
LTD-2601CB 085
LTD-2601JD 085
LTD-2601JG 085
LTD-2601KF 085
LTD-2601KR 085
LTD-2601KS 085
LTD-2701CB 085
LTD-2701JD 085
LTD-2701JG 085
LTD-2701KF 085
LTD-2701KR 085
LTD-2701KS 085
LTD-322CB 086
LTD-322JD 086
LTD-322JG 086
LTD-322JR 086
LTD-322JS 086
LTD-322KF 086
LTD-323CB 086
LTD-323JD 086
LTD-323JG 086
LTD-323JR 086
LTD-323JS 086
LTD-323KF 086
LTD-4608CB 087
LTD-4608JD 087
LTD-4608JG 087
LTD-4608JR 087
LTD-4608JS 087
LTD-4608KF 087
LTD-4708CB 087
LTD-4708JD 087
LTD-4708JG 087
LTD-4708JR 087
LTD-4708KF 087
LTD-4708KS 087
LTD-5021AJD 089
LTD-5023AJD 089
LTD-5250CB 088
LTD-5250JD 088
LTD-5250JG 088
LTD-5250JR 088
LTD-5250KF 088
LTD-5250KS 088
LTD-5260CB 088
LTD-5260JD 088
LTD-5260JG 088
LTD-5260JR 088
LTD-5260KF 088
LTD-5260KS 088
LTD-5521ACB 089
LTD-5521AJR 089
LTD-5523ACB 089
LTD-5523AJR 089
LTD-5621AJG 089

Alphanumeric Index

LTD-5623AJG 089
LTD-5721AJS 089
LTD-5721AKF 089
LTD-5723AJS 089
LTD-5723AKF 089
LTD-6430JG 091
LTD-6450JG 091
LTD-6630KF 091
LTD-6650KF 091
LTD-6710CB 090
LTD-6710JD 090
LTD-6710JG 090
LTD-6710KF 090
LTD-6710KR 090
LTD-6710KS 090
LTD-6730JD 091
LTD-6730KR 091
LTD-6740CB 090
LTD-6740JD 090
LTD-6740JG 090
LTD-6740KF 090
LTD-6740KR 090
LTD-6740KS 090
LTD-6750JD 091
LTD-6750KR 091
LTD-6830KS 091
LTD-6850KS 091
LTDL-RA12A 200
LTDL-RA12B 200
LTDL-RA16A 200
LTDL-RA16A-T 200
LTDL-RX16P01B 197
LTDL-RX16P02 197
LTDL-RX16P03 198
LTDL-RX16S01B 196
LTDL-RX16S05 196
LTDL-TA12A 199
LTDL-TA12B 199
LTDL-TA16A 199
LTDL-TA16A-T 199
LTDL-TA50A 199
LTDL-TX12P01B 197
LTDL-TX12P02 197
LTDL-TX12P03 198
LTDL-TX12P05 198
LTDL-TX12S01B 196
LTDL-TX12S05 196
LTDL-TX16P05 198
LTE-1650 172
LTE-1653 173
LTE-1653K 173
LTE-2871 170
LTE-2872U 170
LTE-302-M 174
LTE-306 174
LTE-309 174
LTE-3226 172
LTE-3271B 169
LTE-3271BL 169
LTE-3276 172
LTE-3279K 169
LTE-3376 171
LTE-3677 171
LTE-4206 173
LTE-4206C 173
LTE-4209 173
LTE-4238 171
LTE-4238C 171
LTE-5208A 169
LTE-5208AC 169
LTE-5238A 170
LTE-5238AC 170
LTE-7377LM1-TA 175
LTE-916A15 175
LTE-916A25 175
LTE-919A40 175
LTE-919A50 175
LTE-C1501 181
LTE-C1506 181
LTE-C1901 182
LTE-C1906 182
LTE-C9301 182
LTE-C9306 182
LTE-S0086 182
LTG-0122M 125
LTG-0422G-S2 126
LTG-Y2K31M 124
LTH-1550-06 211
LTH-1550-09 210
LTH-1650-01 210
LTH-209-01 211
LTH-301-05 205
LTH-301-07 205
LTH-301-19 204
LTH-301-23 203
LTH-301-25W4 210
LTH-301-27P1 203
LTH-301-32 206
LTH-301A 203
LTH-306-02 207
LTH-306-03W47 209
LTH-306-04 205
LTH-306-06W1 209
LTH-306-09P1 208
LTH-306-10 204
LTH-306-11 206
LTH-306-35 207
LTH-306-41P1 206
LTH-306-49 208
LTH-306-53P1 204
LTH-306-64 207
LTL1BECBYJ4 063
LTL1BEKVJNN 063
LTL1BEUBFJ 063
LTL1CHKFKNN 060
LTL1CHKGKNN 060
LTL1CHKRKNN 060
LTL1CHKSKNN 060
LTL1CHTBK5 060
LTL1CHTGK5 060
LTL1KH6FK 060
LTL1KH6YT 060

Alphanumeric Index

LTL1KHCE 060
LTL1KHTBK5 060
LTL1KHTGT6 060
LTL1KH6GD 060
LTL2F3WFK 062
LTL2H3KGKNN 062
LTL2H3SEK 062
LTL2H3SYK 062
LTL2H3VFKNT 062
LTL2P3TBK5 062
LTL2P3TGK 062
LTL2R3KGKNN 062
LTL2R3SEK 062
LTL2R3SYK 062
LTL2R3VFKNT 062
LTL2T3TBK5 062
LTL2T3TGK6 062
LTL2V3TCK7 062
LTL30E4VJ 063
LTL30ECBKRJ 063
LTL30ECBYJ 063
LTL3H3BSDS 064
LTL3H3CBS5 064
LTL3H3CGS7 064
LTL3H3TBDS 064
LTL3H3TGDS 064
LTL3H3TRDS 064
LTL42NKFKNN 061
LTL42NKGKNN 061
LTL42NKRKNN 061
LTL42NKSKNN 061
LTL42TB6N 061
LTL42TG6N 061
LTL4HMSRS 064
LTL4HMYSDS 064
LTL4HMYSJS 064
LTL4VMSRS 065
LTL4VMSSS 065
LTL5H3BSDS 065
LTL5H3CBS5 065
LTL5H3CGDS7 065
LTL5H3TBDS 065
LTL5H3TGDS 065
LTL5H3TRDS 065
LTL5L3BSDS 061
LTL5L3CBDS5 061
LTL5L3CGDS7 061
LTL5L3UEDS 061
LTL911CBKS5 066
LTL911CGKS7 066
LTL911SEKSA 066
LTL911SYKSA 066
LTL912CBKS5 066
LTL912CGKS7 066
LTL912S13HKS 066
LTL912SEKSA 066
LTL912SYKSA 066
LTL917SEKS 066
LTL917SHKS 066
LTL917SYKS 066
LTM-0124M-01 134
LTM-0304M-01 132
LTM-0305M-01 131
LTM-8328GKR-04 127
LTM-8328PKR-04 127
LTM-8522JG 133
LTM-8522KD 133
LTM-8522KF 133
LTM-8522KR 133
LTM-8522KS 133
LTM-8529JG 129
LTM-8529KD 129
LTM-8529KF 129
LTM-8529KR 129
LTM-8529KS 129
LTM-8530JG 130
LTM-8530KD 130
LTM-8530KF 130
LTM-8530KR 130
LTM-8530KS 130
LTM-8647AJG 128
LTM-8647AKD 128
LTM-8647AKF 128
LTM-8647AKR 128
LTM-8647AKS 128
LTOE-15D11 191
LTOE-15D21 191
LTOE-15D71 193
LTOE-15DB1 192
LTOE-30D71 193
LTOE-30DC1 192
LTP-12188M-07 120
LTP-1257AKM 111
LTP-1357AKM 111
LTP-14058AKD 113
LTP-14058AKF 113
LTP-14058AKG 113
LTP-14058AKR 113
LTP-14058AKS 113
LTP-14088KM-05 121
LTP-14158AKD 113
LTP-14158AKF 113
LTP-14158AKG 113
LTP-14158AKR 113
LTP-14158AKS 113
LTP-1457KD 108
LTP-1457KF 108
LTP-1457KG 108
LTP-1457KR 108
LTP-1457KS 108
LTP-14858KM 115
LTP-14958KM 115
LTP-1557KD 108
LTP-1557KF 108
LTP-1557KG 108
LTP-1557KR 108
LTP-1557KS 108
LTP-18088KD 118
LTP-18088KF 118
LTP-18088KG 118
LTP-18088KR 118
LTP-18088KS 118

Alphanumeric Index

LTP-18188M-01 121
LTP-2057AKA 107
LTP-2057AKR 107
LTP-2057AKY 107
LTP-2058AKD 114
LTP-2058AKF 114
LTP-2058AKG 114
LTP-2058AKR 114
LTP-2058AKS 114
LTP-2088KD 119
LTP-2088KF 119
LTP-2088KG 119
LTP-2088KR 119
LTP-2088KS 119
LTP-2157AKA 107
LTP-2157AKR 107
LTP-2157AKY 107
LTP-2158AKD 114
LTP-2158AKF 114
LTP-2158AKG 114
LTP-2158AKR 114
LTP-2158AKS 114
LTP-2188AKM 122
LTP-2458AKM 116
LTP-2558AKM 116
LTP-257FFKM-01 123
LTP-2657AKM 112
LTP-2757AKM 112
LTP-2C44F-01 106
LTP-2C44F-01 106
LTP-2C44F-01 106
LTP-3362JD 102
LTP-3362JF 102
LTP-3362JG 102
LTP-3362JR 102
LTP-3362JS 102
LTP-3784JD-01 105
LTP-3784JG-01 105
LTP-3784KF-01 105
LTP-3784KR-01 105
LTP-3784KS-01 105
LTP-3786JD-01 105
LTP-3786JG-01 105
LTP-3786KF-01 105
LTP-3786KR-01 105
LTP-3786KS-01 105
LTP-3862JD 102
LTP-3862JF 102
LTP-3862JG 102
LTP-3862JR 102
LTP-3862JS 102
LTP-4323JD 103
LTP-4323JG 103
LTP-4323KF 103
LTP-4323KR 103
LTP-4323KS 103
LTP-4823JD 103
LTP-4823JG 103
LTP-4823KF 103
LTP-4823KR 103
LTP-4823KS 103
LTP-537JD 104
LTP-537JG 104
LTP-537KF 104
LTP-537KR 104
LTP-537KS 104
LTP-587JD 104
LTP-587JG 104
LTP-587KF 104
LTP-587KR 104
LTP-587KS 104
LTP-7057KM 110
LTP-7157KM 110
LTP-7188KD 117
LTP-7188KF 117
LTP-7188KG 117
LTP-7188KR 117
LTP-7188KS 117
LTP-7388M-01 120
LTP-747KD 109
LTP-747KF 109
LTP-747KG 109
LTP-747KR 109
LTP-747KS 109
LTP-757KD 109
LTP-757KF 109
LTP-757KG 109
LTP-757KR 109
LTP-757KS 109
LTPL-C011W 053
LTPL-C013W 053
LTPL-C014W 053
LTPL-C021A 051
LTPL-C021B 051
LTPL-C021C 051
LTPL-C021G 051
LTPL-C021H 051
LTPL-C021MS 051
LTPL-C021NS 051
LTPL-C021R 051
LTPL-C021WSS0 051
LTPL-C021WST1 051
LTPL-C023MSS0 051
LTPL-C023NSS0 051
LTPL-C023NST1 051
LTPL-C023NST2 051
LTPL-C023WST1 051
LTPL-C023WST2 051
LTPL-C023WSU1 051
LTPL-C023WSU2 051
LTPL-C024MSS0 051
LTPL-C024NST1 051
LTPL-C024NST2 051
LTPL-C024WST2 051
LTPL-C024WSU1 051
LTPL-C024WSU2 051
LTPL-P00DMS 052
LTPL-P00DNS 052
LTPL-P00DWS 052
LTPL-P00SMS 052
LTPL-P00SNS 052
LTPL-P00SVS 052

Alphanumeric Index

LTPL-P00SWS....052
LTPL-P011A....050
LTPL-P011B....050
LTPL-P011C....050
LTPL-P011G....050
LTPL-P011H....050
LTPL-P011MS....050
LTPL-P011NS....050
LTPL-P011R....050
LTPL-P011WSS0....050
LTPL-P011WST1....050
LTPL-P013MSS0....050
LTPL-P013NSS0....050
LTPL-P013NST1....050
LTPL-P013NST2....050
LTPL-P013WST1....050
LTPL-P013WST2....050
LTPL-P013WSU1....050
LTPL-P013WSU2....050
LTPL-P014MSS0....050
LTPL-P014NST1....050
LTPL-P014NST2....050
LTPL-P014WST2....050
LTPL-P014WSU1....050
LTPL-P014WSU2....050
LTR-10DIDR....180
LTR-195ALS-21....165
LTR-230ALS-21....165
LTR-301....177
LTR-306....177
LTR-309....178
LTR-3208....176
LTR-3208E....176
LTR-323D....179
LTR-323DB....179
LTR-4206....176
LTR-4206E....177
LTR-516AB....180
LTR-516AD....180
LTR-546AB....181
LTR-546AD....181
LTR-5579DP1....178
LTR-5986D....178
LTR-5986H....179
LTR-733DBM1-TA....181
LTR-763DK-P1....180
LTR-C1503B....183
LTR-C1903B....183
LTR-C9303B....183
LTR-C930DB....184
LTR-S3203B....184
LTR-S320C....184
LTS-2301ACB....072
LTS-2301AJD....072
LTS-2301AJG....072
LTS-2301AJR....072
LTS-2301AKF....072
LTS-2301AKS....072
LTS-23305JG....083
LTS-23305KD....083
LTS-23305KF....083
LTS-23305KR....083
LTS-23305KS....083
LTS-23805JG....083
LTS-23805KD....083
LTS-23805KF....083
LTS-23805KR....083
LTS-23805KS....083
LTS-2801ACB....072
LTS-2801AJD....072
LTS-2801AJG....072
LTS-2801AJR....072
LTS-2801AKF....072
LTS-2801AKS....072
LTS-3361CB....073
LTS-3361JD....073
LTS-3361JG....073
LTS-3361JR....073
LTS-3361JS....073
LTS-3361KF....073
LTS-3367CB....074
LTS-3367JG....074
LTS-3367KD....074
LTS-3367KF....074
LTS-3367KR....074
LTS-3367KS....074
LTS-3401LJD....081
LTS-3401LJG....081
LTS-3401LJR....081
LTS-3401LJS....081
LTS-3401LKF....081
LTS-3403LJD....081
LTS-3403LJG....081
LTS-3403LJR....081
LTS-3403LJS....081
LTS-3403LKF....081
LTS-3406LJD....081
LTS-3406LJG....081
LTS-3406LJR....081
LTS-3406LJS....081
LTS-3406LKF....081
LTS-3861CB....073
LTS-3861JD....073
LTS-3861JG....073
LTS-3861JR....073
LTS-3861JS....073
LTS-3861KF....073
LTS-3867CB....074
LTS-3867JD....074
LTS-3867JG....074
LTS-3867KF....074
LTS-3867KR....074
LTS-3867KS....074
LTS-4301CB....075
LTS-4301JD....075
LTS-4301JG....075
LTS-4301JR....075
LTS-4301JS....075
LTS-4301KF....075
LTS-4302CB....076
LTS-4302JD....076
LTS-4302JG....076

Alphanumeric Index

LTS-4302KF 076
LTS-4302KR 076
LTS-4302KS 076
LTS-4312SKR-P 136
LTS-4801CB 075
LTS-4801JD 075
LTS-4801JG 075
LTS-4801JR 075
LTS-4801JS 075
LTS-4801KF 075
LTS-4802CB 076
LTS-4802JD 076
LTS-4802JG 076
LTS-4802KF 076
LTS-4802KR 076
LTS-4802KS 076
LTS-4812SKR-P 136
LTS-5001AJD 079
LTS-5001AJR 079
LTS-5003AJD 079
LTS-5003AJR 079
LTS-50301JG 084
LTS-50301KE 084
LTS-50801JG 084
LTS-50801KE 084
LTS-546ACB 077
LTS-546AJD 077
LTS-546AJG 077
LTS-546AKF 077
LTS-546AKR 077
LTS-546AKS 077
LTS-547ACB 077
LTS-547AJD 077
LTS-547AJG 077
LTS-547AKF 077
LTS-547AKR 077
LTS-547AKS 077
LTS-548ACB 078
LTS-548AJD 078
LTS-548AJG 078
LTS-548AKF 078
LTS-548AKR 078
LTS-548AKS 078
LTS-549ACB 078
LTS-549AJD 078
LTS-549AJG 078
LTS-549AKF 078
LTS-549AKR 078
LTS-549AKS 078
LTS-5501ACB 079
LTS-5503ACB 079
LTS-5601AJG 079
LTS-5603AJG 079
LTS-5701AJS 079
LTS-5701AKF 079
LTS-5703AJS 079
LTS-5703AKF 079
LTS-6475KF 082
LTS-6495KF 082
LTS-6675KR 082
LTS-6695KR 082
LTS-6760CB 080
LTS-6760JD 080
LTS-6760KF 080
LTS-6760KG 080
LTS-6760KR 080
LTS-6760KS 080
LTS-6775JD 082
LTS-6775KG 082
LTS-6780CB 080
LTS-6780JD 080
LTS-6780KF 080
LTS-6780KG 080
LTS-6780KR 080
LTS-6780KS 080
LTS-6795JD 082
LTS-6795KG 082
LTS-6875KS 082
LTS-6895KS 082
LTST-C150KFKT 033
LTST-C150KGKT 033
LTST-C150KRKT 033
LTST-C150KSKT 033
LTST-C150TBKT 033
LTST-C150TGKT 033
LTST-C155KGJRKT 040
LTST-C155KGKSKT 040
LTST-C155TBJSKT 040
LTST-C155TBKFKT 040
LTST-C170KFKT 032
LTST-C170KGKT 032
LTST-C170KRKT 032
LTST-C170KSKT 032
LTST-C170TBKT 032
LTST-C170TGKT 032
LTST-C171KFKT 032
LTST-C171KGKT 032
LTST-C171KRKT 032
LTST-C171KSKT 032
LTST-C171TBKT 032
LTST-C171TGKT 032
LTST-C190KFKT 031
LTST-C190KGKT 031
LTST-C190KRKT 031
LTST-C190KSKT 031
LTST-C190TBKT 031
LTST-C190TGKT 031
LTST-C191KFKT 030
LTST-C191KGKT 030
LTST-C191KRKT 030
LTST-C191KSKT 030
LTST-C191TBKT 030
LTST-C191TGKT 030
LTST-C193KFKT-5A 031
LTST-C193KGKT-5A 031
LTST-C193KRKT-5A 031
LTST-C193KSKT-5A 031
LTST-C193TBKT-5A 031
LTST-C193TGKT-5A 031
LTST-C194KFKT-5A 030
LTST-C194KGKT-5A 030
LTST-C194KRKT-5A 030

Alphanumeric Index

LTST-C194KSKT-5A 030
LTST-C194TBKT-5A 030
LTST-C194TGKT-5A 030
LTST-C195KGJRKT 040
LTST-C195KGKSKT 040
LTST-C195TBJSKT 040
LTST-C195TBKFKT 040
LTST-C199TBKT-5A 029
LTST-C199TGKT-5A 029
LTST-C19FD1WT 043
LTST-C19GD2WT 043
LTST-C19HE1WT 044
LTST-C216KFKT 039
LTST-C216KGKT 039
LTST-C216KRKT 039
LTST-C216KSKT 039
LTST-C216TBKT 039
LTST-C216TGKT 039
LTST-C21KFKT 039
LTST-C21KGKT 039
LTST-C21KRKT 039
LTST-C21KSKT 039
LTST-C21TBKT 039
LTST-C21TGKT 039
LTST-C230KFKT 037
LTST-C230KGKT 037
LTST-C230KRKT 037
LTST-C230KSKT 037
LTST-C230TBKT 037
LTST-C230TGKT 037
LTST-C231KFKT 038
LTST-C231KGKT 038
LTST-C231KRKT 038
LTST-C231KSKT 038
LTST-C231TBKT 038
LTST-C231TGKT 038
LTST-C235KGKRKT 041
LTST-C235KGKSKT 041
LTST-C235TBKFKT 041
LTST-C235TBKGKT 041
LTST-C281KFKT-5A 029
LTST-C281KGKT-5A 029
LTST-C281KRKT-5A 029
LTST-C281KSKT-5A 029
LTST-C281TBKT-5A 029
LTST-C281TGKT-5A 029
LTST-C282KFKT-5A 028
LTST-C282KGKT-5A 028
LTST-C282KRKT-5A 028
LTST-C282KSKT-5A 028
LTST-C282TBKT-5A 028
LTST-C282TGKT-5A 028
LTST-C295KGKRKT 041
LTST-C295KGKSKT 041
LTST-C295TBKFKT 041
LTST-C295TBKGKT 041
LTST-C930KFKT 038
LTST-C930KGKT 038
LTST-C930KRKT 038
LTST-C930KSKT 038
LTST-C930TBKT 038
LTST-C930TGKT 038
LTST-E670FL 027
LTST-E670MBL30 027
LTST-E670MGL30 027
LTST-E670RL 027
LTST-E670SL 027
LTST-M670QFL 025
LTST-M670QGL 025
LTST-M670QRL 025
LTST-M670QSL 025
LTST-M670TBL 025
LTST-M670TGL 025
LTST-S110KFKT 034
LTST-S110KGKT 034
LTST-S110KRKT 034
LTST-S110KSKT 034
LTST-S110TBKT 034
LTST-S110TGKT 034
LTST-S115KGJRKT 042
LTST-S115KGJSKT 042
LTST-S220KFKT 034
LTST-S220KGKT 034
LTST-S220KRKT 034
LTST-S220KSKT 034
LTST-S220TBKT 034
LTST-S220TGKT 034
LTST-S270KFKT 035
LTST-S270KGKT 035
LTST-S270KRKT 035
LTST-S270KSKT 035
LTST-S270TBKT 035
LTST-S270TGKT 035
LTST-S280KFKT 035
LTST-S280KGKT 035
LTST-S280KRKT 035
LTST-S280KSKT 035
LTST-S280TBKT 035
LTST-S280TGKT 035
LTST-S310F3WT 045
LTST-S320KFKT 033
LTST-S320KGKT 033
LTST-S320KRKT 033
LTST-S320KSKT 033
LTST-S320TBKT 033
LTST-S320TGKT 033
LTST-S326KGJRKT 042
LTST-S326KGJSKT 042
LTST-S32F1KT 044
LTST-S480KFKT-5A 037
LTST-S480KGKT-5A 037
LTST-S480KRKT-5A 037
LTST-S480KSKT-5A 037
LTST-S480TBKT-5A 037
LTST-S480TGKT-5A 037
LTST-S481KFKT-5A 036
LTST-S481KGKT-5A 036
LTST-S481KRKT-5A 036
LTST-S481KSKT-5A 036
LTST-S481TBKT-5A 036
LTST-S481TGKT-5A 036
LTST-S482KFKT-5A 036

Alphanumeric Index

LTST-S482KGKT-5A 036
LTST-S482KRKT-5A 036
LTST-S482KSKT-5A 036
LTST-S482TBKT-5A 036
LTST-S482TGKT-5A 036
LTST-T670KFL 026
LTST-T670KGL 026
LTST-T670KRL 026
LTST-T670KSL 026
LTST-T670TBL 026
LTST-T670TGL 026
LTV-123 215
LTV-172A 214
LTV-172G 214
LTV-352T 213
LTV-354T 213
LTV-355T 214
LTV-356T 213
LTV-357T 213
LTV-592A 218
LTV-592G 218
LTV-702F 218
LTV-702V 217
LTV-715F 216
LTV-725V 219
LTV-733 219
LTV-814 215
LTV-815 215
LTV-816 215
LTV-817 214
LTV-824 220
LTV-825 220
LTV-826 219
LTV-827 219
LTV-844 222
LTV-845 222
LTV-846 222
LTV-847 222
LTV-852 216
LTW-006GCG* 023
LTW-006QFL 023
LTW-006QGL 023
LTW-006QRL 023
LTW-006QSL 023
LTW-006TBL 023
LTW-006TGL 023
LTW-008RGB 025
LTW-008ZDCG 023
LTW-010FL 024
LTW-010GCG 024
LTW-010GL 024
LTW-010RL 024
LTW-010SL 024
LTW-010TBL 024
LTW-010TGL 024
LTW-020ZDCG 023
LTW-089E2CG 024
LTW-108GCG* 023
LTW-108QFL 023
LTW-108QGL 023
LTW-108QRL 023
LTW-108QSL 023
LTW-108TBL 023
LTW-108TGL 023
LTW-110TS5 034
LTW-150TK 033
LTW-150ZDC 033
LTW-170TK 032
LTW-170ZDC 032
LTW-193ZDS5 031
LTW-194ZDS5 030
LTW-216TS5 039
LTW-21TS5 039
LTW-220DS5 034
LTW-230ZDS5 037
LTW-270TLA 035
LTW-280DS5 035
LTW-2L3C7S 062
LTW-2N3D7 062
LTW-2R3D7 062
LTW-2S3D8 062
LTW-42NC5 061
LTW-420C5 061
LTW-480DS5 037
LTW-481DS5 036
LTW-482DS5 036
LTWE-670DS-STD 027
LTW-670DS-STD 026
LTW-C190DA5 031
LTW-C191TS5 030
LTW-C193TS5 031
LTW-C194TS5 030
LTW-C199DS5 029
LTW-C230DS 037
LTW-C231DS 038
LTW-C281DS5 029
LTW-C282DS5 028
LTW-E500GSM 028
LTW-E500T 028
LTW-E500GS 028
LTW-G673GS 027
LTW-G673GSM 027
LTW-M140GSM 026
LTW-M140GS 026
LTW-M670GS 025
LTW-M670ZVD 025
MOC3023 216
MOC3052 216
MOC3063 217
MOC3083 217

Opto Components in

MOBIL PHONE

Display Backlight

S/V PLCC 0.8T
S/V PLCC 0.6T
S/V PLCC 0.4T
LTE-S0086

Keypad Backlight

0603 / 0402 0.35T
S/V PLCC 0.4T
S/V Chip LED 0.4T
LGF:LTB-K0F

Camera Flash

LTPL-C011
LTPL-C013
LTPL-C014

IrDA

HSDL-3021
ASDL-3023

Ambient Light Sensor

LTR-195

Charger & Adapter

LTV-817
LTV-816
1206 1.1T
Bi-Color 0605 0.55T

LITEON®
OPTOELECTRONICS

Opto Components in

COMMUNICATION

Lamp for Connector

LTL1CHJGDNN(Green)
LTL1CHJRDNN(Red)
LTL1CHJSDNN(Yellow)

PBX

LTV-172A
LTV-352T
LTV-354T
LTL-423W(Green)

Indication Lamp

LTL1CHKGKNN(Green)
LTL1CHKSKNN(Yellow)
LTL1CHKRKNN(Red)

CBI for Indicator

LTL-4231NHBP
LTL-42M7NH51P

Data Com

Dom Lens
0805 1.1T / 0.8T
1206 1.1T

LITEON® OPTOELECTRONICS

Opto Components in

COMPUTER & PERIPHERALS

NB Indicator

Reverse Mount
Bi-Color Chip LED
S/V Chip LED

Display Backlight

LTB-N08401
LTB-N10401
LTB-N12101
LTB-N13301

SPIDIF

LTDL-TX12S01B
LTDL-TX12S05
LTDL-RX16S01B
LTDL-RX16S05

Switch Power Supply

LTV-817
LTV-816
LTV-357T
LTV-356T

Keyboard Backlight

LTB-L46001
LTB-L47001
LTB-L30001

Optical Mouse

LTL2V3SRKW(Red)
LTL2P3TBK5W(Blue)
LTE-302-M
LTR-5579DP1

Receiver Module

LTOP-TS Series
LTD-3271T-A
LTOP-SS Series

Adapter

LTV-817
LTV-816
LTV-357T

Logo Backlight

LTB-A01801
LTB-A01803

LITEON®
OPTOELECTRONICS

Opto Components in

SIGN & DISPLAY

Traffic Sign

LTL2R3TGK(Pure Green)
LTL2L3VSJ(Yellow)
LTL2L3VTRKS(Red)

Indoor Display

LTP-7388M
LTP-12188M-07
LTP-18188M-01
LTM-0124M-01

Video Display (SMD)

LTST-T670
LTST-E670
LTST-M670

Video Display (Lamp)

LTL5H3TRDS(Red)
LTL5H3TGDS(Green)
LTL3H3TRDS(Red)
LTL3H3TGDS(Green)

LITEON® OPTOELECTRONICS

Opto Components in

CONSUMER ELECTTRONICS

Graphic Display

LTOP-TS Series
LTDL-TX12S01B
LTDL-TX12S05
LTM-0305M-01

Remote Controller

LTST-C171
LTST-C170
LTE-3271FA

LCD TV Backlight

LTPL-C023 / C024
LTB-T03201
LTOP-TS Series
LTOP-MS Series

Air Conditioning

LTOP-TS Series
LTOP-MS Series

MP3 Indication Light

LTL1CHJGDNN(Green)
LTL42TBJ3(Blue)
LTL-42NDP4(White)

GPS Display Backlight

LTE-S0086

Switch Power Supply

LTV-816 / 817
LTV-356T
LTE-C1501
LTR-C1503B

LITEON®
OPTOELECTRONICS

Opto Components in

OFFICE AUTOMATION

Auto Alignment Sensor

LTH-ASLX-02

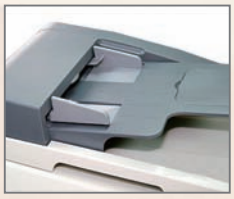

Interrupter

LTH-306-58Wx

Indication Lamp

LTL1KH6GD(Green)
LTL1KH6YT(Yellow)
LTL1KHCBJ2(Blue)

Scanner Light Bar

LTH-MSXL-11F

Media Sensor

LTH-MSXL-11F

LITEON®
OPTOELECTRONICS

Opto Components in

AUTOMOTIVE

Headlamp

LTPL-P013
LTPL-P014

Rear Combination Lamp

LTL911SEKSA(Red)
LTL911SYKDA(Yellow)

Sight Mirror / CHMSL

LTL912SEKSA
LTL912SYKSA

Dashboard

PLCC-2 3538
PLCC-4 3528
PLCC-2 3020

Ash Tray Light

LTPL-P011
LTPL-P013
LTPL-P014

LITEON®
OPTOELECTRONICS

Opto Components in

LIGHTING

Portable Light

LTPL-P011
LTPL-P013
LTW-2S3D7(White)

Architecture Lighting

LTPL-P011
LTPL-P013
LTPL-P014

Security Lighting

LTPL-P00S
LTPL-P00D
LTPL-P011

Decoration Lighting

LTPL-P011
LTPL-P013
LTPL-P014

Street Lamp

LTPL-P013
LTPL-P014

Indoor Lighting

LTPL-P013
LTPL-P014

Refrigerated lighting

LTPL-P00S
LTPL-P00D

Night Lighting

LTV-817
LTV-816
LTV-357T
LTV-356T

LITEON®
OPTOELECTRONICS

Opto Components in

INDUSTRIAL

Servo Motor

Single / Two / Three / Four Digits Numeric LED Display

Power Meter

LTV-817
LTV-816
LTOP-TS Series
LTOP-MS Series

Segement Display

LTR-195
LTS-4801 Series
LTS-3867 Series
LTS-546 Series

CCTV

LTE-3376
LTE-3226
LTE-3276
LTR-195ALS-21

LITEON
OPTOELECTRONICS

Quality & Reliability

1. Introduction

One of the most important factors in any business is quality. Product quality is a key factor in gaining and holding market share. Our basic corporate philosophy is to provide high quality products at the best prices, an ideal which requires the careful management of quality control at all levels. OPTO manufacturers that have aggressive quality improvement programs will be the predominant suppliers in the future; those which do not probably will not survive.

At Lite-On our quality objective is not to just be competitive, but to be recognized as the worldwide leader in quality and reliability of OPTO products. To achieve this goal, we implemented the quality system of IECQ / ISO 9000 in 1991, got the IECQ factory approval, ISO 9002 certificate in 1993, ISO 9001 certificate in 1994, QS 9000 certificate in 1999, and TS 16949 in 2005. And all Lite-On employees in each organizations must understand what is required of them in their job for quality and reliability leadership, and they must be dedicated to conforming to those requirements.

2. Quality Policy

We provide the best value to our customers by continuous understanding, accepting, meeting and exceeding customers needs, wants, and expectations.

3. Reliability

3.1 The fundamental objective of Lite-On reliability program is to ensure that our products meet or exceed our customer's requirement. To achieve this goal the Reliability section constantly monitors products. This monitoring provides continuous updated measurement of product reliability in specific operating environments.

3.2 Purpose of reliability test. To specify suitable conditions obtainable in the laboratory and at device level which give test results equivalent to the actual service conditions existing in the field and to obtain reproducibility of the results of test.

3.3 Functions

- New material quality evaluation
- New product, process and package evaluation and qualification.
- Mass production products reliability monitoring.
- Competitor's product evaluation.
- Customer special requirement.
- Long term reliability prediction.

SMD LED

SMD LED lamps from Lite-On are available in miniature sizes and special configurations for automated PC board assembly and space-sensitive applications. These SMD LED lamps are suitable for use in a wide variety of electronic equipment, including cordless and cellular phones, notebook computers, network systems, home appliances, and indoor signboard applications.

Single color and bicolor Chip LEDs from Lite-On are available in 1206, 0805, and 0603 packages with thicknesses of 0.8mm, 0.6mm and 0.4mm, in both top view and side view configurations. A new introduction to our broad range of Chip LEDs is the 3-in-1 RGB Chip LED using high brightness AlInGaP and InGaN dice. These are particularly popular for portable appliance applications (such as cellular phones) in view of their vivid colors and low power consumption.

Our new generation of PLCC LEDs are rated at JEDEC Level 2 for moisture sensitivity. Lite-On's PLCC LEDs are available in all standard single colors as well as in bicolor configurations.

SMD LED

Side View PLCC 2.8(L) x 1.2(W) x 0.8(H)mm

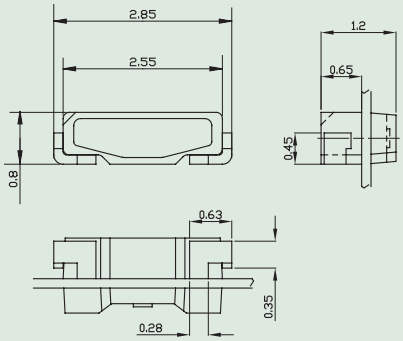

Part No.	Material	Lens Color	Wd	Viewing Angle 2 $\theta^{1/2}$*	I_V Typ. @ 20mA	V_F Typ. @ 20mA	Tape and Reel
LTW-108TBL	InGaN Blue	Water Clear	470nm	110°	240mcd	3.3V	2,000 pcs per Reel
LTW-108TGL	InGaN Pure Green	Water Clear	525nm	110°	400mcd	3.3V	2,000 pcs per Reel
LTW-108QGL	AlInGaP Yellow Green	Water Clear	571nm	110°	90mcd	2.0V	2,000 pcs per Reel
LTW-108QSL	AlInGaP Yellow	Water Clear	589nm	110°	140mcd	2.0V	2,000 pcs per Reel
LTW-108QFL	AlInGaP Orange	Water Clear	605nm	110°	180mcd	2.0V	2,000 pcs per Reel
LTW-108QRL	AlInGaP Red	Water Clear	631nm	110°	140mcd	2.0V	2,000 pcs per Reel
LTW-008ZDCG	InGaN White	Yellow	(0.30, 0.29)	110°	1500mcd	3.3V	2,000 pcs per Reel
LTW-108GCG*	InGaN White	Yellow	(0.30, 0.29)	110°	1900mcd	3.3V	2,000 pcs per Reel

Side View PLCC 3.8(L) x 1.2(W) x 0.6(H)mm

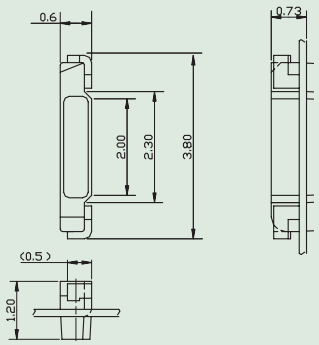

Part No.	Material	Lens Color	Wd	Viewing Angle 2 $\theta^{1/2}$*	I_V Typ. @ 20mA	V_F Typ. @ 20mA	Tape and Reel
LTW-006TBL	InGaN Blue	Water Clear	470nm	110°	240mcd	3.3V	2,000 pcs per Reel
LTW-006TGL	InGaN Pure Green	Water Clear	525nm	110°	400mcd	3.3V	2,000 pcs per Reel
LTW-006QGL	AlInGaP Yellow Green	Water Clear	571nm	110°	90mcd	2.0V	2,000 pcs per Reel
LTW-006QSL	AlInGaP Yellow	Water Clear	589nm	110°	140mcd	2.0V	2,000 pcs per Reel
LTW-006QFL	AlInGaP Orange	Water Clear	605nm	110°	180mcd	2.0V	2,000 pcs per Reel
LTW-006QRL	AlInGaP Red	Water Clear	631nm	110°	140mcd	2.0V	2,000 pcs per Reel
LTW-020ZDCG	InGaN White	Yellow	(0.30, 0.29)	110°	1400mcd	3.3V	2,000 pcs per Reel
LTW-006GCG*	InGaN White	Yellow	(0.30, 0.29)	110°	1800mcd	3.3V	2,000 pcs per Reel

SMD LED

Side View PLCC 3.8(L) x 1.0(W) x 0.4(H)mm

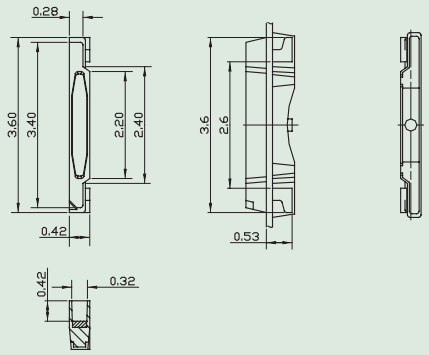

Part No.	Material	Lens Color	Wd	Viewing Angle 2 $\theta^{1}/_{2}$*	I_V Typ. @ 20mA	V_F Typ. @ 20mA	Tape and Reel
LTW-010TBL	InGaN Blue	Water Clear	470nm	110°	240mcd	3.3V	2,000 pcs per Reel
LTW-010TGL	InGaN Pure Green	Water Clear	525nm	110°		3.3V	2,000 pcs per Reel
LTW-010GL	AlInGaP Yellow Green	Water Clear	571nm	110°		2.0V	2,000 pcs per Reel
LTW-010SL	AlInGaP Yellow	Water Clear	589nm	110°	140mcd	2.0V	2,000 pcs per Reel
LTW-010FL	AlInGaP Orange	Water Clear	605nm	110°	180mcd	2.0V	2,000 pcs per Reel
LTW-010RL	AlInGaP Red	Water Clear	631nm	110°	140mcd	2.0V	2,000 pcs per Reel
LTW-010GCG	InGaN White	Yellow	(0.30, 0.29)	110°	1400mcd	3.3V	2,000 pcs per Reel

Side View PLCC 3.0(L) x 1.4(W) x 1.4(H)mm

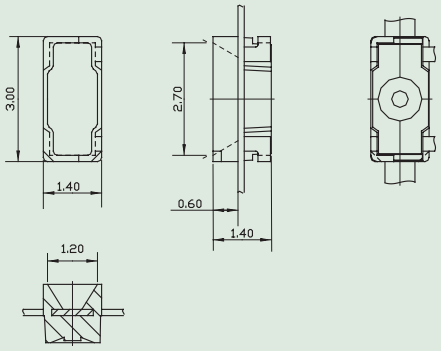

Part No.	Material	Lens Color	Wd	Viewing Angle 2 $\theta^{1}/_{2}$*	I_V Typ. @ 20mA	V_F Typ. @ 20mA	Tape and Reel
LTW-089E2CG	InGaN White	Yellow	(0.30, 0.29)	120°	2000mcd	3.3V	2,000 pcs per Reel

Side View PLCC 3.8(L) x 1.0(W) x 0.8(H)mm

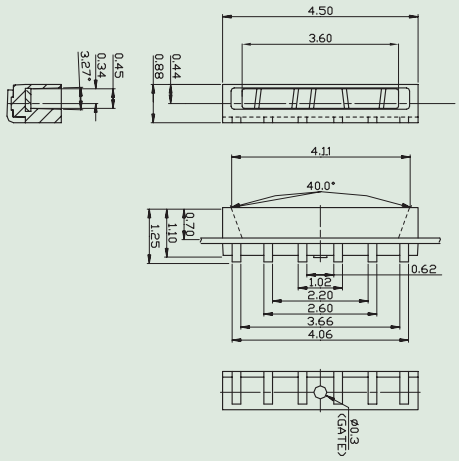

Part No.	Material	Lens Color	Wd	Viewing Angle 2 θ1/2*	Iv Typ. @ 20mA	VF Typ. @ 20mA	Tape and Reel
LTW-008RGB	Red	Water Clear	624nm	120°	1000mcd	2.0V	2,000 pcs per Reel
	Green		525nm			3.3V	
	Blue		460nm			3.3V	

Top View PLCC 3.0(L) x 2.0(W) x 1.3(H)mm-PLCC2

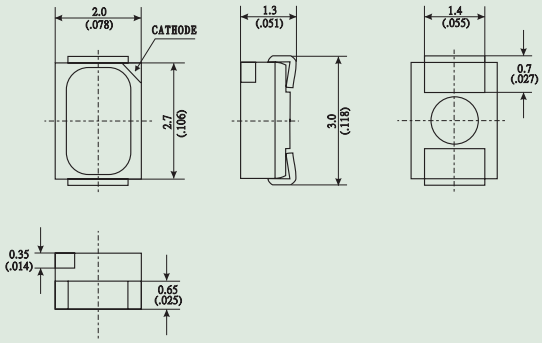

Part No.	Material	Lens Color	Wd	Viewing Angle 2 θ1/2*	Iv Typ. @ 20mA	VF Typ. @ 20mA	Tape and Reel
LTST-M670TBL	InGaN Blue	Water Clear	470nm	120°	450mcd	3.3V	2,000 pcs per Reel
LTST-M670TGL	InGaN Pure Green	Water Clear	525nm	120°	1200mcd	3.3V	2,000 pcs per Reel
LTST-M670QGL	AlInGaP Yellow Green	Water Clear	571nm	120°	135mcd	2.0V	2,000 pcs per Reel
LTST-M670QSL	AlInGaP Yellow	Water Clear	589nm	120°	200mcd	2.0V	2,000 pcs per Reel
LTST-M670QFL	AlInGaP Orange	Water Clear	605nm	120°	280mcd	2.0V	2,000 pcs per Reel
LTST-M670QRL	AlInGaP Red	Water Clear	631nm	120°	200mcd	2.0V	2,000 pcs per Reel
LTW-M670ZVD	InGaN White	Yellow	(0.30, 0.29)	120°	1600mcd	3.3V	2,000 pcs per Reel
LTW-M670GS	InGaN White	Yellow	(0.30, 0.29)	120°	1800mcd	3.3V	2,000 pcs per Reel

SMD LED

Top View PLCC 3.5(L) x 2.7(W) x 1.9(H)mm-PLCC2

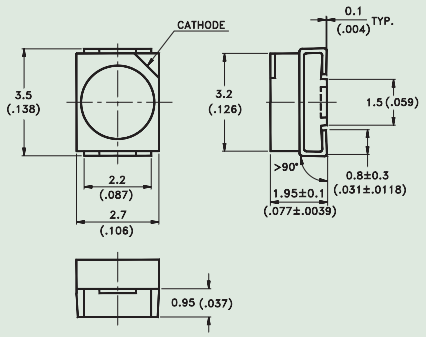

Part No.	Material	Lens Color	Wd	Viewing Angle 2 $\theta^{1/2}$*	I_V Typ. @ 20mA	V_F Typ. @ 20mA	Tape and Reel
LTST-T670TBL	InGaN Blue	Water Clear	470nm	120°	90mcd	3.3V	2,000 pcs per Reel
LTST-T670TGL	InGaN Pure Green	Water Clear	525nm	120°	350mcd	3.3V	2,000 pcs per Reel
LTST-T670KGL	AlInGaP Yellow Green	Water Clear	571nm	120°	70mcd	2.0V	2,000 pcs per Reel
LTST-T670KSL	AlInGaP Yellow	Water Clear	589nm	120°	150mcd	2.0V	2,000 pcs per Reel
LTST-T670KFL	AlInGaP Orange	Water Clear	605nm	120°	150mcd	2.0V	2,000 pcs per Reel
LTST-T670KRL	AlInGaP Red	Water Clear	631nm	120°	110mcd	2.0V	2,000 pcs per Reel
LTW-670DS-STD	InGaN White	Yellow	(0.30, 0.29)	120°	1600mcd	3.3V	2,000 pcs per Reel

Top View PLCC 3.0(L) x 1.4(W) x 1.3(H)mm-PLCC2

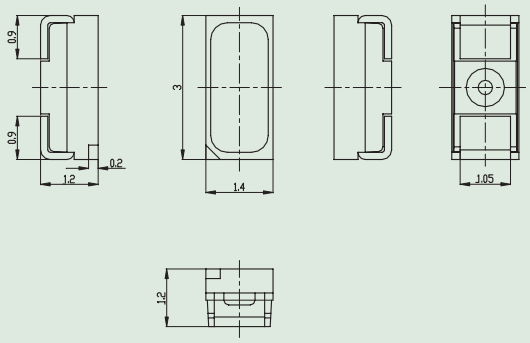

Part No.	Material	Lens Color	Wd	Viewing Angle 2 $\theta^{1/2}$*	I_V Typ. @ 20mA	V_F Typ. @ 30mA	Tape and Reel
LTW-M140GS	InGaN White	Yellow	(0.30,0,20)	120°	2000mcd	3.3V	2,000 pcs per Reel
LTW-M140GSM	InGaN White	Orange	(0.30,0,29)	120°	1600mcd	3.3V	2,000 pcs per Reel

Top View PLCC 3.5(L) x 2.8(W) x 1.9(H)mm-PLCC4

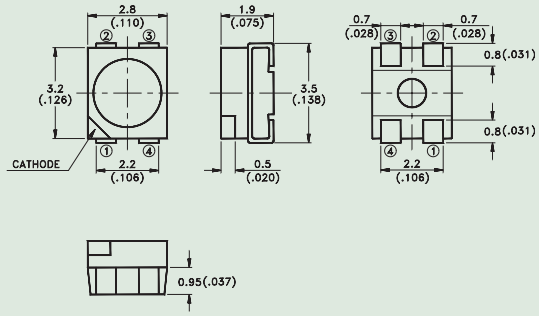

Part No.	Material	Lens Color	Wd	Viewing Angle 2 θ1/2*	Iv Typ. @ 30mA	VF Typ. @ 30mA	Tape and Reel
LTST-E670MBL30	InGaN Blue	Water Clear	470nm	120°	180mcd	4.0V	2,000 pcs per Reel
LTST-E670MGL30	InGaN Pure Green	Water Clear	525nm	120°	600mcd	4.0V	2,000 pcs per Reel
LTST-E670SL	AlInGaP Yellow	Water Clear	589nm	120°	1200mcd	2.1V	2,000 pcs per Reel
LTST-E670FL	AlInGaP Orange	Water Clear	605nm	120°	1200mcd	2.1V	2,000 pcs per Reel
LTST-E670RL	AlInGaP Red	Water Clear	631nm	120°	950mcd	2.1V	2,000 pcs per Reel
LTWE-670DS-STD	InGaN White	Yellow	(0.30, 0.29)	120°	2100mcd	3.4V	2,000 pcs per Reel

Top View PLCC 3.5(L) x 2.8(W) x 1.3(H)mm-PLCC6

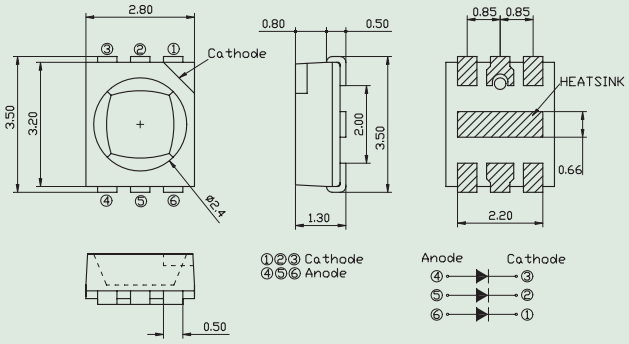

Part No.	Material	Lens Color	Wd	Viewing Angle 2 θ1/2*	Iv Typ. @ 20mA per dice	VF Typ. @ 20mA	Tape and Reel
LTW-G673GS	InGaN White	Yellow	(0.30, 0.29)	120°	5000mcd	3.3V	2,000 pcs per Reel
LTW-G673GSM	InGaN White	Orange	(0.30, 0.29)	120°	4000mcd	3.3V	2,000 pcs per Reel

SMD LED

Top View Chip LED (0402/0.3T) 1.0(L) 0.5(W) x 0.3(H)mm

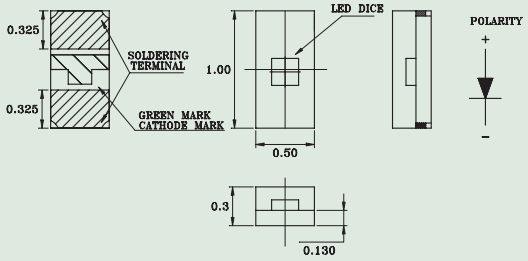

Part No.	Material	Lens Color	Wd	Viewing Angle 2 $\theta^{1}/_{2}$*	I_V Typ. @ 5mA	V_F Typ. @ 5mA	Tape and Reel
LTST-C282TBKT-5A	InGaN Blue	Water Clear	470nm	130°	28mcd	2.9V	3,000 pcs per Reel
LTST-C282TGKT-5A	InGaN Pure Green	Water Clear	525nm	130°	90mcd	2.9V	3,000 pcs per Reel
LTST-C282KGKT-5A	AlInGaP Yellow Green	Water Clear	571nm	130°	12mcd	1.9V	3,000 pcs per Reel
LTST-C282KSKT-5A	AlInGaP Yellow	Water Clear	589nm	130°	22mcd	1.9V	3,000 pcs per Reel
LTST-C282KFKT-5A	AlInGaP Orange	Water Clear	605nm	130°	28mcd	1.9V	3,000 pcs per Reel
LTST-C282KRKT-5A	AlInGaP Red	Water Clear	631nm	130°	14mcd	1.9V	3,000 pcs per Reel
LTW-C282DS5	InGaN White	Yellow	(0.30, 0.29)	130°	112mcd	2.9V	3,000 pcs per Reel

Top View PLCC 5.0(L) x 5.0(W) x 1.2(H)mm

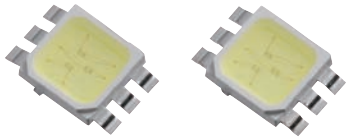

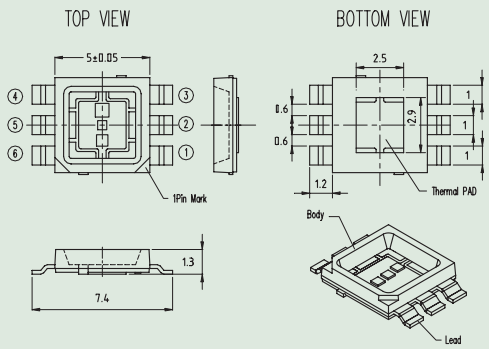

Part No.	Material	Lens Color	Wd	Viewing Angle 2 $\theta^{1}/_{2}$*	I_m Typ. @ 20mA per dice	V_F Typ. @ 20mA	Tape and Reel
LTW-E500T	Red	Water Clear	631nm	130°	9lm	2.2V	1,000 pcs per Reel
	Green		525nm			3.3V	
	Blue		470nm			3.3V	
LTW-E500GS	InGaN White	Yellow	(0.30, 0.29)	130°	16lm	3.3V	1,000 pcs per Reel
LTW-E500GSM	InGaN White	Orange	(0.30, 0.29)	130°	12lm	3.3V	1,000 pcs per Reel

Top View Chip LED (0402/0.35T) 1.0(L) x0.5(W) x 0.35(H)mm

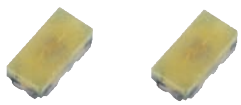

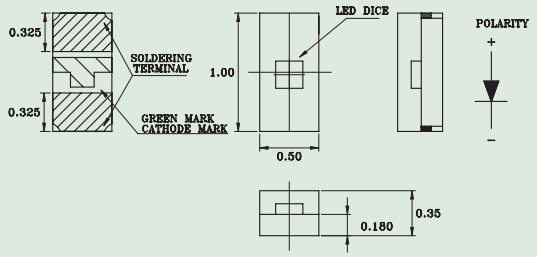

Part No.	Material	Lens Color	Wd	Viewing Angle 2 $\theta^{1/2}$*	I_V Typ. @ 5mA	V_F Typ. @ 5mA	Tape and Reel
LTST-C281TBKT-5A	InGaN Blue	Water Clear	470nm	130°	28mcd	2.9V	3,000 pcs per Reel
LTST-C281TGKT-5A	InGaN Pure Green	Water Clear	525nm	130°	90mcd	2.9V	3,000 pcs per Reel
LTST-C281KGKT-5A	AlInGaP Yellow Green	Water Clear	571nm	130°	12mcd	1.9V	3,000 pcs per Reel
LTST-C281KSKT-5A	AlInGaP Yellow	Water Clear	589nm	130°	22mcd	1.9V	3,000 pcs per Reel
LTST-C281KFKT-5A	AlInGaP Orange	Water Clear	605nm	130°	28mcd	1.9V	3,000 pcs per Reel
LTST-C281KRKT-5A	AlInGaP Red	Water Clear	631nm	130°	14mcd	1.9V	3,000 pcs per Reel
LTW-C281DS5	InGaN White	Yellow	(0.30, 0.29)	130°	112mcd	2.9V	3,000 pcs per Reel

Top View Chip LED (0603/0.2T) 1.6(L) x 0.8(W) x 0.2(H)mm

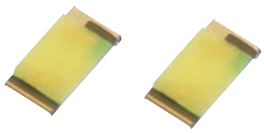

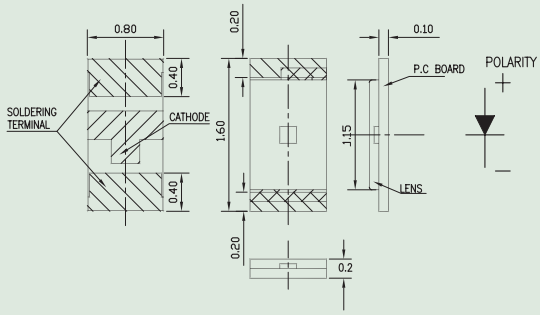

Part No.	Material	Lens Color	Wd	Viewing Angle 2 $\theta^{1/2}$*	I_V Typ. @ 5mA	V_F Typ. @ 5mA	Tape and Reel
LTST-C199TBKT-5A	InGaN Blue	Water Clear	470nm	130°	28mcd	2.9V	3,000 pcs per Reel
LTST-C199TGKT-5A	InGaN Pure Green	Water Clear	525nm	130°	90mcd	2.9V	3,000 pcs per Reel
LTW-C199DS5	InGaN White	Yellow	(0.30, 0.29)	130°	112mcd	2.9V	3,000 pcs per Reel

SMD LED

Top View Chip LED (0603/0.3T) 1.60(L) x 0.8(W) x 0.3(H)mm

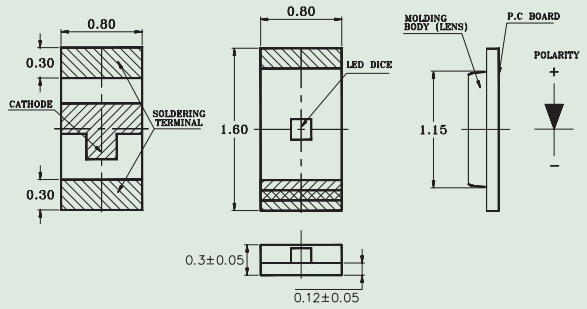

Part No.	Material	Lens Color	Wd	Viewing Angle 2 $\theta^{1/2}$*	I_V Typ. @ 5mA	V_F Typ. @ 5mA	Tape and Reel
LTST-C194TBKT-5A	InGaN Blue	Water Clear	470nm	130°	28mcd	2.9V	3,000 pcs per Reel
LTST-C194TGKT-5A	InGaN Pure Green	Water Clear	525nm	130°	90mcd	2.9V	3,000 pcs per Reel
LTST-C194KGKT-5A	AlInGaP Yellow Green	Water Clear	571nm	130°	12mcd	1.9V	3,000 pcs per Reel
LTST-C194KSKT-5A	AlInGaP Yellow	Water Clear	589nm	130°	22mcd	1.9V	3,000 pcs per Reel
LTST-C194KFKT-5A	AlInGaP Orange	Water Clear	605nm	130°	28mcd	1.9V	3,000 pcs per Reel
LTST-C194KRKT-5A	AlInGaP Red	Water Clear	631nm	130°	14mcd	1.9V	3,000 pcs per Reel
LTW-C194TS5	InGaN White	Yellow	(0.30, 0.29)	130°	71mcd	2.9V	3,000 pcs per Reel
LTW-194ZDS5	InGaN White	Yellow	(0.30, 0.29)	130°	112mcd	2.9V	3,000 pcs per Reel

Top View Chip LED (0603/0.55T) 1.6(L) x 0.8(W) x 0.55(H)mm

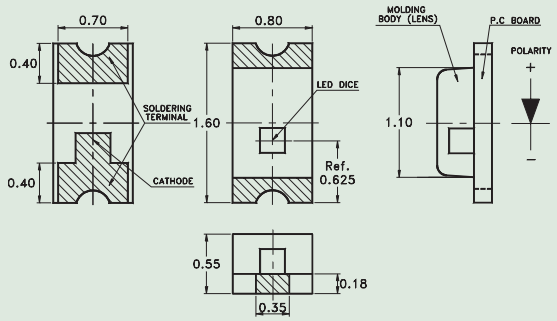

Part No.	Material	Lens Color	Wd	Viewing Angle 2 $\theta^{1/2}$*	I_V Typ. @ 20mA	V_F Typ. @ 20mA	Tape and Reel
LTST-C191TBKT	InGaN Blue	Water Clear	470nm	130°	50mcd	3.3V	3,000 pcs per Reel
LTST-C191TGKT	InGaN Pure Green	Water Clear	525nm	130°	150mcd	3.3V	3,000 pcs per Reel
LTST-C191KGKT	AlInGaP Yellow Green	Water Clear	571nm	130°	35mcd	2.0V	3,000 pcs per Reel
LTST-C191KSKT	AlInGaP Yellow	Water Clear	589nm	130°	50mcd	2.0V	3,000 pcs per Reel
LTST-C191KFKT	AlInGaP Orange	Water Clear	605nm	130°	90mcd	2.0V	3,000 pcs per Reel
LTST-C191KRKT	AlInGaP Red	Water Clear	631nm	130°	60mcd	2.0V	3,000 pcs per Reel
LTW-C191TS5	InGaN White	Yellow	(0.30, 0.29)	130°	112mcd @ 5mA	2.9V	3,000 pcs per Reel

Top View Chip LED (0603/0.35T) 1.60(L) x 0.8(W) x 0.35(H)mm

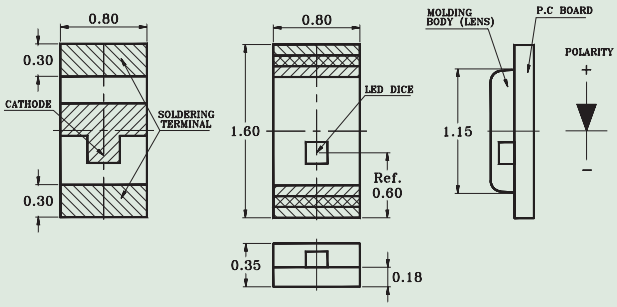

Part No.	Material	Lens Color	Wd	Viewing Angle 2 $\theta^{1/2}$*	I_V Typ. @ 5mA	V_F Typ. @ 5mA	Tape and Reel
LTST-C193TBKT-5A	InGaN Blue	Water Clear	470nm	130°	28mcd	2.9V	3,000 pcs per Reel
LTST-C193TGKT-5A	InGaN Pure Green	Water Clear	525nm	130°	90mcd	2.9V	3,000 pcs per Reel
LTST-C193KGKT-5A	AlInGaP Yellow Green	Water Clear	571nm	130°	12mcd	1.9V	3,000 pcs per Reel
LTST-C193KSKT-5A	AlInGaP Yellow	Water Clear	589nm	130°	22mcd	1.9V	3,000 pcs per Reel
LTST-C193KFKT-5A	AlInGaP Orange	Water Clear	605nm	130°	28mcd	1.9V	3,000 pcs per Reel
LTST-C193KRKT-5A	AlInGaP Red	Water Clear	631nm	130°	14mcd	1.9V	3,000 pcs per Reel
LTW-C193TS5	InGaN White	Yellow	(0.30, 0.29)	130°	112mcd	2.9V	3,000 pcs per Reel
LTW-193ZDS5	InGaN White	Yellow	(0.30, 0.29)	130°	112mcd	2.9V	3,000 pcs per Reel

Top View Chip LED (0603/0.8T) 1.6(L) x 0.8(W) x 0.8(H)mm

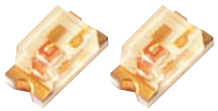

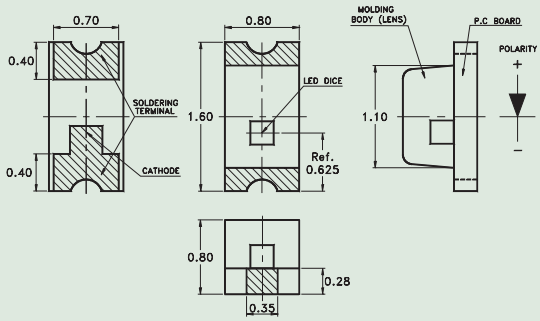

Part No.	Material	Lens Color	Wd	Viewing Angle 2 $\theta^{1/2}$*	I_V Typ. @ 20mA	V_F Typ. @ 20mA	Tape and Reel
LTST-C190TBKT	InGaN Blue	Water Clear	470nm	130°	50mcd	3.3V	3,000 pcs per Reel
LTST-C190TGKT	InGaN Pure Green	Water Clear	525nm	130°	150mcd	3.3V	3,000 pcs per Reel
LTST-C190KGKT	AlInGaP Yellow Green	Water Clear	571nm	130°	35mcd	2.0V	3,000 pcs per Reel
LTST-C190KSKT	AlInGaP Yellow	Water Clear	589nm	130°	50mcd	2.0V	3,000 pcs per Reel
LTST-C190KFKT	AlInGaP Orange	Water Clear	605nm	130°	90mcd	2.0V	3,000 pcs per Reel
LTST-C190KRKT	AlInGaP Red	Water Clear	631nm	130°	60mcd	2.0V	3,000 pcs per Reel
LTW-C190DA5	InGaN White	Yellow	(0.20, 0.31)	130°	112mcd @ 5mA	2.9V	3,000 pcs per Reel

SMD LED

Top View Chip LED (0805/1.1T) 2.0(L) x 1.25(W) x 1.1(H)mm

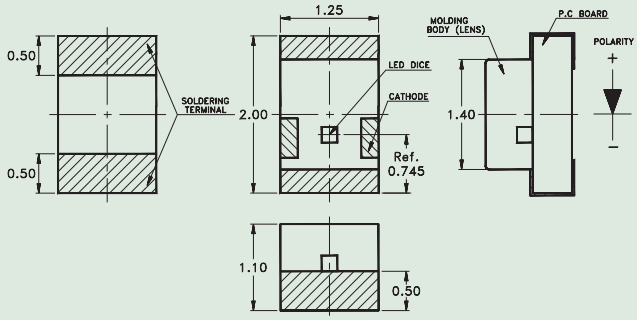

Part No.	Material	Lens Color	Wd	Viewing Angle 2 $\theta^{1}/_{2}$*	I_V Typ. @ 20mA	V_F Typ. @ 20mA	Tape and Reel
LTST-C170TBKT	InGaN Blue	Water Clear	470nm	130°	50mcd	3.3V	3,000 pcs per Reel
LTST-C170TGKT	InGaN Pure Green	Water Clear	525nm	130°	150mcd	3.3V	3,000 pcs per Reel
LTST-C170KGKT	AlInGaP Yellow Green	Water Clear	571nm	130°	35mcd	2.0V	3,000 pcs per Reel
LTST-C170KSKT	AlInGaP Yellow	Water Clear	589nm	130°	50mcd	2.0V	3,000 pcs per Reel
LTST-C170KFKT	AlInGaP Orange	Water Clear	605nm	130°	90mcd	2.0V	3,000 pcs per Reel
LTST-C170KRKT	AlInGaP Red	Water Clear	631nm	130°	60mcd	2.0V	3,000 pcs per Reel
LTW-170TK	InGaN White	Yellow	(0.25, 0.22)	130°	280mcd	3.3V	3,000 pcs per Reel
LTW-170ZDC	InGaN White	Yellow	(0.30, 0.29)	130°	280mcd	3.3V	3,000 pcs per Reel

Top View Chip LED (0805/0.80T) 2.0(L) x 1.25(W) x 0.8(H)mm

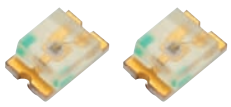

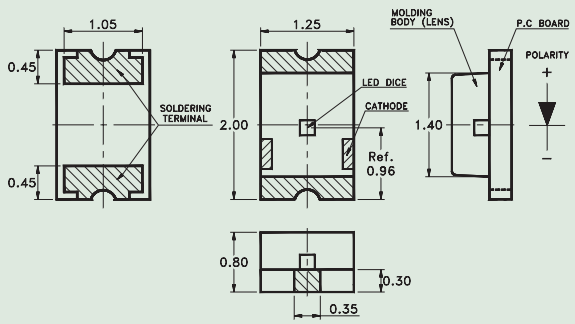

Part No.	Material	Lens Color	Wd	Viewing Angle 2 $\theta^{1}/_{2}$*	I_V Typ. @ 20mA	V_F Typ. @ 20mA	Tape and Reel
LTST-C171TBKT	InGaN Blue	Water Clear	470nm	130°	50mcd	3.3V	3,000 pcs per Reel
LTST-C171TGKT	InGaN Pure Green	Water Clear	525nm	130°	150mcd	3.3V	3,000 pcs per Reel
LTST-C171KGKT	AlInGaP Yellow Green	Water Clear	571nm	130°	35mcd	2.0V	3,000 pcs per Reel
LTST-C171KSKT	AlInGaP Yellow	Water Clear	589nm	130°	50mcd	2.0V	3,000 pcs per Reel
LTST-C171KFKT	AlInGaP Orange	Water Clear	605nm	130°	90mcd	2.0V	3,000 pcs per Reel
LTST-C171KRKT	AlInGaP Red	Water Clear	631nm	130°	60mcd	2.0V	3,000 pcs per Reel

Top View Chip LED (1206/1.1T) 3.2(L) x 1.6(W) x 1.1(H)mm

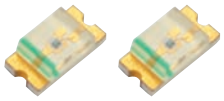

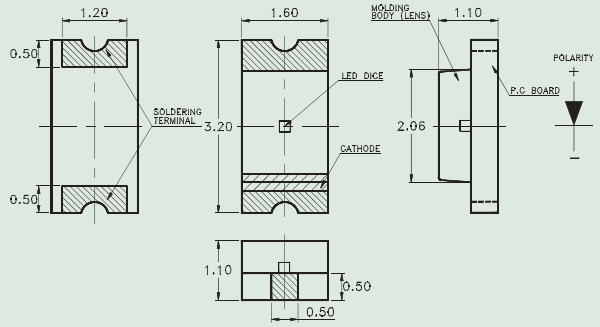

Part No.	Material	Lens Color	Wd	Viewing Angle 2 $\theta^{1/2}$*	I_V Typ. @ 20mA	V_F Typ. @ 20mA	Tape and Reel
LTST-C150TBKT	InGaN Blue	Water Clear	470nm	130°	50mcd	3.3V	3,000 pcs per Reel
LTST-C150TGKT	InGaN Pure Green	Water Clear	525nm	130°	150mcd	3.3V	3,000 pcs per Reel
LTST-C150KGKT	AlInGaP Yellow Green	Water Clear	571nm	130°	35mcd	2.0V	3,000 pcs per Reel
LTST-C150KSKT	AlInGaP Yellow	Water Clear	589nm	130°	50mcd	2.0V	3,000 pcs per Reel
LTST-C150KFKT	AlInGaP Orange	Water Clear	605nm	130°	90mcd	2.0V	3,000 pcs per Reel
LTST-C150KRKT	AlInGaP Red	Water Clear	631nm	130°	60mcd	2.0V	3,000 pcs per Reel
LTW-150TK	InGaN White	Yellow	(0.25, 0.22)	130°	280mcd	3.3V	3,000 pcs per Reel
LTW-150ZDC	InGaN White	Yellow	(0.30, 0.29)	130°	280mcd	3.3V	3,000 pcs per Reel

Side View Chip LED 3.0(L) x 2.0(W) x 1.0(H)mm

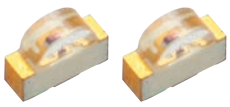

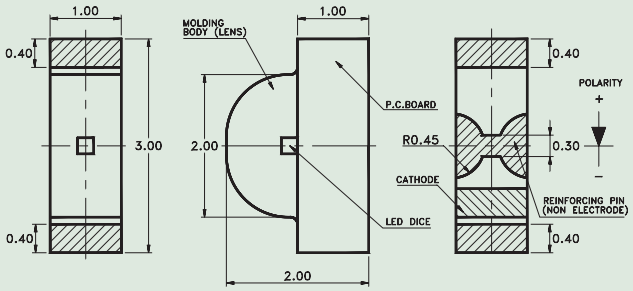

Part No.	Material	Lens Color	Wd	Viewing Angle 2 $\theta^{1/2}$*	I_V Typ. @ 20mA	V_F Typ. @ 20mA	Tape and Reel
LTST-S320TBKT	InGaN Blue	Water Clear	470nm	130°	50mcd	3.3V	3,000 pcs per Reel
LTST-S320TGKT	InGaN Pure Green	Water Clear	525nm	130°	150mcd	3.3V	3,000 pcs per Reel
LTST-S320KGKT	AlInGaP Yellow Green	Water Clear	571nm	130°	35mcd	2.0V	3,000 pcs per Reel
LTST-S320KSKT	AlInGaP Yellow	Water Clear	589nm	130°	50mcd	2.0V	3,000 pcs per Reel
LTST-S320KFKT	AlInGaP Orange	Water Clear	605nm	130°	90mcd	2.0V	3,000 pcs per Reel
LTST-S320KRKT	AlInGaP Red	Water Clear	631nm	130°	60mcd	2.0V	3,000 pcs per Reel

SMD LED

Side View Chip LED 3.2(L) x 1.5(W) x 1.0(H)mm

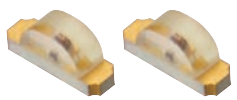

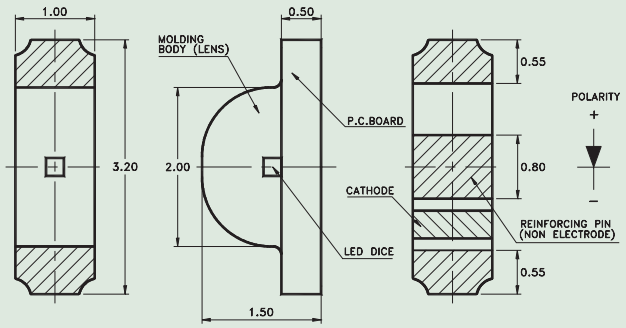

Part No.	Material	Lens Color	Wd	Viewing Angle 2 $\theta^{1}/_{2}$*	I_V Typ. @ 20mA	V_F Typ. @ 20mA	Tape and Reel
LTST-S110TBKT	InGaN Blue	Water Clear	470nm	130°	50mcd	3.3V	3,000 pcs per Reel
LTST-S110TGKT	InGaN Pure Green	Water Clear	525nm	130°	150mcd	3.3V	3,000 pcs per Reel
LTST-S110KGKT	AlInGaP Yellow Green	Water Clear	571nm	130°	35mcd	2.0V	3,000 pcs per Reel
LTST-S110KSKT	AlInGaP Yellow	Water Clear	589nm	130°	50mcd	2.0V	3,000 pcs per Reel
LTST-S110KFKT	AlInGaP Orange	Water Clear	605nm	130°	90mcd	2.0V	3,000 pcs per Reel
LTST-S110KRKT	AlInGaP Red	Water Clear	631nm	130°	60mcd	2.0V	3,000 pcs per Reel
LTW-110TS5	InGaN White	Yellow	(0.30, 0.29)	130°	45mcd @ 5mA	2.9V	3,000 pcs per Reel

Side View Chip LED 2.1(L) x 1.0(W) x 0.6(H)mm

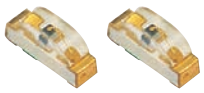

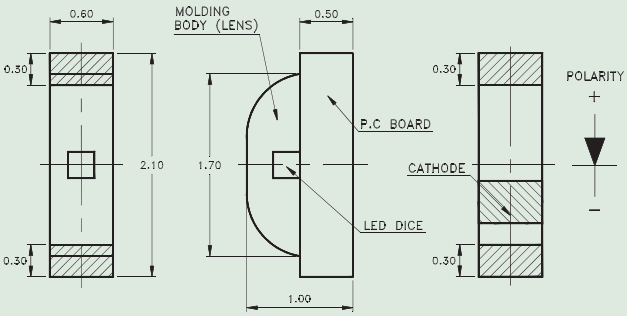

Part No.	Material	Lens Color	Wd	Viewing Angle 2 $\theta^{1}/_{2}$*	I_V Typ. @ 20mA	V_F Typ. @ 20mA	Tape and Reel
LTST-S220TBKT	InGaN Blue	Water Clear	470nm	130°	50mcd	3.3V	3,000 pcs per Reel
LTST-S220TGKT	InGaN Pure Green	Water Clear	525nm	130°	150mcd	3.3V	3,000 pcs per Reel
LTST-S220KGKT	AlInGaP Yellow Green	Water Clear	571nm	130°	35mcd	2.0V	3,000 pcs per Reel
LTST-S220KSKT	AlInGaP Yellow	Water Clear	589nm	130°	50mcd	2.0V	3,000 pcs per Reel
LTST-S220KFKT	AlInGaP Orange	Water Clear	605nm	130°	90mcd	2.0V	3,000 pcs per Reel
LTST-S220KRKT	AlInGaP Red	Water Clear	631nm	130°	60mcd	2.0V	3,000 pcs per Reel
LTW-220DS5	InGaN White	Yellow	(0.30, 0.29)	130°	71mcd @ 5mA	2.9V	3,000 pcs per Reel

Side View Chip LED 1.6(L) x 1.15(W) x 0.6(H)mm

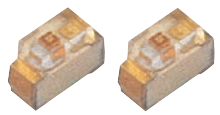

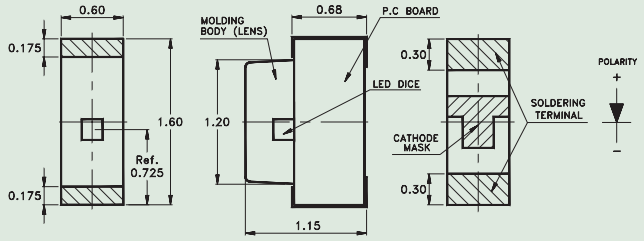

Part No.	Material	Lens Color	Wd	Viewing Angle 2 $\theta^{1/2}$*	I_V Typ. @ 20mA	V_F Typ. @ 20mA	Tape and Reel
LTST-S270TBKT	InGaN Blue	Water Clear	470nm	130°	50mcd	3.3V	4,000 pcs per Reel
LTST-S270TGKT	InGaN Pure Green	Water Clear	525nm	130°	150mcd	3.3V	4,000 pcs per Reel
LTST-S270KGKT	AlInGaP Yellow Green	Water Clear	571nm	130°	35mcd	2.0V	4,000 pcs per Reel
LTST-S270KSKT	AlInGaP Yellow	Water Clear	589nm	130°	50mcd	2.0V	4,000 pcs per Reel
LTST-S270KFKT	AlInGaP Orange	Water Clear	605nm	130°	90mcd	2.0V	4,000 pcs per Reel
LTST-S270KRKT	AlInGaP Red	Water Clear	631nm	130°	60mcd	2.0V	4,000 pcs per Reel
LTW-270TLA	InGaN White	Yellow	(0.30, 0.29)	130°	112mcd @ 10mA	3.2V	4,000 pcs per Reel

Side View Chip LED 1.6(L) x 1.15(W) x 0.4(H)mm

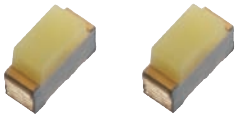

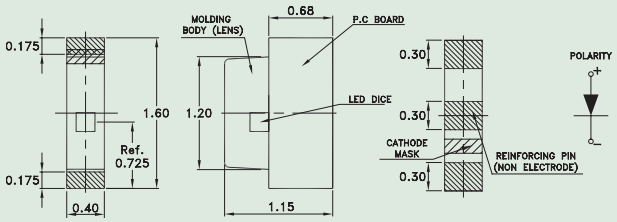

Part No.	Material	Lens Color	Wd	Viewing Angle 2 $\theta^{1/2}$*	I_V Typ. @ 20mA	V_F Typ. @ 20mA	Tape and Reel
LTST-S280TBKT	InGaN Blue	Water Clear	470nm	130°	50mcd	3.3V	4,000 pcs per Reel
LTST-S280TGKT	InGaN Pure Green	Water Clear	525nm	130°	150mcd	3.3V	4,000 pcs per Reel
LTST-S280KGKT	AlInGaP Yellow Green	Water Clear	571nm	130°	35mcd	2.0V	4,000 pcs per Reel
LTST-S280KSKT	AlInGaP Yellow	Water Clear	589nm	130°	50mcd	2.0V	4,000 pcs per Reel
LTST-S280KFKT	AlInGaP Orange	Water Clear	605nm	130°	90mcd	2.0V	4,000 pcs per Reel
LTST-S280KRKT	AlInGaP Red	Water Clear	631nm	130°	60mcd	2.0V	4,000 pcs per Reel
LTW-280DS5	InGaN White	Yellow	(0.30, 0.29)	130°	71mcd @ 5mA	2.9V	4,000 pcs per Reel

SMD LED

Side View Chip LED 1.8(L) x 1.1(W) x 0.3(H)mm

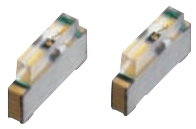

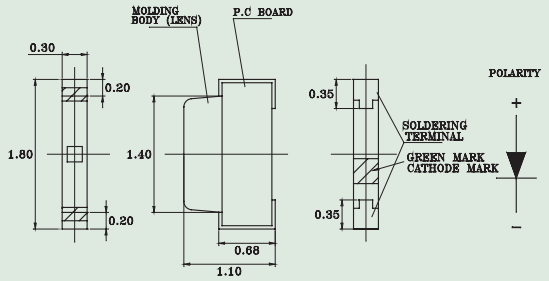

Part No.	Material	Lens Color	Wd	Viewing Angle 2 $\theta^{1/2}$*	I_V Typ. @ 5mA	V_F Typ. @ 5mA	Tape and Reel
LTST-S482TBKT-5A	InGaN Blue	Water Clear	470nm	130°	28mcd	2.9V	3,000 pcs per Reel
LTST-S482TGKT-5A	InGaN Pure Green	Water Clear	525nm	130°	90mcd	2.9V	3,000 pcs per Reel
LTST-S482KGKT-5A	AlInGaP Yellow Green	Water Clear	571nm	130°	12mcd	1.9V	3,000 pcs per Reel
LTST-S482KSKT-5A	AlInGaP Yellow	Water Clear	589nm	130°	22mcd	1.9V	3,000 pcs per Reel
LTST-S482KFKT-5A	AlInGaP Orange	Water Clear	605nm	130°	24mcd	1.9V	3,000 pcs per Reel
LTST-S482KRKT-5A	AlInGaP Red	Water Clear	631nm	130°	14mcd	1.9V	3,000 pcs per Reel
LTW-482DS5	InGaN White	Yellow	(0.30, 0.29)	130°	71mcd	2.9V	3,000 pcs per Reel

Side View Chip LED 1.8(L) x 1.1(W) x 0.4(H)mm

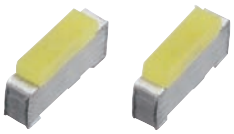

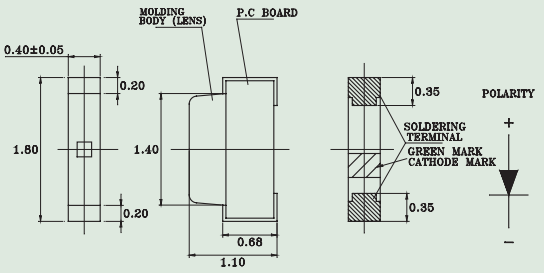

Part No.	Material	Lens Color	Wd	Viewing Angle 2 $\theta^{1/2}$*	I_V Typ. @ 5mA	V_F Typ. @ 5mA	Tape and Reel
LTST-S481TBKT-5A	InGaN Blue	Water Clear	470nm	130°	28mcd	2.9V	3,000 pcs per Reel
LTST-S481TGKT-5A	InGaN Pure Green	Water Clear	525nm	130°	90mcd	2.9V	3,000 pcs per Reel
LTST-S481KGKT-5A	AlInGaP Yellow Green	Water Clear	571nm	130°	12mcd	1.9V	3,000 pcs per Reel
LTST-S481KSKT-5A	AlInGaP Yellow	Water Clear	589nm	130°	22mcd	1.9V	3,000 pcs per Reel
LTST-S481KFKT-5A	AlInGaP Orange	Water Clear	605nm	130°	24mcd	1.9V	3,000 pcs per Reel
LTST-S481KRKT-5A	AlInGaP Red	Water Clear	631nm	130°	14mcd	1.9V	3,000 pcs per Reel
LTW-481DS5	InGaN White	Yellow	(0.30, 0.29)	130°	71mcd	2.9V	3,000 pcs per Reel

Side View Chip LED 1.8(L) x 1.1(W) x 0.5(H)mm

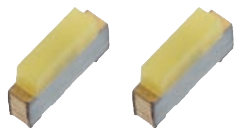

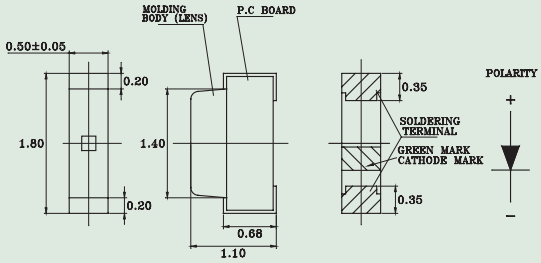

Part No.	Material	Lens Color	Wd	Viewing Angle 2 $\theta^{1/2}$*	I_V Typ. @ 5mA	V_F Typ. @ 5mA	Tape and Reel
LTST-S480TBKT-5A	InGaN Blue	Water Clear	470nm	130°	28mcd	2.9V	3,000 pcs per Reel
LTST-S480TGKT-5A	InGaN Pure Green	Water Clear	525nm	130°	90mcd	2.9V	3,000 pcs per Reel
LTST-S480KGKT-5A	AlInGaP Yellow Green	Water Clear	571nm	130°	12mcd	1.9V	3,000 pcs per Reel
LTST-S480KSKT-5A	AlInGaP Yellow	Water Clear	589nm	130°	22mcd	1.9V	3,000 pcs per Reel
LTST-S480KFKT-5A	AlInGaP Orange	Water Clear	605nm	130°	28mcd	1.9V	3,000 pcs per Reel
LTST-S480KRKT-5A	AlInGaP Red	Water Clear	631nm	130°	14mcd	1.9V	3,000 pcs per Reel
LTW-480DS5	InGaN White	Yellow	(0.30, 0.29)	130°	71mcd	2.9V	3,000 pcs per Reel

Reverse Mount 3.2(L) x 1.6(W) x 1.1(H)mm

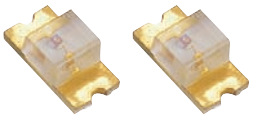

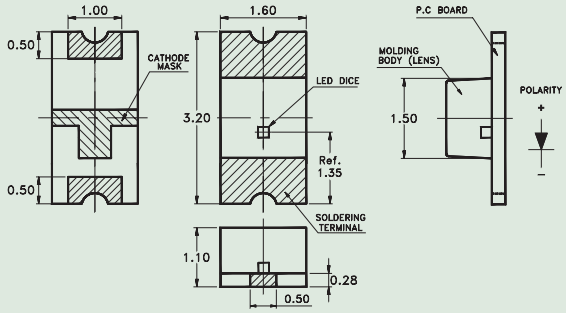

Part No.	Material	Lens Color	Wd	Viewing Angle 2 $\theta^{1/2}$*	I_V Typ. @ 20mA	V_F Typ. @ 20mA	Tape and Reel
LTST-C230TBKT	InGaN Blue	Water Clear	470nm	130°	50mcd	3.3V	3,000 pcs per Reel
LTST-C230TGKT	InGaN Pure Green	Water Clear	525nm	130°	150mcd	3.3V	3,000 pcs per Reel
LTST-C230KGKT	AlInGaP Yellow Green	Water Clear	571nm	130°	35mcd	2.0V	3,000 pcs per Reel
LTST-C230KSKT	AlInGaP Yellow	Water Clear	589nm	130°	50mcd	2.0V	3,000 pcs per Reel
LTST-C230KFKT	AlInGaP Orange	Water Clear	605nm	130°	90mcd	2.0V	3,000 pcs per Reel
LTST-C230KRKT	AlInGaP Red	Water Clear	631nm	130°	60mcd	2.0V	3,000 pcs per Reel
LTW-C230DS	InGaN White	Yellow	(0.30, 0.29)	130°	280mcd	3.3V	3,000 pcs per Reel
LTW-230ZDS5	InGaN White	Yellow	(0.30, 0.29)	130°	71mcd @ 5mA	2.9V	3,000 pcs per Reel

SMD LED

Reverse Mount 3.2(L) x 0.8(W) x 0.7(H)mm

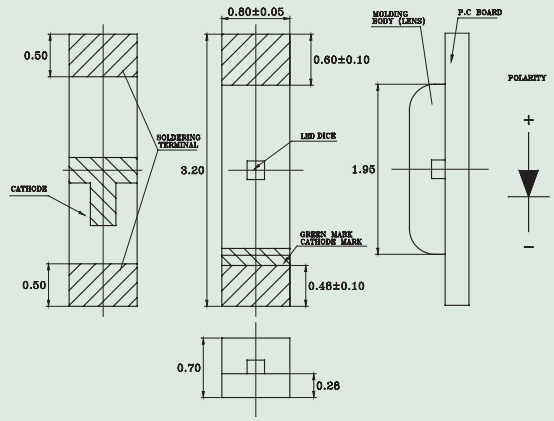

Part No.	Material	Lens Color	Wd	Viewing Angle 2 $\theta^{1}/_{2}$*	I_V Typ. @ 20mA	V_F Typ. @ 20mA	Tape and Reel
LTST-C231TBKT	InGaN Blue	Water Clear	470nm	130°	50mcd	3.3V	3,000 pcs per Reel
LTST-C231TGKT	InGaN Pure Green	Water Clear	525nm	130°	150mcd	3.3V	3,000 pcs per Reel
LTST-C231KGKT	AlInGaP Yellow Green	Water Clear	571nm	130°	35mcd	2.0V	3,000 pcs per Reel
LTST-C231KSKT	AlInGaP Yellow	Water Clear	589nm	130°	50mcd	2.0V	3,000 pcs per Reel
LTST-C231KFKT	AlInGaP Orange	Water Clear	605nm	130°	90mcd	2.0V	3,000 pcs per Reel
LTST-C231KRKT	AlInGaP Red	Water Clear	631nm	130°	60mcd	2.0V	3,000 pcs per Reel
LTW-C231DS	InGaN White	Yellow	(0.30, 0.29)	130°	112mcd	3.3V	3,000 pcs per Reel

Dom Lens 3.2(L) x 2.4(W) x 2.4(H)mm

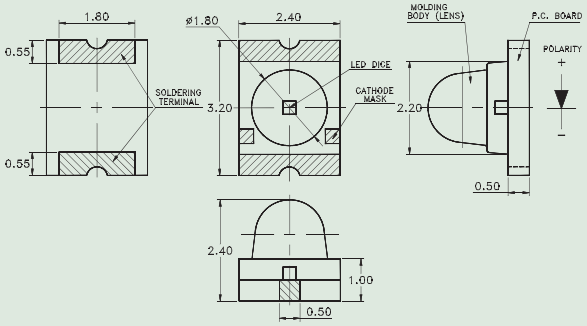

Part No.	Material	Lens Color	Wd	Viewing Angle 2 $\theta^{1}/_{2}$*	I_V Typ. @ 20mA	V_F Typ. @ 20mA	Tape and Reel
LTST-C930TBKT	InGaN Blue	Water Clear	470nm	130°	50mcd	3.3V	1,500 pcs per Reel
LTST-C930TGKT	InGaN Pure Green	Water Clear	525nm	130°	150mcd	3.3V	1,500 pcs per Reel
LTST-C930KGKT	AlInGaP Yellow Green	Water Clear	571nm	130°	35mcd	2.0V	1,500 pcs per Reel
LTST-C930KSKT	AlInGaP Yellow	Water Clear	589nm	130°	50mcd	2.0V	1,500 pcs per Reel
LTST-C930KFKT	AlInGaP Orange	Water Clear	605nm	130°	90mcd	2.0V	1,500 pcs per Reel
LTST-C930KRKT	AlInGaP Red	Water Clear	631nm	130°	60mcd	2.0V	1,500 pcs per Reel

Inner Lens 3.2(L) x 1.6(W) x 1.1(H)mm

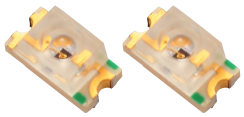

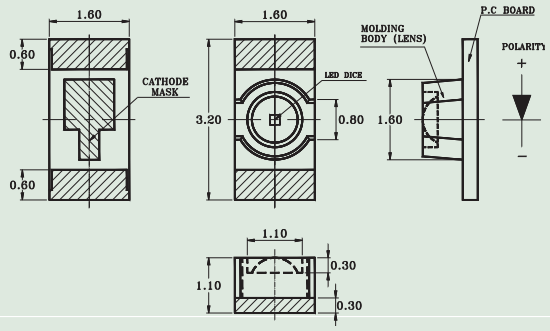

Part No.	Material	Lens Color	Wd	Viewing Angle 2 $\theta^{1}/_{2}$*	I_V Typ. @ 20mA	V_F Typ. @ 20mA	Tape and Reel
LTST-C21TBKT	InGaN Blue	Water Clear	470nm	70°	50mcd	3.3V	3,000 pcs per Reel
LTST-C21TGKT	InGaN Pure Green	Water Clear	525nm	70°	150mcd	3.3V	3,000 pcs per Reel
LTST-C21KGKT	AlInGaP Yellow Green	Water Clear	571nm	70°	35mcd	2.0V	3,000 pcs per Reel
LTST-C21KSKT	AlInGaP Yellow	Water Clear	589nm	70°	50mcd	2.0V	3,000 pcs per Reel
LTST-C21KFKT	AlInGaP Orange	Water Clear	605nm	70°	90mcd	2.0V	3,000 pcs per Reel
LTST-C21KRKT	AlInGaP Red	Water Clear	631nm	70°	60mcd	2.0V	3,000 pcs per Reel
LTW-21TS5	InGaN White	Yellow	(0.30, 0.29)	70°	71mcd @ 5mA	2.9V	3,000 pcs per Reel

Inner Lens 3.2(L) x 1.6(W) x 0.6(H)mm

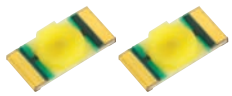

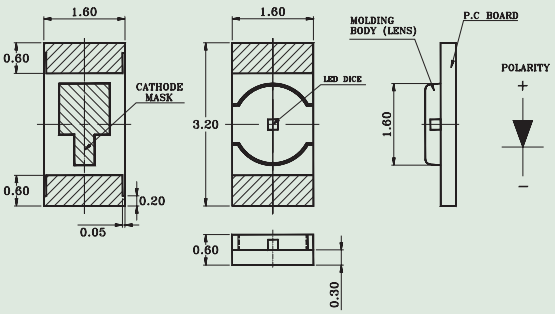

Part No.	Material	Lens Color	Wd	Viewing Angle 2 $\theta^{1}/_{2}$*	I_V Typ. @ 20mA	V_F Typ. @ 20mA	Tape and Reel
LTST-C216TBKT	InGaN Blue	Water Clear	470nm	130°	50mcd	3.3V	3,000 pcs per Reel
LTST-C216TGKT	InGaN Pure Green	Water Clear	525nm	130°	150mcd	3.3V	3,000 pcs per Reel
LTST-C216KGKT	AlInGaP Yellow Green	Water Clear	571nm	130°	35mcd	2.0V	3,000 pcs per Reel
LTST-C216KSKT	AlInGaP Yellow	Water Clear	589nm	130°	50mcd	2.0V	3,000 pcs per Reel
LTST-C216KFKT	AlInGaP Orange	Water Clear	605nm	130°	90mcd	2.0V	3,000 pcs per Reel
LTST-C216KRKT	AlInGaP Red	Water Clear	631nm	130°	60mcd	2.0V	3,000 pcs per Reel
LTW-216TS5	InGaN White	Yellow	(0.30, 0.29)	130°	60mcd @ 5mA	2.9V	3,000 pcs per Reel

SMD LED

Top View Chip LED Dual-Color 3.2(L) x 2.7(W) x 1.1(H)mm

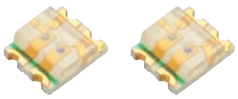

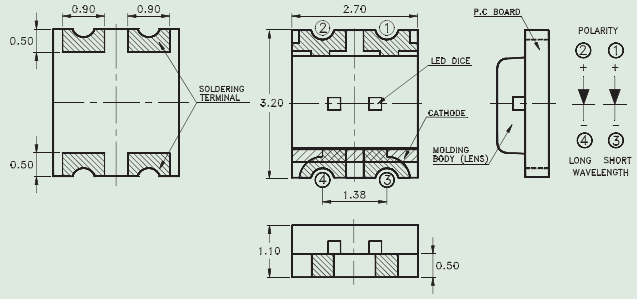

Part No.	Material	Lens Color	Wd	Viewing Angle 2 $\theta^{1}/_{2}$*	I_V Typ. @ 20mA	V_F Typ. @ 20mA	Tape and Reel
LTST-C155TBKFKT	Blue	Water Clear	470nm	130°	45mcd	3.3V	3,000 pcs per Reel
	Orange		605nm		95mcd	2.0V	
LTST-C155TBJSKT	Blue	Water Clear	470nm	130°	45mcd	3.3V	3,000 pcs per Reel
	Yellow		589nm		75mcd	2.0V	
LTST-C155KGKSKT	Green	Water Clear	571nm	130°	35mcd	2.0V	3,000 pcs per Reel
	Yellow		589nm		75mcd	2.0V	
LTST-C155KGJRKT	Green	Water Clear	571nm	130°	35mcd	2.0V	3,000 pcs per Reel
	Red		631nm		45mcd	2.0V	

Top View Chip LED Dual-Color 1.6(L) x 1.5(W) x 0.55(H)mm

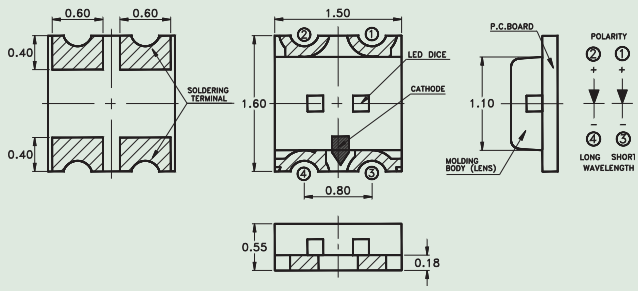

Part No.	Material	Lens Color	Wd	Viewing Angle 2 $\theta^{1}/_{2}$*	I_V Typ. @ 20mA	V_F Typ. @ 20mA	Tape and Reel
LTST-C195TBKFKT	Blue	Water Clear	470nm	130°	45mcd	3.3V	4,000 pcs per Reel
	Orange		605nm		90mcd	2.0V	
LTST-C195TBJSKT	Blue	Water Clear	470nm	130°	45mcd	3.3V	4,000 pcs per Reel
	Red		631nm		45mcd	2.0V	
LTST-C195KGKSKT	Green	Water Clear	571nm	130°	35mcd	2.0V	4,000 pcs per Reel
	Yellow		589nm		75mcd	2.0V	
LTST-C195KGJRKT	Green	Water Clear	571nm	130°	35mcd	2.0V	4,000 pcs per Reel
	Red		631nm		45mcd	2.0V	

Top View Chip LED Dual-Color 1.6(L) x 0.8(W) x 0.55(H)mm

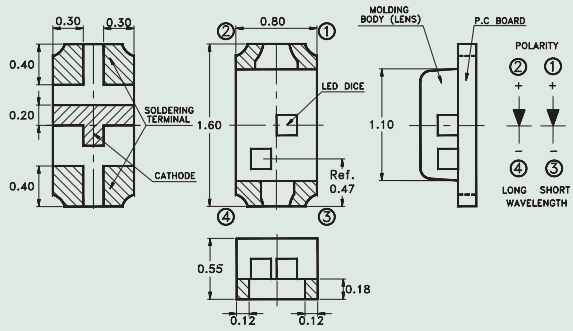

Part No.	Material	Lens Color	Wd	Viewing Angle 2 $\theta^{1/2}$*	I_V Typ. @ 20mA	V_F Typ. @ 20mA	Tape and Reel
LTST-C295TBKFKT	Blue	Water Clear	470nm	130°	55mcd	3.3V	4,000 pcs per Reel
	Orange		605nm		90mcd	2.0V	
LTST-C295TBKGKT	Blue	Water Clear	470nm	130°	45mcd	3.3V	4,000 pcs per Reel
	Green		571nm		35mcd	2.0V	
LTST-C295KGKSKT	Green	Water Clear	571nm	130°	35mcd	2.0V	4,000 pcs per Reel
	Yellow		589nm		75mcd	2.0V	
LTST-C295KGKRKT	Green	Water Clear	571nm	130°	35mcd	2.0V	4,000 pcs per Reel
	Red		631nm		45mcd	2.0V	

Reverse Mount Chip LED Dual-Color 3.2(L) x 1.6(W) x 1.1(H)mm

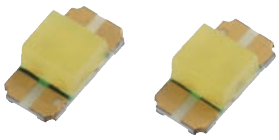

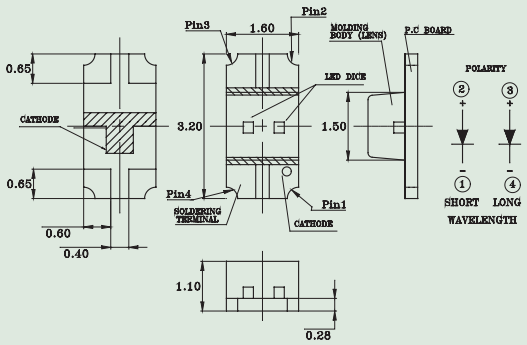

Part No.	Material	Lens Color	Wd	Viewing Angle 2 $\theta^{1/2}$*	I_V Typ. @ 20mA	V_F Typ. @ 20mA	Tape and Reel
LTST-C235TBKFKT	Blue	Water Clear	470nm	130°	50mcd	3.3V	3,000 pcs per Reel
	Orange		605nm		90mcd	2.0V	
LTST-C235TBKGKT	Blue	Water Clear	470nm	130°	50mcd	3.3V	3,000 pcs per Reel
	Green		571nm		50mcd	2.0V	
LTST-C235KGKSKT	Green	Water Clear	571nm	130°	35mcd	2.0V	3,000 pcs per Reel
	Yellow		589nm		50mcd	2.0V	
LTST-C235KGKRKT	Green	Water Clear	571nm	130°	35mcd	2.0V	3,000 pcs per Reel
	Red		631nm		60mcd	2.0V	

Side View Chip LED Dual-Color 3.2(L) x 1.5(W) x 1.0(H)mm

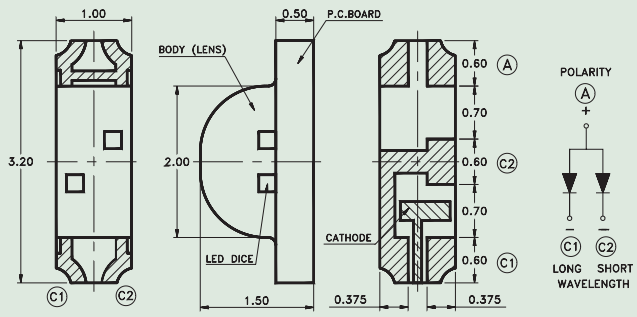

Part No.	Material	Lens Color	Wd	Viewing Angle 2 $\theta^{1/2}$*	I_V Typ. @ 20mA	V_F Typ. @ 20mA	Tape and Reel
LTST-S115KGJSKT	Green	Water Clear	571nm	130°	35mcd	2.0V	3,000 pcs per Reel
	Yellow		589nm		75mcd	2.0V	
LTST-S115KGJRKT	Green	Water Clear	571nm	130°	35mcd	2.0V	3,000 pcs per Reel
	Red		631nm		45mcd	2.0V	

Side View Chip LED Dual-Color 3.0(L) x 2.0(W) x 1.0(H)mm

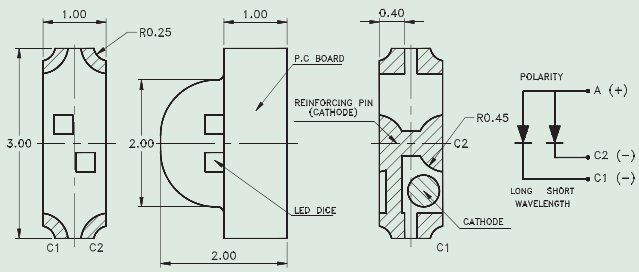

Part No.	Material	Lens Color	Wd	Viewing Angle 2 $\theta^{1/2}$*	I_V Typ. @ 20mA	V_F Typ. @ 20mA	Tape and Reel
LTST-S326KGJSKT	Green	Water Clear	571nm	130°	35mcd	2.0V	3,000 pcs per Reel
	Yellow		589nm		75mcd	2.0V	
LTST-S326KGJRKT	Green	Water Clear	571nm	130°	35mcd	2.0V	3,000 pcs per Reel
	Red		631nm		45mcd	2.0V	

Top View Chip LED Full-Color 1.6(L) x 2.1(W) x 0.55(H)mm

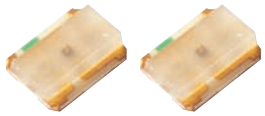

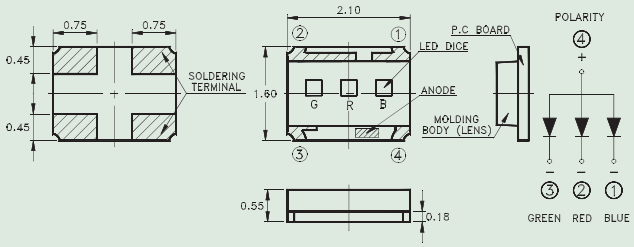

Part No.	Material	Lens Color	Wd	Viewing Angle 2 $\theta_{1/2}$*	I_V Typ. @ 20mA	V_F Typ. @ 20mA	Tape and Reel
LTST-C19FD1WT	Red	Water Diffused	605nm	130°	60mcd	2.2V	3,000 pcs per Reel
	Green		525nm		130mcd	3.3V	
	Blue		470nm		40mcd	3.3V	

Top View ChipLED Full-Color 1.6(L) x 2.1(W) x 0.4(H)mm

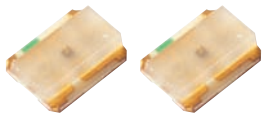

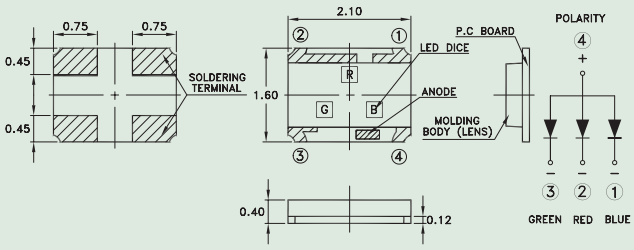

Part No.	Material	Lens Color	Wd	Viewing Angle 2 $\theta_{1/2}$*	I_V Typ. @ 20mA	V_F Typ. @ 20mA	Tape and Reel
LTST-C19GD2WT	Red	Water Diffused	626nm	130°	100mcd	2.0V	3,000 pcs per Reel
	Green		525nm		150mcd	3.3V	
	Blue		470nm		40mcd	3.3V	

SMD LED

Top View ChipLED Full-Color 1.6(L) x 1.6(W) x 0.35(H)mm

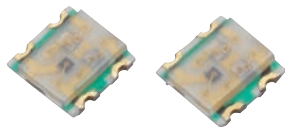

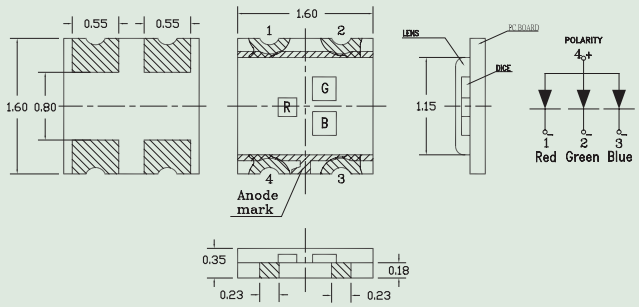

Part No.	Material	Lens Color	Wd	Viewing Angle 2 $\theta^{1}/_{2}$*	I_V Typ. @ 20mA	V_F Typ. @ 20mA	Tape and Reel
LTST-C19HE1WT	Red	Water Diffused	624nm	130°	90mcd	2.0V	3,000 pcs per Reel
	Green		525nm		200mcd	3.3V	
	Blue		470nm		50mcd	3.3V	

Side View ChipLED Full-Color 3.0(L) x 2.0(W) x1.0(H)mm

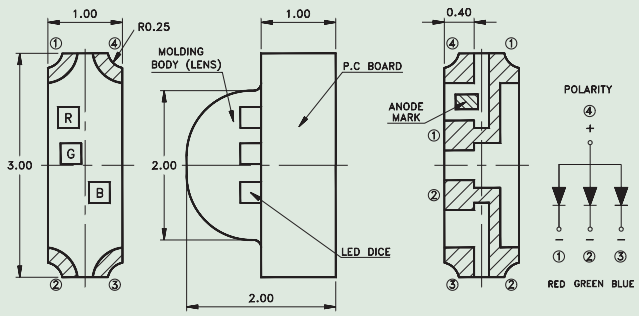

Part No.	Material	Lens Color	Wd	Viewing Angle 2 $\theta^{1}/_{2}$*	I_V Typ. @ 20mA	V_F Typ. @ 20mA	Tape and Reel
LTST-S32F1KT	Red	Water Clear	605nm	130°	120mcd	2.0V	3,000 pcs per Reel
	Green		525nm		150mcd	3.3V	
	Blue		470nm		60mcd	3.3V	

Side View ChipLED Full-Color 3.2(L) x 1.5(W) x1.0(H)mm

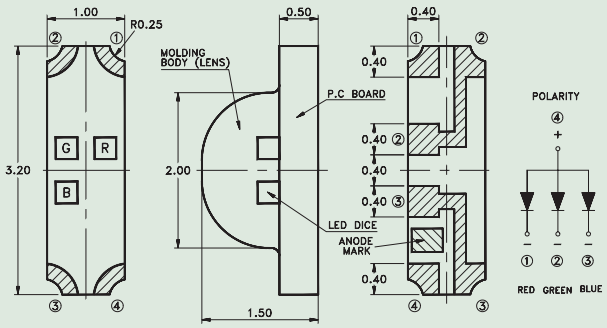

Part No.	Material	Lens Color	Wd	Viewing Angle 2 $\theta_{1/2}$*	I_V Typ. @ 20mA	V_F Typ. @ 20mA	Tape and Reel
LTST-S310F3WT	Red	Water Diffused	624nm	130°	60mcd	2.0V	3,000 pcs per Reel
	Green		525nm		130mcd	3.3V	
	Blue		470nm		40mcd	3.3V	

Application Note

CAUTIONS for SMD LED

1. Application

The LEDs described here are intended to be used for ordinary electronic equipment (such as office equipment, communication equipment and household applications). Consult Liteon's Sales in advance for information on applications in which exceptional reliability is required, particularly when the failure or malfunction of the LEDs may directly jeopardize life or health (such as in aviation, transportation, traffic control equipment, medical and life support systems and safety devices).

2. Storage

The storage ambient for the LEDs should not exceed 30°C temperature or 70% relative humidity. It is recommended that LEDs out of their original packaging are IR-reflowed within one week.

For extended storage out of their original packaging, it is recommended that the LEDs be stored in a sealed container with appropriate desiccant, or in a desiccator with nitrogen ambient.

LEDs stored out of their original packaging for more than a week should be baked at about 60 deg C for at least 24 hours before solder assembly.

3. Cleaning

Use alcohol-based cleaning solvents such as isopropyl alcohol to clean the LED if necessary

4. Soldering

IR Reflow Soldering		Wave soldering		Soldering iron	
Pre-Haet	120~150°C	Pre-heat	100°C Max.	Temperature	300°C Max.
Pre-heat time	120 sec. Max.	Pre-heat time	60 sec. Max.	Soldering time	3 sec. Max.
Peak temperature	240°C Max.	Solder wave	260°C Max.		(one time only)
Soldering time	10 sec. Max.	Soldering time	10 sec. Max.		

5. Drive Method

An LED is a current-operated device. In order to ensure intensity uniformity on multiple LEDs connected in parallel in an application, it is recommended that a current limiting resistor be incorporated in the drive circuit, in series with each LED as shown in Circuit A below.

Circuit model A

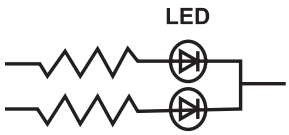

Circuit model B

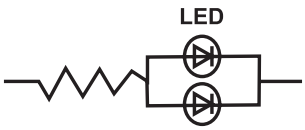

(A) Recommended circuit
(B) The brightness of each LED might appear different due to the differences in the I-V characteristics of those LEDs

6. ESD (Electrostatic Discharge)

Static Electricity or power surge will damage the LED.

Suggestions to prevent ESD damage:

- ■Use a conductive wrist band or anti- electrostatic glove when handling these LEDs
- ■All devices, equipment, and machinery must be properly grounded
- ■Work tables, storage racks, etc. should be properly grounded
- ■Use ion blower to neutralize the static charge which might have built up on surface of the LED's plastic lens as a result of friction

Application Note

between LEDs during storage and handling

ESD-damaged LEDs will exhibit abnormal characteristics such as high reverse leakage current, low forward voltage, or "no lightup" at low currents. To verify for ESD damage, check for "lightup" and Vf of the suspect LEDs at low currents.

The Vf of "good" LEDs should be >2.0V@0.1mA for InGaN product and >1.4V@0.1mA for AlInGaP product.

Chip ESD level	Machine Model	Human Body Model
InGaN/Sapphire	100V	300V
AlInGaP	200V	500V
InGaN/SiC	600V	1000V

Suggested checking list :

Training and Certification

1. Everyone working in a static-safe area is ESD-certified?
2. Training records kept and re-certification dates monitored?

Static-Safe Workstation & Work Areas

1. Static-safe workstation or work-areas have ESD signs?
2. All surfaces and objects at all static-safe workstation and within 1 ft measure less than 100V?
3. All ionizer activated, positioned towards the units?
4. Each work surface mats grounding is good?

Personnel Grounding

1. Every person (including visitors) handling ESD sensitive (ESDS) items wears wrist strap, heel strap or conductive shoes with conductive flooring?
2. If conductive footwear used, conductive flooring also present where operator stand or walk?
3. Garments, hairs or anything closer than 1 ft to ESD items measure less than 100V*?
4. Every wrist strap or heel strap/conductive shoes checked daily and result recorded for all DLs?
5. All wrist strap or heel strap checkers calibration up to date?

Note: *50V for Blue LED.

Device Handling

1. Every ESDS items identified by EIA-471 labels on item or packaging?
2. All ESDS items completely inside properly closed static-shielding containers when not at static-safe workstation?
3. No static charge generators (e.g. plastics) inside shielding containers with ESDS items?
4. All flexible conductive and dissipative package materials inspected before reuse or recycles?

Others

1. Audit result reported to entity ESD control coordinator?
2. Corrective action from previous audits completed?
3. Are audit records complete and on file?

Application Note

7. Reliability Test

Classification	Test Item	Test Condition	Reference Standard
Endurance Test	Operation Life	Ta = Under Room Temperature as Per Data Sheet Maximum Rating. *Test Time = 1000HRS (-24HRS, +72HRS)*@20mA	MIL-STD-750D : 1026 MIL-STD-883D : 1005 JIS C 7021 : B-1
	High Temperature High Humidity Storage	IR-Reflow In-Board, 2 Times Ta = 65 ± 5°C, RH = 90 ~ 95% *Test Time = 240HRS ± 2HRS	MIL-STD-202F: 103B JIS C 7021 : B-11
	High Temperature Storage	Ta = 105 ± 5°C *Test Time = 1000HRS (-24HRS, +72HRS)	MIL-STD-883D : 1008 JIS C 7021 : B-10
	Low Temperature Storage	Ta = -55 ± 5°C *Test Time = 1000HRS (-24HRS, +72HRS)	JIS C 7021 : B-12
Environmental Test	Temperature Cycling	105°C ~ 25°C ~ -55°C ~ 25°C 30mins 5mins 30mins 5mins (10 cycles)	MIL-STD-202F : 107D MIL-STD-750D : 1051 MIL-STD-883D : 1010 JIS C 7021 : A-4
	Thermal Shock	IR-Reflow In-Board, 2 Times 85°C ± 5°C ~ -40°C ± 5°C 10mins 10mins (10 cycles)	MIL-STD-202F : 107D MIL-STD-750D : 1051 MIL-STD-883D : 1011
	Solder Resistance	T.sol = 260 ± 5°C Dwell Time = 10 ± 1secs	MIL-STD-202F : 210A MIL-STD-750D : 2031 JIS C 7021 : A-1
	IR-Reflow Normal Process	Ramp-up rate(183°C to Peak) +3°C/second max Temp. maintain at 125(± 25)°C 120 seconds max Temp. maintain above 183°C 60-150 seconds Peak temperature range 235°C+5/-0°C Time within 5°C of actual Peak Temperature (tp) 10-30 seconds Ramp-down rate +6°C/second max	MIL-STD-750D:2031.2 J-STD-020C
	IR-Reflow Pb Free Process	Ramp-up rate(217°C to Peak) +3°C/second max Temp. maintain at 175(± 25)°C 180 seconds max Temp. maintain above 217°C 60-150 seconds Peak temperature range 260°C+5/-0°C Time within 5°C of actual Peak Temperature (tp) 20-40 seconds Ramp-down rate +6°C/second max	MIL-STD-750D:2031.2 J-STD-020C
	Solderability	T.sol = 230 ± 5°C Immersion time 2 ± 0.5 sec Immersion rate 25 ± 0.5 mm/sec Coverage ≥ 95% of the dipped surface	MIL-STD-202F : 208D MIL-STD-750D : 2026 MIL-STD-883D : 2003 JIS C 7021 : A-2

8. Others

The appearance and specifications of the product may be modified for improvement, without prior notice.

High Power LED

Power LED is an energy efficient and ultra compact new light source, combing the lifetime and reliability advantages of Light Emitting Diode (LED) with the brightness of conventional lighting.

The power LED Emitter is a kind of power LED package which is a point light source with more energy efficient than incandescent and most halogen lamps. It gives you total design freedom and unmatched brightness, creating a new opportunities for solid state lighting to displace conventional lighting technologies.

Power LED Emitters can be purchased in reels for high volume assembly. For high volume applicatons, custom power LED source are available upon request, to meet you specific needs.

High Power LED

1W / 3W / 5W Emitter (P01 Series)

14.5 x 8.0 x 5.6 (mm)

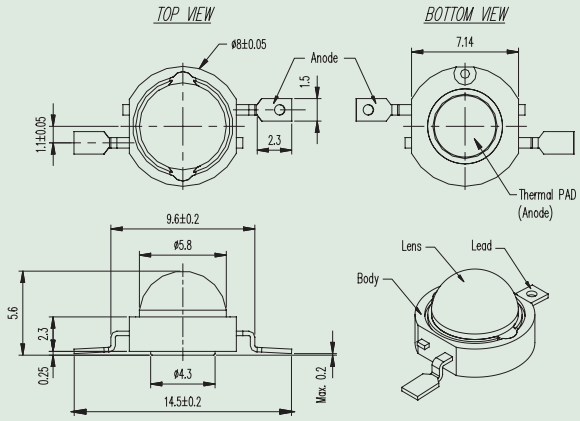

Part No.	Luminous Flux Bin	Color	Lens Color	Typical Luminous Flux (lm)			$R_{th\ (j-e)}$ (°C/W)	Typical Viewing Angle	Typical Forward Voltage @ 350mA(V)
				@350mA	@700mA	@1000mA			
LTPL-P011A	-	Amber (590nm)	Water Clear	38	-	-	5	140°	2.3
LTPL-P011B	-	Blue (465nm)	Water Clear	14	-	-	9	130°	3.7
LTPL-P011C	-	Cyan (505nm)	Water Clear	50	-	-	9	140°	3.7
LTPL-P011G	-	Green (525nm)	Water Clear	65	-	-	9	140°	3.7
LTPL-P011H	-	Red-Orange (617nm)	Water Clear	38	-	-	5	130°	2.3
LTPL-P011R	-	Red (625nm)	Water Clear	38	-	-	5	130°	2.3
LTPL-P011MS	-	Warm White (3000K)	Water Clear	38	-	-	9	120°	3.7
LTPL-P011NS	-	Neutral White (4000K)	Water Clear	52	-	-	9	120°	3.7
LTPL-P011WS	S0	Cool White (5500K)	Water Clear	59	-	-	9	120°	3.7
LTPL-P011WS	T1	Cool White (5500K)	Water Clear	72			9	120°	3.7
LTPL-P013MS	S0	Warm White (3000K)	Water Clear	59	94		6.5	120°	3.2
LTPL-P013NS	S0	Neutral White(4000K)	Water Clear	59	94		6.5	120°	3.2
LTPL-P013NS	T1	Neutral White(4000K)	Water Clear	72	115		6.5	120°	3.2
LTPL-P013NS	T2	Neutral White (4000K)	Water Clear	82	131		6.5	120°	3.2
LTPL-P013WS	T1	Cool White (5500K)	Water Clear	72	122		6.5	120°	3.2
LTPL-P013WS	T2	Cool White (5500K)	Water Clear	82	140		6.5	120°	3.2
LTPL-P013WS	U1	Cool White (5500K)	Water Clear	94	159		6.5	120°	3.2
LTPL-P013WS	U2	Cool White (5500K)	Water Clear	107	182		6.5	120°	3.2
LTPL-P014MS	S0	Warm White (3000K)	Water Clear	59	103	130	6	120°	3.4
LTPL-P014NS	T1	Neutral White (4000K)	Water Clear	72	129	165	6	120°	3.4
LTPL-P014NS	T2	Neutral White (4000K)	Water Clear	82	148	189	6	120°	3.4
LTPL-P014WS	T2	Cool White (5500K)	Water Clear	82	148	189	6	120°	3.4
LTPL-P014WS	U1	Cool White (5500K)	Water Clear	94	169	215	6	120°	3.4
LTPL-P014WS	U2	Cool White (5500K)	Water Clear	107	192	246	6	120°	3.4

1W / 3W / 5W COB (C02 Series)

4.49 x 3.05 x 1.975 (mm)

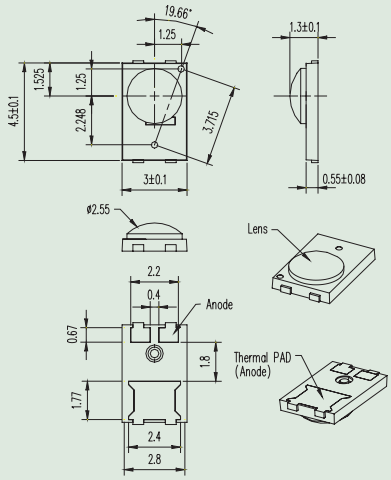

Part No.	Luminous Flux Bin	Color	Lens Color	Typical Luminous Flux (lm)			$R_{th\ (j-e)}$ (°C/W)	Typical Viewing Angle	Typical Forward Voltage @ 350mA(V)
				@350mA	@700mA	@1000mA			
LTPL-C021A	-	Amber (590nm)	Water Clear	38	-	-	7.5	140°	2.3
LTPL-C021B	-	Blue (465nm)	Water Clear	14	-	-	11.5	130°	3.7
LTPL-C021C	-	Cyan (505nm)	Water Clear	50	-	-	11.5	140°	3.7
LTPL-C021G	-	Green (525nm)	Water Clear	65	-	-	11.5	140°	3.7
LTPL-C021H	-	Red-Orange (617nm)	Water Clear	38	-	-	7.5	130°	2.3
LTPL-C021R	-	Red (625nm)	Water Clear	38	-	-	7.5	130°	2.3
LTPL-C021MS	-	Warm White (3000K)	Water Clear	38	-	-	11.5	120°	3.7
LTPL-C021NS	-	Neutral White (4000K)	Water Clear	52	-	-	11.5	120°	3.7
LTPL-C021WS	S0	Cool White (5500K)	Water Clear	59	-	-	11.5	120°	3.7
LTPL-C021WS	T1	Cool White (5500K)	Water Clear	72			11.5	120°	3.7
LTPL-C023MS	S0	Warm White (3000K)	Water Clear	59	94		9	120°	3.2
LTPL-C023NS	S0	Neutral White(4000K)	Water Clear	59	94		9	120°	3.2
LTPL-C023NS	T1	Neutral White(4000K)	Water Clear	72	115		9	120°	3.2
LTPL-C023NS	T2	Neutral White (4000K)	Water Clear	82	131		9	120°	3.2
LTPL-C023WS	T1	Cool White (5500K)	Water Clear	72	122		9	120°	3.2
LTPL-C023WS	T2	Cool White (5500K)	Water Clear	82	140		9	120°	3.2
LTPL-C023WS	U1	Cool White (5500K)	Water Clear	94	159		9	120°	3.2
LTPL-C023WS	U2	Cool White (5500K)	Water Clear	107	182		9	120°	3.2
LTPL-C024MS	S0	Warm White (3000K)	Water Clear	59	103	130	8.5	120°	3.4
LTPL-C024NS	T1	Neutral White (4000K)	Water Clear	72	129	165	8.5	120°	3.4
LTPL-C024NS	T2	Neutral White (4000K)	Water Clear	82	148	189	8.5	120°	3.4
LTPL-C024WS	T2	Cool White (5500K)	Water Clear	82	148	189	8.5	120°	3.4
LTPL-C024WS	U1	Cool White (5500K)	Water Clear	94	169	215	8.5	120°	3.4
LTPL-C024WS	U2	Cool White (5500K)	Water Clear	107	192	246	8.5	120°	3.4

High Power LED

0.5W Power LED (P00 Series)

5.4 x 5.0 x 1.2 (mm)

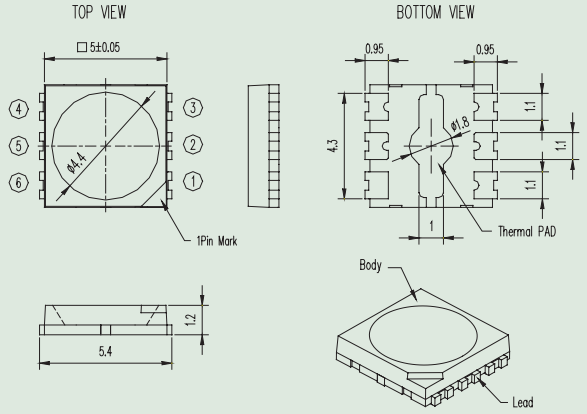

Part No.	Color	Lens Color	Typical Luminous Flux (lm)			$R_{th\ (J-A)}$ (°C/W)	Typical Viewing Angle	Typical Forward Voltage @ 40*2mA(V)	Typical Forward Voltage @ 75*2mA(V)	Typical Forward Voltage @ 150mA(V)
			@40*2 mA	@75*2 mA	@150 mA					
LTPL-P00DWS	Cool White (6000K)	N/A	21	37	-	50	120°	3.0	3.2	-
LTPL-P00DNS	Neutral White (3750K)	N/A	17	29	-	50	120°	3.0	3.2	-
LTPL-P00DMS	Warm White (2850K)	N/A	16	27	-	50	120°	3.0	3.2	-
LTPL-P00SWS	Cool White (6000K)	N/A	-	-	42	50	120°	-	-	3.1
LTPL-P00SVS	Cool White (6000K)	N/A	-	-	36	50	120°	-	-	3.1
LTPL-P00SNS	Neutral White (3750K)	N/A	-	-	33	50	120°	-	-	3.1
LTPL-P00SMS	Warm White (2850K)	N/A	-	-	30	50	120°	-	-	3.1

Power Flash LED (C01 Series)

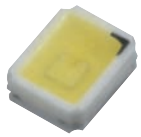

2.04 x 1.64 x 0.7 (mm)

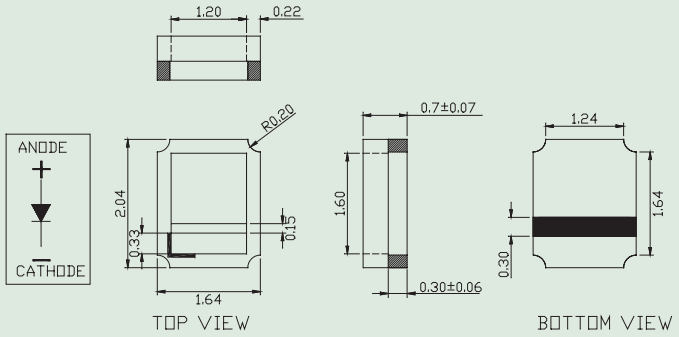

Part No.	Color	Lens Color	Typical Luminous Flux (lm)				$R_{th\ (j-e)}$ (°C/W)	Typical Viewing Angle	Typical Forward Voltage @ 350mA(V)
			@175mA	@350mA	@700mA	@1000mA			
LTPL-C011W	Cool White (6500K)	N/A	27	46	-	-	22	120°	3.5
LTPL-C013W	Cool White (6500K)	N/A	25	42	72	93	22	120°	3.5
LTPL-C014W	Cool White (6500K)	N/A	37	63	110	141	22	120°	3.3

Application Note

Cautions for Power LED

Storage

- The storage ambient should not exceed 30°C temperature or 70% relative humidity.
- For extended storage out of their original packaging, it is recommended that the LEDs be stored in a sealed container with appropriate desiccant, or in a desiccators with nitrogen ambient.
- It is recommended that LEDs out of their original packaging are soldered within 4 weeks.
- LEDs stored out of their original packaging for more than 4 weeks should be baked at about 60 deg C for at least 24 hours before solder assembly.

Assemble Consideration

This section provides you the requirements to mount LTPL Emitters onto Metal Core Printed Circuit Board (MCPCB) for optimal heat-dissipation efficiency, for reliable operations of your products and for the optimal performance you need.

- **Design rules during LTPL Emitter array and its assembly procedure**

  1. Thermal resistance from the LTPL Emitters to the ambient environment must be kept at minimum level as possible.Any heat barrier will prevent LTPL Emitters from running at optimum light output performance.
  2. Electrical insulation between the contacts other than electros of LTPL Emitters and the MCPCB is required. The exposed metal part of a LTPL Emitters is not electrically neutral. Do not electrically connect this area to any electrical traces or pads on your MCPCB.
  3. If you want to minimize thermal resistance between LTPL Emitters and your MCPCB, use thermally conductive adhesive in-between.
  4. LTPL Emitters can be soldered in infrared (IR), hot bar soldering, fiber focused IR, or hand soldering.

- **MCPCB Selection**

  To select a suitable MCPCB is the first step in assemble LTPL emitters. A MCPCB consists of several layers that provide both electrical connections and a low thermal resistance path to external heat sinks applied. Standard LTPL Emitter arrays use aluminates MCPCB that consists of the following layers:

  1. Aluminum Base (type:1050, thickness:1.5 ± 0.1 mm)
  2. Electrical Insulation Layer (Dielectric/Epoxy thickness: 100 μm)
  3. Copper Layer (Copper thickness: 35 μm)
  4. Solder Mask (Solder paste thickness after reflow process: 90 ~ 115 μm)

Soldering Process

Followings are a recommend process flows to build LTPL Emitters into Power Light Sources. Please mount entire respective surface mount devices (SMD), if any, on your MCPCB designated before LTPL Emitters assembly process.

- **For Reflow Process**

  Reflow soldering temperature profile

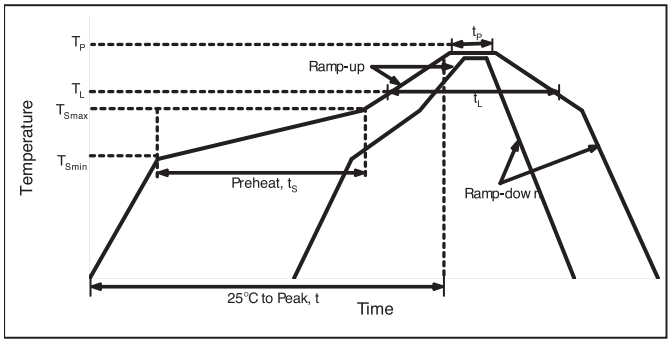

Profile Feature	Lead Free Assembly
Average Ramp-Up Rate (T_{Smax} to T_P)	3°C / second max
Preheat Temperature Min (T_{Smin})	150°C
Preheat Temperature Max (T_{Smax})	200°C
Preheat Time (t_{Smin} to t_{Smax})	60 – 180 seconds
Time Maintained Above Temperature (T_L)	217°C
Time Maintained Above Time (t_L)	60 – 150 seconds
Peak / Classification Temperature (T_P)	260°C
Time Within 5°C of Actual Peak Temperature (t_P)	5 seconds
Ramp – Down Rate	6°C / second max
Time 25°C to Peak Temperature	8 minutes max

Application Note

For Hot Bar

Step 1 Dispense Thermal Conductive Agent and Solder Flux

Use solder flux for good heat transfer during soldering of the LTPL Emitter terminals to reduce required soldering time. Note that the spread of flux compound should be restricted to the solder pad areas. You may want to optimize your soldering process by adjusting the amount of flux.

Step 2 Placement of LTPL Emitter

It is recommended to use automated pick-and-place equipment to place LTPL Emitters onto MCPCB. The pick-and-place mechanism shall not touch the lens or the leads of LTPL Emitters.

Step 3 Soldering the Electrical Leads by Hot bar Soldering

This process will help transfer heat only on to the leads and solder pad areas and therefore avoid damaging emitter body. To transfer sufficient heat from hot bars to device-leads, it is strongly recommended that the following process parameters must be considered: 1) Amount of flux dispensed onto solder pads, 2) Pressing force of hot bar tips, and 3) Hot bar temperature.

Step 4 Curing for Thermal Conductive Agent

Please follow the curing instructions set forth by manufacturers for the chosen thermal conductive agent.

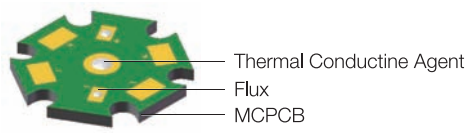

1

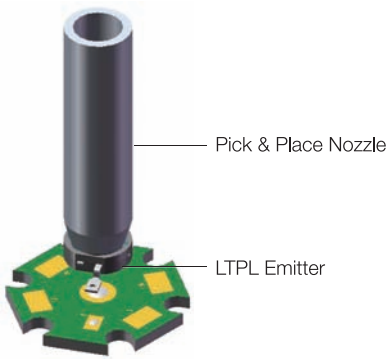

2

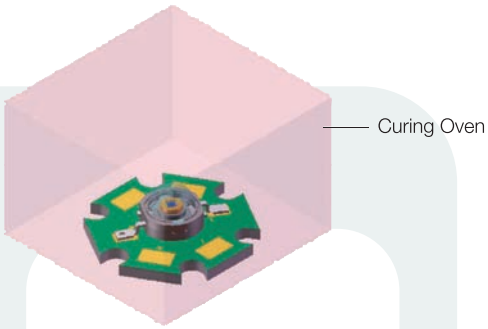

4

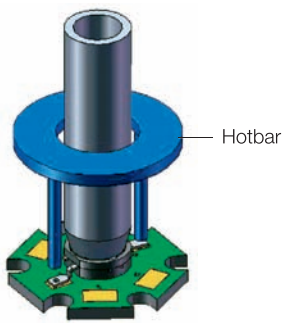

3

For Manual Soldering Iron

When manual hand soldering is concerned, it is recommended to hand solder the leads with a solder-tip temperature of 290°C for less than 3 seconds and at least 2 seconds or more intervals during each solder. Furthermore, avoid damaging the emitter or the epoxy layer on MCPCB.

Application Note

Thermal Consideration

Thermal Resistance of LTPL Emitter

Thermal resistance(R_{TH}) is one of the primary tools used in thermal management design. It is defined as the ratio of temperature difference to the corresponding power dissipation. The overall $R_{TH, J-A}$ (Junction-Ambient) of a LTPL Emitter plus MCPCB is illustrated as follow:

$R_{TH, J-A}$ (°C/W) = ΔT_{J-A} / Pd ..... (1)

Where

$\Delta T_{J-A} = T_{Junction} - T_{Ambient}$ (°C)

Pd (Power dissipated, W) = Forward current (I_F) x Forward voltage (V_F)

In addition, heat generated at the junction of semiconductor die travels along the following path to ambient environment: junction-to-case, case-to-board, board-to-ambient air.

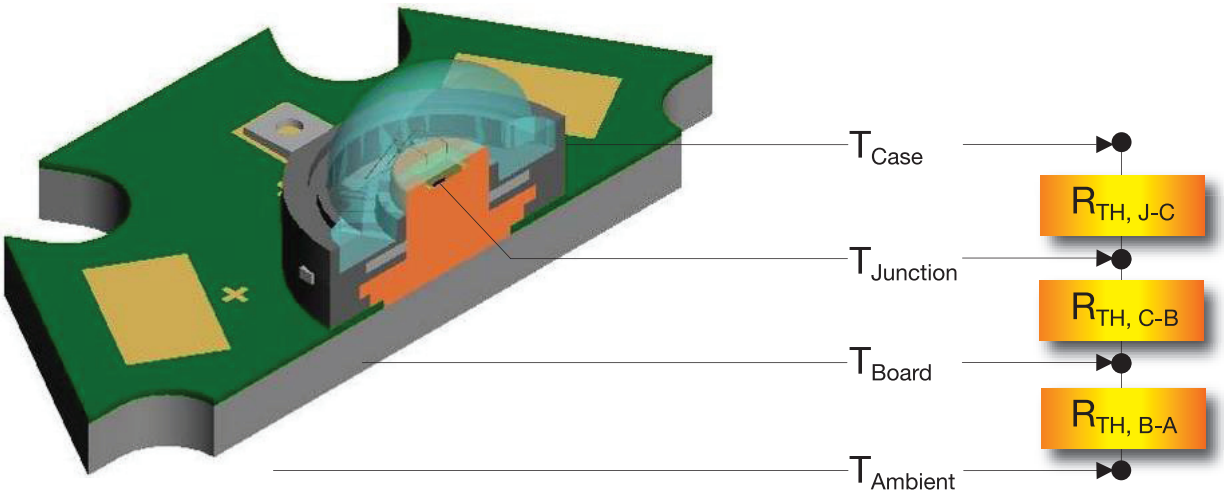

Figure 1. Thermal Resistance in Series

The overall thermal resistance therefore can be expressed as the sum of each individual resistance along above heat-travel path:

$R_{TH, J-A} = R_{TH, J-C} + R_{TH, C-B} + R_{TH, B-A}$ ..... (2)

As ΔT_{J-A} = (Pd) x ($R_{TH, J-A}$) from Equation 1, we have

$T_{Junction} = T_{Ambient}$ + (Pd) x ($R_{TH, J-A}$) ..... (3)

Based on Equation 3. $T_{Junction}$ can be obtained if $T_{Ambient}$, Pd and $R_{TH, J-A}$ are determined.

To increase light output efficiency of LEDs, one must increase the dissipation of heat generated by LEDs; in other words, to reduce thermal resistance from LEDs to ambient environment Lite-On has optimized the junction-to-board thermal path of LTPL Emitters to minimize the overall thermal resistance ($R_{TH, J-B}$) down to 12°C/W.

Application Note

Thermal Resistance of Multiple LTPL Emitter

The overall thermal resistance of multiple LTPL Emitters describing your specific application needs can be determined by using parallel thermal resistance model as shown in Figure 2

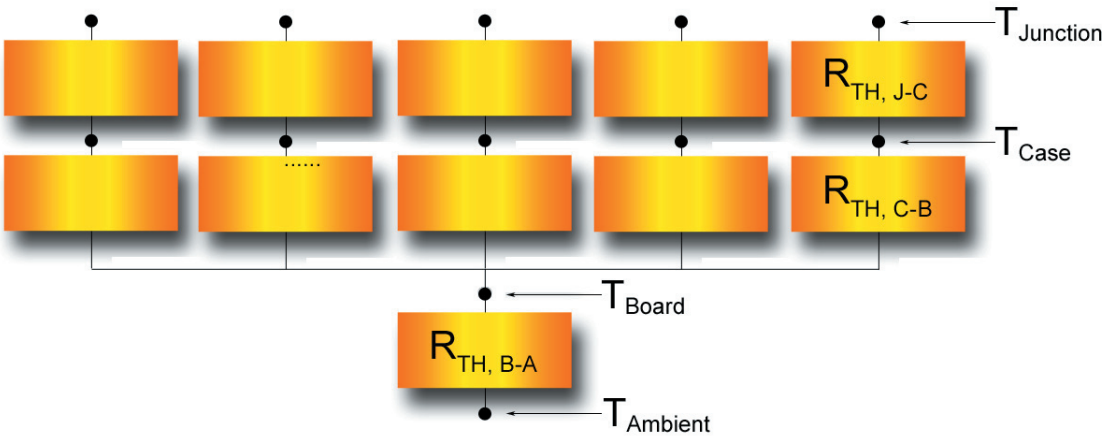

Figure 2. Thermal Resistance Model of Multiple LTPL

By using the parallel resistance equation we can obtain $R_{TH,\ J\text{-}B}$ of above array:

$$\frac{1}{\text{Overall } R_{TH,\ J\text{-}B}} = \frac{1}{\text{LED}_1\ R_{TH,\ J\text{-}B}} + \frac{1}{\text{LED}_2\ R_{TH,\ J\text{-}B}} + \ldots + \frac{1}{\text{LED}_n\ R_{TH,\ J\text{-}B}} \quad \ldots\ldots (4)$$

Assuming all the parallel resistances are of the same, Equation 4. then becomes:

$$\frac{1}{\text{Overall } R_{TH,\ J\text{-}B}} = \frac{n}{\text{LED}_x\ R_{TH,\ J\text{-}B}} \quad \ldots\ldots (5)$$

or

$$\text{Overall } R_{TH,\ J\text{-}B} = \frac{\text{LED}_x\ R_{TH,\ J\text{-}B}}{n} \quad \ldots\ldots (6)$$

Where

n = Total number of LTPL Emitters in above system

In this case the $T_{Junction}$ of a multi LTPL Emitter system can be described as follow :

$$T_{Junction} = T_{Ambient} + (P_{d_Total}) \times (\text{Overall}_R_{TH,\ J\text{-}A}) \quad \ldots\ldots (7)$$

Where

P_{d_Total} = Total power (W) dissipated from emitter system

$$\text{Overall}_R_{TH,\ J\text{-}A} = \text{Overall}_R_{TH,\ J\text{-}B} + R_{TH,\ B\text{-}A} \quad \ldots\ldots (8)$$

It is strongly recommended that the maximum T Board of LTPL Emitter be considered under 90 °C even for short durations while designing the thermal model for your specific applications.

Application Note

ESD

Static Electricity or power surge will damage the LED. Suggestions to prevent ESD damage :

1. Use of a conductive wrist band or anti-electrostatic glove when handling these LEDs.
2. All devices, equipment, and machinery must be properly grounded
3. Work tables, storage racks, etc. should be properly grounded.
4. Use ion blower to neutralize the static charge which might have built up on surface of the LED's plastic lens as a result of friction between LEDs during storage and handling.

ESD-damaged LEDs will exhibit abnormal characteristics such as high reverse leakage current, low forward voltage, or “no lightup” at low currents.To verify for ESD damage, check for “lightup” and VF of the suspect LEDs at low currents.

Through Hole LED

Through Hole LED from Lite-On are available in T1 (3ϕ), T1 $^{3}/_{4}$ (5ϕ), and oval packages spanning the visible spectrum range from Red to Blue. Standard applications include indicator lights for instrumentation, computer peripherals, and consumer products.

Lite-On's recently introduced ultra-bright family of LED lamps utilizing high efficiency AlInGaP chips are finding widespread use in applications such as indoor/outdoor signs (monochrome), traffic and pedestrian signals, and for automotive interior/exterior illumination. The high luminous efficiency and solid-state robustness of these LED lamps provide a distinct advantage in terms of power savings, long-term reliability, and end-product styling features and flexibility when compared to incandescent lamps.

Through Hole LED

High Brightness LED

3mm round, T1

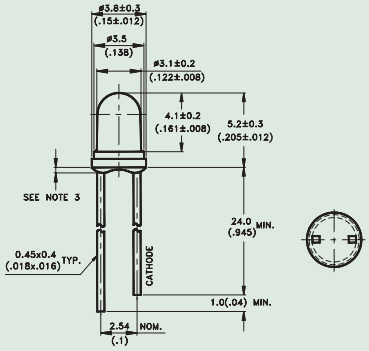

Part No.	Material	Lens Color	Wd	Typical Viewing Angle 2 θ1/2*	Luminous Intensity Iv Typ. @ 20mA	VF Typ. @ 20mA
LTL1CHTBK5	InGaN Blue	Water Clear	470nm	30°	880 mcd	3.5V
LTL1CHTGK5	InGaN Pure Green	Water Clear	525nm	30°	3200 mcd	3.5V
LTL1CHKGKNN	AlInGaP Yellow Green	Water Clear	572nm	45°	310 mcd	2.1V
LTL1CHKSKNN	AlInGaP Yellow	Water Clear	587nm	45°	310 mcd	2.1V
LTL1CHKFKNN	AlInGaP Amber	Water Clear	605nm	45°	310 mcd	2.1V
LTL1CHKRKNN	AlInGaP Super Red	Water Clear	631nm	45°	210 mcd	2.1V

High Brightness LED

3mm round, T1

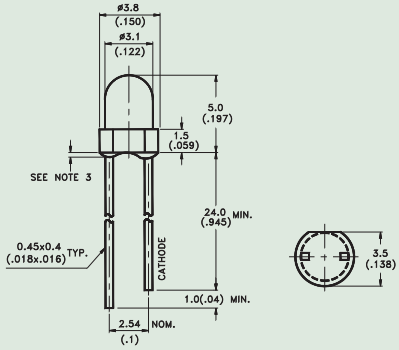

Part No.	Material	Lens Color	Wd	Typical Viewing Angle 2 θ1/2*	Luminous Intensity Iv Typ. @ 20mA	VF Typ. @ 20mA
LTL1KHTBK5	InGaN Blue	Water Clear	470nm	50°	310 mcd	3.5V
LTL1KHTGT6	InGaN Pure Green	Green Transparent	525nm	50°	1500 mcd	3.8V
LTL1KH6GD	AlInGaP Yellow Green	Green Diffused	572nm	75°	140 mcd	2.1V
LTL1KH6YT	AlInGaP Yellow	Yellow Transparent	592nm	75°	310 mcd	2.1V
LTL1KH6FK	AlInGaP Amber	Water Clear	605nm	75°	880 mcd	2.1V
LTL-1KHCE	AlInGaP Super Red	Red Transparent	631nm	75°	40 mcd	2.1V

High Brightness LED

3mm round, T1

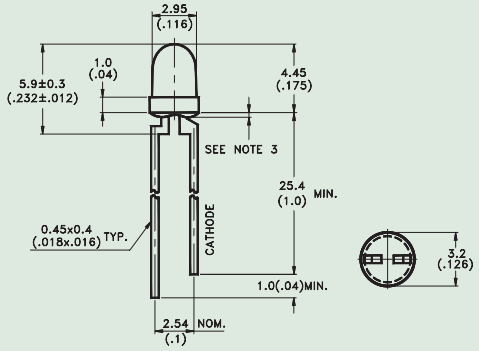

Part No.	Material	Lens Color	Wd	Typical Viewing Angle 2 θ1/2*	Luminous Intensity Iv Typ. @ 20mA	VF Typ. @ 20mA
LTL42TB6N	InGaN Blue	Water Clear	470nm	45°	310 mcd	3.5V
LTL42TG6N	InGaN Pure Green	Water Clear	530nm	45°	1500 mcd	3.8V
LTL42NKGKNN	AlInGaP Yellow Green	Water Clear	572nm	56°	180 mcd	2.1V
LTL42NKSKNN	AlInGaP Yellow	Water Clear	592nm	56°	310 mcd	2.1V
LTL42NKFKNN	AlInGaP Amber	Water Clear	605nm	56°	310 mcd	2.1V
LTL42NKRKNN	AlInGaP Super Red	Water Clear	631nm	56°	180 mcd	2.1V
LTW-42NC5	White	Water Clear	0.33, 0.33	45°	1100 mcd	3.5V
LTW-420C5	White	Water Clear	0.33, 0.33	25°	2600 mcd	3.5V

High Brightness LED

5mm oval, parallel

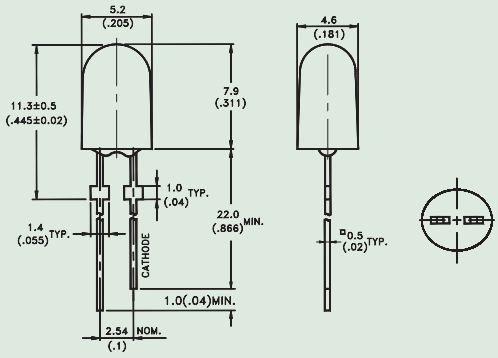

Part No.	Material	Lens Color	Wd	Typical Viewing Angle 2 θ1/2*	Luminous Intensity Iv Typ. @ 20mA	VF Typ. @ 20mA
LTL5L3CBDS5	InGaN Blue	Blue Diffused	470nm	70°/35°	520 mcd	3.5V
LTL5L3CGDS7	InGaN Pure Green	Green Diffused	530nm	70°/35°	190 mcd	3.5V
LTL5L3BSDS	AlInGaP Yellow	Yellow Diffused	589nm	70°/35°	1500 mcd	2.1V
LTL5L3UEDS	AlInGaP Red	Red Diffused	624nm	70°/35°	1500 mcd	2.1V

Through Hole LED

High Brightness LED

5mm round, T3/4

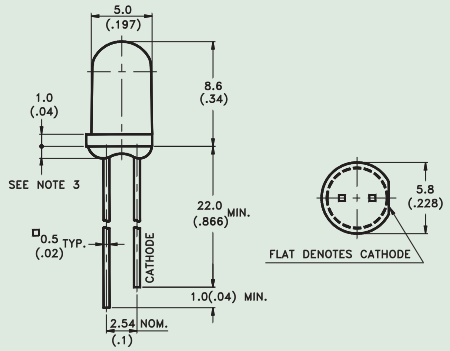

Part No.	Material	Lens Color	Wd	Typical Viewing Angle 2 $\theta_{1/2}$*	Luminous Intensity I_V Typ. @ 20mA	V_F Typ. @ 20mA
LTL2F3WFK	AlInGaP Amber	Water Clear	615nm	10°	27000 mcd	2.1V
LTL2P3TBK5	InGaN Blue	Water Clear	470nm	15°	2500 mcd	3.5V
LTL2P3TGK	InGaN Pure Green	Water Clear	525nm	15°	7000 mcd	3.5V
LTL2H3KGKNN	AlInGaP Yellow Green	Water Clear	572nm	15°	1500 mcd	2.1V
LTL2H3SYK	AlInGaP Yellow	Water Clear	592nm	15°	5500 mcd	2.25V
LTL2H3VFKNT	AlInGaP Amber	Water Clear	605nm	15°	3400 mcd	2.1V
LTL2H3SEK	AlInGaP Super Red	Water Clear	631nm	15°	6350 mcd	2.25V
LTL2T3TBK5	InGaN Blue	Water Clear	470nm	30°	1500 mcd	3.5V
LTL2V3TCK7	InGaN Bluish Green	Water Clear	503nm	30°	4200 mcd	3.6V
LTL2T3TGK6	InGaN Pure Green	Water Clear	530nm	30°	5500 mcd	3.5V
LTL2R3KGKNN	AlInGaP Yellow Green	Water Clear	572nm	30°	680 mcd	2.1V
LTL2R3SYK	AlInGaP Yellow	Water Clear	592nm	30°	6300 mcd	2.25V
LTL2R3VFKNT	AlInGaP Amber	Water Clear	605nm	30°	1900 mcd	2.1V
LTL2R3SEK	AlInGaP Super Red	Water Clear	630nm	30°	3700 mcd	2.25V
LTW-2S3D8	White	Water Clear	0.33, 0.33	15°	17000 mcd	3.3V
LTW-2R3D7	White	Water Clear	0.33, 0.33	35°	4200 mcd	3.4V
LTW-2L3C7S	White	Water Clear	0.33, 0.33	50°	2500 mcd	3.2V
LTW-2N3D7	White	Water Clear	0.33, 0.33	56°	2500 mcd	3.5V

High Brightness LED

3mm round dual color common cathode, T1

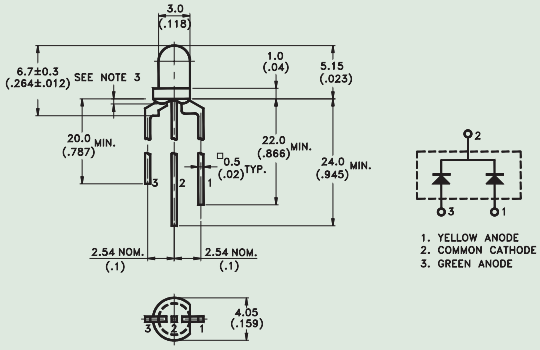

Part No.	Material	Lens Color	Wd	Typical Viewing Angle 2 $\theta^1/_2$*	Luminous Intensity I_V Typ. @ 20mA	V_F Typ. @ 20mA
LTL1BEUBFJ	InGaN Blue	White Diffused	470nm	30°	30 mcd	3.5V
	AlInGaP Amber		605nm		520 mcd	2.1V
LTL1BECBYJ4	InGaN Blue	White Diffused	470nm	30°	310 mcd	3.5V
	AlInGaP Yellow		592nm		520 mcd	2.1V
LTL1BEKVJNN	AlInGaP Green	White Diffused	572nm	30°	110 mcd	2.1V
	AlInGaP Red		631nm		110 mcd	2.1V

High Brightness LED

5mm round dual color common cathode, T1$^3/_4$

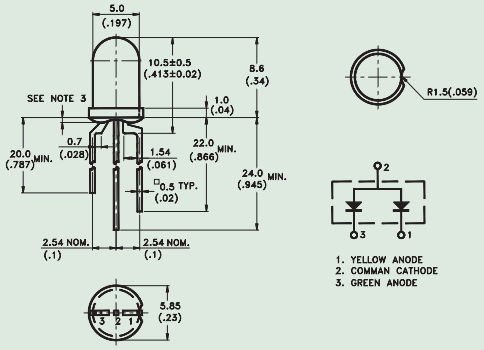

Part No.	Material	Lens Color	Wd	Typical Viewing Angle 2 $\theta^1/_2$*	Luminous Intensity I_V Typ. @ 20mA	V_F Typ. @ 20mA
LTL30ECBKRJ	InGaN Blue	White Diffused	470nm	25°	240 mcd	3.5V
	AlInGaP Red		631nm		310 mcd	2.1V
LTL30ECBYJ	InGaN Blue	White Diffused	470nm	30°	50 mcd	3.5V
	AlInGaP Yellow		592nm		110 mcd	2.1V
LTL30E4VJ	AlInGaP Green	White Diffused	572nm	30°	680 mcd	2.1V
	AlInGaP Orange Red		615nm		400 mcd	2.1V

Through Hole LED

High Brightness LED

3mm oval, parallel

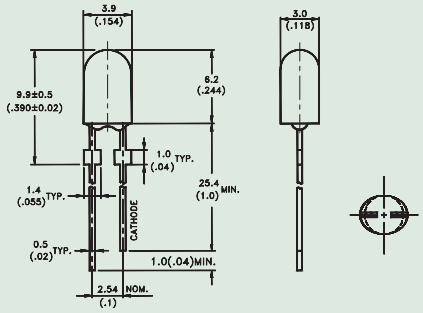

Part No.	Material	Lens Color	Wd	Typical Viewing Angle 2 θ1/2*	Luminous Intensity Iv Typ. @ 20mA	VF Typ. @ 20mA
LTL3H3CBS5	InGaN Blue	Blue Diffused	470nm	110°/50°	470 mcd	3.5V
LTL3H3TBDS	InGaN Blue	Blue Diffused	470nm	110°/50°	200 mcd	3.5V
LTL3H3CGS7	InGaN Pure Green	Green Diffused	530nm	110°/50°	1500 mcd	3.5V
LTL3H3TGDS	InGaN Pure Green	Green Diffused	530nm	110°/50°	1300 mcd	3.5V
LTL3H3BSDS	AlInGaP Yellow	Yellow Diffused	590nm	120°/60°	400 mcd	2.1V
LTL3H3TRDS	AlInGaP Red	Red Diffused	624nm	110°/50°	880 mcd	2.1V

High Brightness LED

4mm oval, parallel

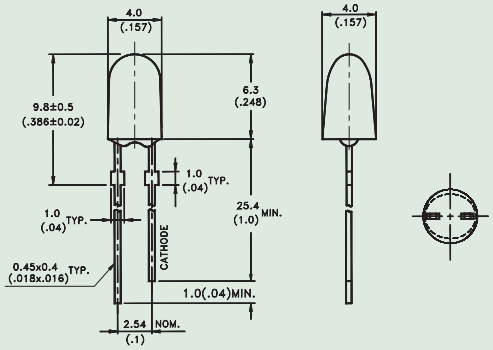

Part No.	Material	Lens Color	Wd	Typical Viewing Angle 2 θ1/2*	Luminous Intensity Iv Typ. @ 20mA	VF Typ. @ 20mA
LTL4HMYSJS	AlInGaP Yellow	White Diffused	589nm	110°/55°	680 mcd	2.1V
LTL4HMYSDS	AlInGaP Yellow	Yellow Diffused	592nm	110°/55°	680 mcd	2.1V
LTL4HMSRS	AlInGaP Super Red	Red Diffused	630nm	120°/60°	680 mcd	2.25V

High Brightness LED

5mm oval, parallel

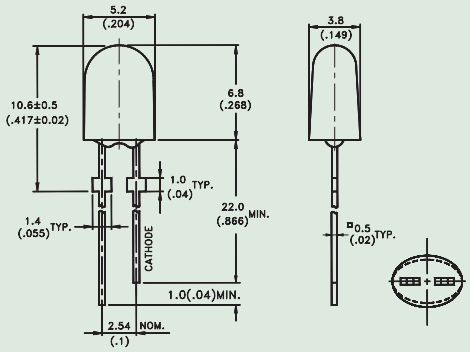

Part No.	Material	Lens Color	Wd	Typical Viewing Angle 2 θ1/2*	Luminous Intensity Iv Typ. @ 20mA	VF Typ. @ 20mA
LTL5H3CBS5	InGaN Blue	Blue Diffused	470nm	110°/50°	430 mcd	3.5V
LTL5H3TBDS	InGaN Blue	Blue Diffused	470nm	110°/50°	250 mcd	3.5V
LTL5H3CGDS7	InGaN Pure Green	Green Diffused	530nm	110°/50°	1450 mcd	3.5V
LTL5H3TGDS	InGaN Pure Green	Green Diffused	530nm	110°/50°	1300 mcd	3.5V
LTL5H3BSDS	AlInGaP Yellow	Yellow Diffused	589nm	100°/40°	880 mcd	2.1V
LTL5H3TRDS	AlInGaP Red	Red Diffused	625nm	110°/50°	1020 mcd	2.1V

High Brightness LED

4mm oval, perpendicalar

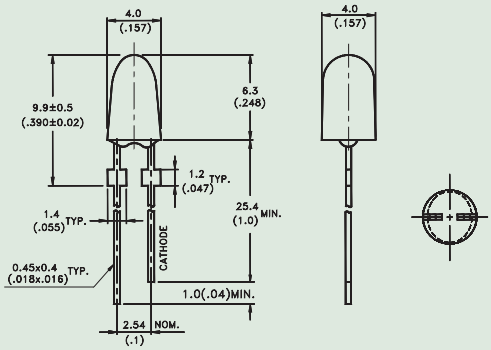

Part No.	Material	Lens Color	Wd	Typical Viewing Angle 2 θ1/2*	Luminous Intensity Iv Typ. @ 20mA	VF Typ. @ 20mA
LTL4VMSRS	AlInGaP Super Red	Red Diffused	630nm	120°/60°	680 mcd	2.25V
LTL4VMSSS	AlInGaP Yellow	Yellow Diffused	590nm	120°/60°	520 mcd	2.25V

Through Hole LED

Piranha LED

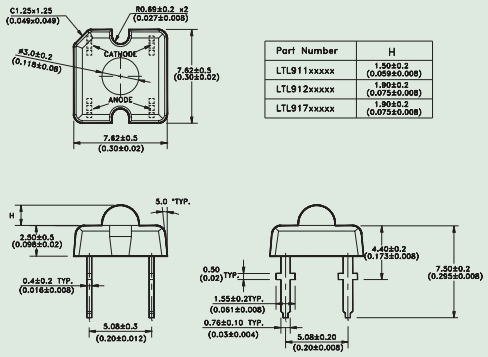

Part No.	Material	Lens Color	Wd	Typical Viewing Angle 2 $\theta^{1}/_{2}$*	Luminous Intensity I_V Typ. @ 70mA	V_F Typ. @ 20mA
LTL911CBKS5	InGaN Blue	Water Clear	470nm	60°	800 mlm	4.3V
LTL911CGKS7	InGaN Pure Green	Water Clear	525nm	60°	2400 mlm	4.3V
LTL911SYKSA	AlInGaP Yellow	Water Clear	594nm	90°	2090 mlm	2.5V
LTL911SEKSA	AlInGaP Red	Water Clear	631nm	90°	3750 mlm	2.5V
LTL912CBKS5	InGaN Blue	Water Clear	470nm	45°	800 mlm	4.3V
LTL912CGKS7	InGaN Pure Green	Water Clear	525nm	45°	2400 mlm	4.3V
LTL912SYKSA	AlInGaP Yellow	Water Clear	594nm	60°	2090 mlm	2.5V
LTL912S13HKS	AlInGaP Red Orange	Water Clear	615nm	60°	5000 mlm	2.5V
LTL912SEKSA	AlInGaP Super Red	Water Clear	631nm	60°	3750 mlm	2.5V
LTL917SYKS	AlInGaP Yellow	Water Clear	596nm	40°	2000 mlm	2.5V
LTL917SHKS	AlInGaP Red Orange	Water Clear	615nm	40°	3750 mlm	2.5V
LTL917SEKS	AlInGaP Red	Water Clear	630nm	40°	3750 mlm	2.5V

Application Note

CAUTIONS for Through-Hole LED Lamps

1. Application

The LEDs described here are intended to be used for ordinary electronic equipment (such as office equipment, communication equipment and household applications). Consult Liteon's Sales in advance for information on applications in which exceptional reliability is required, particularly when the failure or malfunction of the LEDs may directly jeopardize life or health (such as in aviation, transportation, traffic control equipment, medical and life support systems and safety devices).

2. Storage

The storage ambient for the LEDs should not exceed 30°C temperature or 70% relative humidity. It is recommended that LEDs out of their original packaging are used within three months.

For extended storage out of their original packaging, it is recommended that the LEDs be stored in a sealed container with appropriate desiccant or in a desiccator with nitrogen ambient.

3. Cleaning

Use alcohol-based cleaning solvents such as isopropyl alcohol to clean the LEDs if necessary.

4. Lead Forming & Assembly

During lead forming, the leads should be bent at a point at least 3mm from the base of LED lens. Do not use the base of the leadframe as a fulcrum during forming.

Lead forming must be done before soldering, at normal temperature.

During assembly on PCB, use minimum clinch force possible to avoid excessive mechanical stress.

5. Soldering

When soldering, leave a minimum of 2mm clearance from the base of the lens to the soldering point. Dipping the lens into the solder must be avoided.

Do not apply any external stress to the lead frame during soldering while the LED is at high temperature.

Recommended soldering conditions :

Soldering iron		Wave soldering	
Temperature Soldering time	300°C Max. 3 sec. Max. (one time only)	Pre-heat Pre-heat time Solder wave Soldering time	100°C Max. 60 sec. Max. 260°C Max. 5 sec. Max

Note: Excessive soldering temperature and/or time might result in deformation of the LED lens or catastrophic failure of the LED

6. Drive Method

An LED is a current-operated device. In order to ensure intensity uniformity on multiple LEDs connected in parallel in an application, it is recommended that a current limiting resistor be incorporated in the drive circuit, in series with each LED as shown in Circuit A below.

Circuit model A

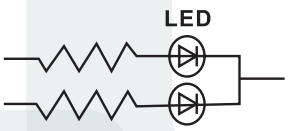

Circuit model B

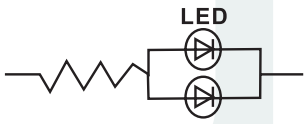

(A) Recommended circuit
(B) The brightness of each LED might appear different due to the differences in the I-V characteristics of those LEDs

Application Note

7. ESD (Electrostatic Discharge)

Static Electricity or power surge will damage the LED.

Suggestions to prevent ESD damage:

- Use a conductive wrist band or anti- electrostatic glove when handling these LEDs
- All devices, equipment, and machinery must be properly grounded
- Work tables, storage racks, etc. should be properly grounded
- Use ion blower to neutralize the static charge which might have built up on surface of the LED's plastic lens as a result of friction between LEDs during storage and handling

ESD-damaged LEDs will exhibit abnormal characteristics such as high reverse leakage current, low forward voltage, or "no lightup" at low currents. To verify for ESD damage, check for "lightup" and Vf of the suspect LEDs at low currents.

The Vf of "good" LEDs should be >2.0V@0.1mA for InGaN product and >1.4V@0.1mA for AlInGaP product.

Suggested checking list :

Training and Certification

1. Everyone working in a static-safe area is ESD-certified?
2. Training records kept and re-certification dates monitored?

Static-Safe Workstation & Work Areas

1. Static-safe workstation or work-areas have ESD signs?
2. All surfaces and objects at all static-safe workstation and within 1 ft measure less than 100V?
3. All ionizer activated, positioned towards the units?
4. Each work surface mats grounding is good?

Personnel Grounding

1. Every person (including visitors) handling ESD sensitive (ESDS) items wears wrist strap, heel strap or conductive shoes with conductive flooring?
2. If conductive footwear used, conductive flooring also present where operator stand or walk?
3. Garments, hairs or anything closer than 1 ft to ESD items measure less than 100V*?
4. Every wrist strap or heel strap/conductive shoes checked daily and result recorded for all DLs?
5. All wrist strap or heel strap checkers calibration up to date?

Note: *50V for Blue LED.

Device Handling

1. Every ESDS items identified by EIA-471 labels on item or packaging?
2. All ESDS items completely inside properly closed static-shielding containers when not at static-safe workstation?
3. No static charge generators (e.g. plastics) inside shielding containers with ESDS items?
4. All flexible conductive and dissipative package materials inspected before reuse or recycles?

Others

1. Audit result reported to entity ESD control coordinator?
2. Corrective action from previous audits completed?
3. Are audit records complete and on file?

Application Note

8. Reliability Test

Classification	Test Item	Test Condition	Reference Standard
Endurance Test	Operation life	Ta = Under room temperature as per data sheet maximum rating *Test time = 1000hrs (-24hrs, +72hrs)	MIL-STD-750D : 1026 (1995) MIL-STD-883D : 1005 (1991) JIS C 7021 : B-1 (1982)
	High Temperature High Humidity Storage	Ta = 65 ± 5°C RH = 90 ~ 95% Test time = 240hrs ± hrs	MIL-STD-202F: 103B(1980) JIS C 7021 : B-11(1982)
	High Temperature Storage	Ta = 105 ± 5°C Test time = 1000hrs (-24hrs, +72hrs)	MIL-STD-883D : 1008 (1991) JIS C 7021 : B-10 (1982)
	Low Temperature Storage	Ta = -55 ± 5°C Test time = 1000hrs (-24hrs, +72hrs)	JIS C 7021 : B-12 (1982)
Environmental Test	Temperature Cycling	105°C ~ 25°C ~ -55°C ~ 25°C 30mins 5mins 30mins 5mins 10 cycles	MIL-STD-202F : 107D (1980) MIL-STD-750D : 1051(1995) MIL-STD-883D : 1010 (1991) JIS C 7021 : A-4(1982)
	Thermal Shock	105°C ± 5°C ~ -55°C ± 5°C 10mins 10mins 10 cycles	MIL-STD-202F : 107D(1980) MIL-STD-750D : 1051(1995) MIL-STD-883D : 1011 (1991)
	Solder Resistance	T.sol = 260 ± 5°C Dwell time = 10 ± 1secs	MIL-STD-202F : 210A(1980) MIL-STD-750D : 2031(1995) JIS C 7021 : A-1(1982)
	Solderability	T.sol = 230 ± 5°C Dwell time = 5 ± 1secs	MIL-STD-202F : 208D(1980) MIL-STD-750D : 2026(1995) MIL-STD-883D : 2003(1991) JIS C 7021 : A-2(1982)

Application Note

9. LED Lamps in Tape and Reel

Outline	Option Code	Description
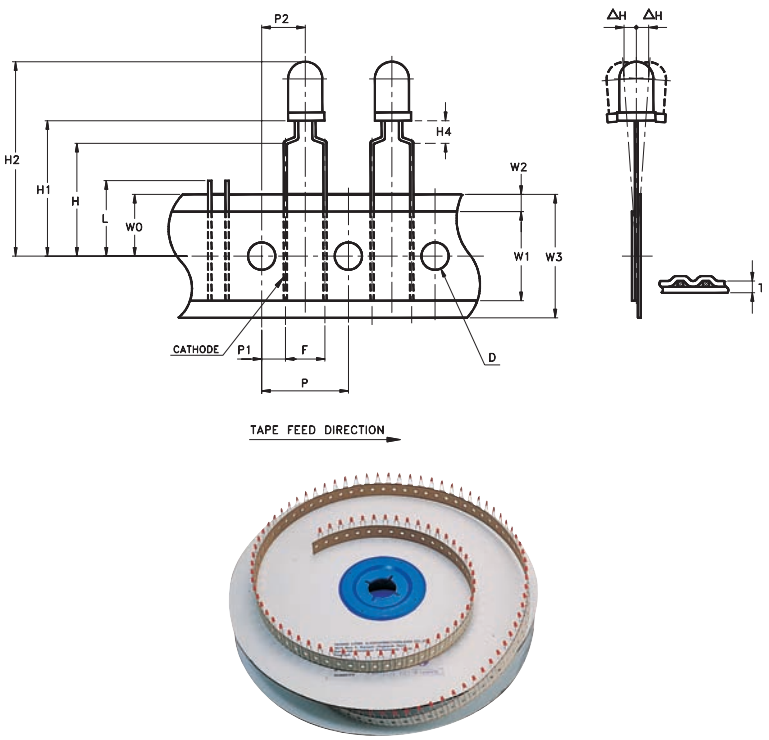	-001 -011 -021 -031 -041 -051 -061 -071 -081 -091 -0A1 -0B1 -0C1 -0D1 -0F1 -0G1 -0H1 -0K1 -0L1 -0M1 -0N1 -0P1	5mm(0.197") Preformed Leads with H_4=2.5mm(0.098") H_4=4.0mm(0.157") H_4=7.5mm(0.295") H_4=10.0mm(0.394") H_4=6.5mm(0.256") H_4=5.8mm(0.228") H_4=6.2mm(0.244") H_4=3.5mm(0.138") H_4=4.5mm(0.177") H_4=7.7mm(0.303") H_4=8.3mm(0.327") H_4=9.75mm(0.384") H_4=2.8mm(0.110") H_4=8.8mm(0.346") H_4=9.0mm(0.354") H_4=5.0mm(0.197") H_4=11.0mm(0.433") H_4=5.4mm(0.213") H_4=9.4mm(0.370") H_4=10.4mm(0.409") H_4=7.2mm(0.283") H_4=5.2mm(0.205") H_4:from Seating Plane to Bottom of Component.
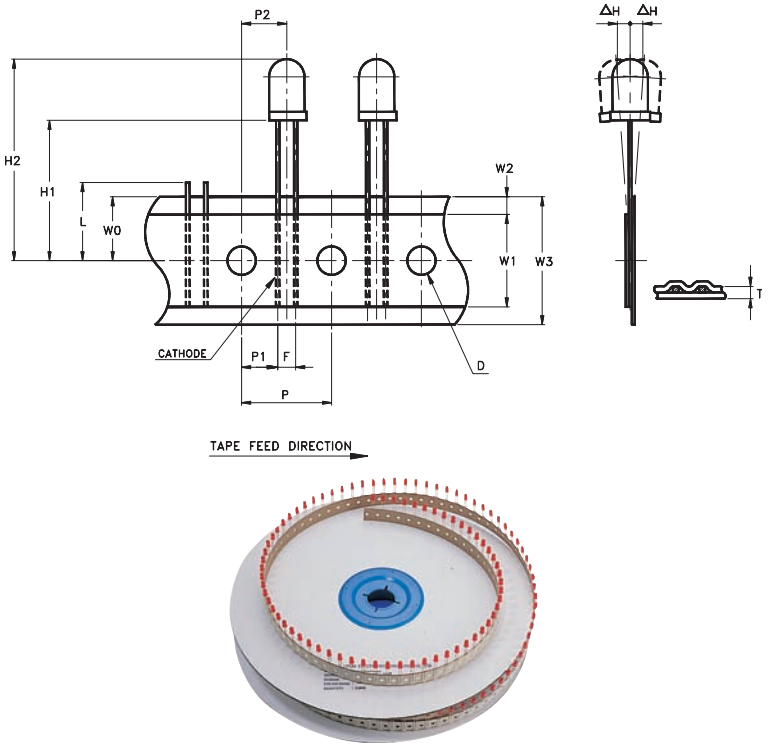	-002 -012 -022 -032 -042 -052 -062 -072 -082 -092 -0A2 -0B2 -0C2	2.54mm(0.1")Straight Leads with H_1=18.0mm(0.709") H_1=22.0mm(0.866") H_1=26.0mm(1.024") H_1=20.5mm(0.807") H_1=19.0mm(0.752") H_1=23.0mm(0.906") H_1=26.5mm(1.043") H_1=25.0mm(0.984") H_1=24.0mm(0.945") H_1=19.5mm(0.768") H_1=17.5mm(0.689") H_1=28.5mm(1.122") H_1=22.5mm(0.886") H_1:from Feed Hole to Bottom of Component.

10. Others

The appearance and specifications of the product may be modified for improvement, without prior notice.

LED Display

Lite-On LED displays provide high brightness, contrast, and wide viewing angles for performance in flat panel display solutions. 120°C high operation temperature displays also available for special requirement purpose. For colors include blue, green, yellow, amber, orange and red utilizing InGaN, AlInGaP, GaAsP and GaP of semiconductor materials.

Several kinds of package are available for particular application needs. Seven segment displays are designed for numeric indication on instruments, meters, home appliance, communication, computing equipment, and display panels. Single, dual, triple and quad digit displays are available with character heights ranging from 0.28 inch to 5 inches.

Dot matrix displays are applicable for indoor or semi-outdoor signboard application, such as information, graphics or advertisement sign boards. Single, dual and RGB full color displays are available with 2, 3, 4, 5 or 9mm of dot size packaging.

IC driver built in LED displays, Display module assemblies and Custom Made displays fulfill the requirements of our customers in short development lead times and high flexibility of design capabilities.

Low current displays provide excellent brightness readability with driving currents as low as 0.5 ~ 1mA condition, which is the suitable package for low power consumption solution.

LED Display

Single Digit Numeric LED Displays

7mm (.28")
Dual-In-Line
.39"H x .29"W x .24"D

7mm (.28")
Dual-In-Line
.39"H x .29"W x .24"D

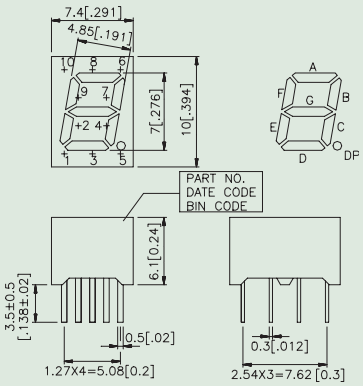

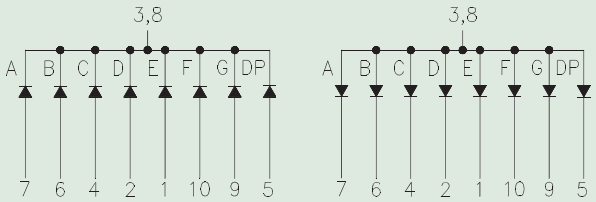

Part No.	Color(λ d)	Description	Typ.Iv/Seg @ IF=1mA
LTS-2301AJD	AlInGaP Hyper Red (639nm)	Common Cathode, Rt. Hand Decimal	600 μcd
LTS-2301AJG	AlInGaP Green (572nm)	Common Cathode, Rt. Hand Decimal	800 μcd
LTS-2301AKF	AlInGaP Yellow Orange (605nm)	Common Cathode, Rt. Hand Decimal	1200 μcd
LTS-2301AKS	AlInGaP Yellow (587nm)	Common Cathode, Rt. Hand Decimal	800 μcd
LTS-2301AJR	AlInGaP Super Red (631nm)	Common Cathode, Rt. Hand Decimal	600 μcd
LTS-2301ACB	InGaN Blue (470nm)	Common Cathode, Rt. Hand Decimal	600 μcd
LTS-2801AJD	AlInGaP Hyper Red (639nm)	Common Anode, Rt. Hand Decimal	600 μcd
LTS-2801AJG	AlInGaP Green (572nm)	Common Anode, Rt. Hand Decimal	800 μcd
LTS-2801AKF	AlInGaP Yellow Orange (605nm)	Common Anode, Rt. Hand Decimal	1200 μcd
LTS-2801AKS	AlInGaP Yellow (587nm)	Common Anode, Rt. Hand Decimal	800 μcd
LTS-2801AJR	AlInGaP Super Red (631nm)	Common Anode, Rt. Hand Decimal	600 μcd
LTS-2801ACB	InGaN Blue (470nm)	Common Anode, Rt. Hand Decimal	600 μcd

Single Digit Numeric LED Displays

7.62mm (.3")
Dual-In-Line
.5"H x .3"W x .2"D

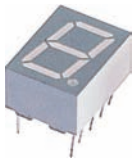

7.62mm (.3")
Dual-In-Line
.5"H x .3"W x .2"D

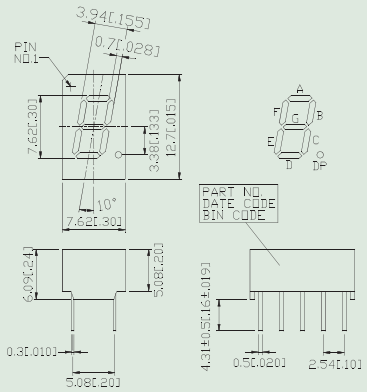

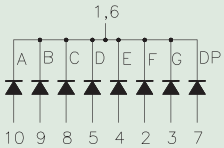

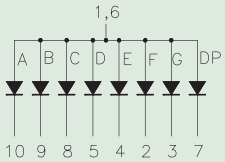

Part No.	Color(λ d)	Description	Typ.Iv/Seg @ IF=1mA
LTS-3361JD	AlInGaP Hyper Red (639nm)	Common Cathode, Rt. Hand Decimal	600 µcd
LTS-3361JG	AlInGaP Green (572nm)	Common Cathode, Rt. Hand Decimal	800 µcd
LTS-3361KF	AlInGaP Yellow Orange (605nm)	Common Cathode, Rt. Hand Decimal	1200 µcd
LTS-3361JS	AlInGaP Yellow (587nm)	Common Cathode, Rt. Hand Decimal	800 µcd
LTS-3361JR	AlInGaP Super Red (631nm)	Common Cathode, Rt. Hand Decimal	600 µcd
LTS-3361CB	InGaN Blue (470nm)	Common Cathode, Rt. Hand Decimal	600 µcd
LTS-3861JD	AlInGaP Hyper Red (639nm)	Common Anode, Rt. Hand Decimal	600 µcd
LTS-3861JG	AlInGaP Green (572nm)	Common Anode, Rt. Hand Decimal	800 µcd
LTS-3861KF	AlInGaP Yellow Orange (605nm)	Common Anode, Rt. Hand Decimal	1200 µcd
LTS-3861JS	AlInGaP Yellow (587nm)	Common Anode, Rt. Hand Decimal	800 µcd
LTS-3861JR	AlInGaP Super Red (631nm)	Common Anode, Rt. Hand Decimal	600 µcd
LTS-3861CB	InGaN Blue (470nm)	Common Anode, Rt. Hand Decimal	600 µcd

LED Display

Single Digit Numeric LED Displays

8mm (.31")
Dual-In-Line
.28"H x .43"W x .20"D

8mm (.31")
Dual-In-Line
.28"H x .43"W x .20"D

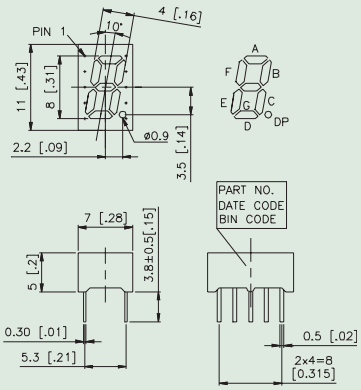

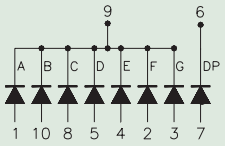

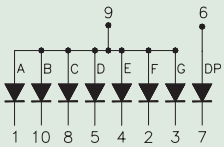

Part No.	Color(λ d)	Description	Typ.Iv/Seg @ IF=1mA
LTS-3367KD	AlInGaP Hyper Red (639nm)	Common Cathode, Rt. Hand Decimal	600 μcd
LTS-3367JG	AlInGaP Green (572nm)	Common Cathode, Rt. Hand Decimal	800 μcd
LTS-3367KF	AlInGaP Yellow Orange (605nm)	Common Cathode, Rt. Hand Decimal	1200 μcd
LTS-3367KS	AlInGaP Yellow (587nm)	Common Cathode, Rt. Hand Decimal	800 μcd
LTS-3367KR	AlInGaP Super Red (631nm)	Common Cathode, Rt. Hand Decimal	600 μcd
LTS-3367CB	InGaN Blue (470nm)	Common Cathode, Rt. Hand Decimal	600 μcd
LTS-3867JD	AlInGaP Hyper Red (639nm)	Common Anode, Rt. Hand Decimal	600 μcd
LTS-3867JG	AlInGaP Green (572nm)	Common Anode, Rt. Hand Decimal	800 μcd
LTS-3867KF	AlInGaP Yellow Orange (605nm)	Common Anode, Rt. Hand Decimal	1200 μcd
LTS-3867KS	AlInGaP Yellow (587nm)	Common Anode, Rt. Hand Decimal	800 μcd
LTS-3867KR	AlInGaP Super Red (631nm)	Common Anode, Rt. Hand Decimal	600 μcd
LTS-3867CB	InGaN Blue (470nm)	Common Anode, Rt. Hand Decimal	600 μcd

Single Digit Numeric LED Displays

10.0mm (.4")
Dual-In-Line
.5"H x .38"W x .27"D

10.0mm (.4")
Dual-In-Line
.5"H x .38"W x .27"D

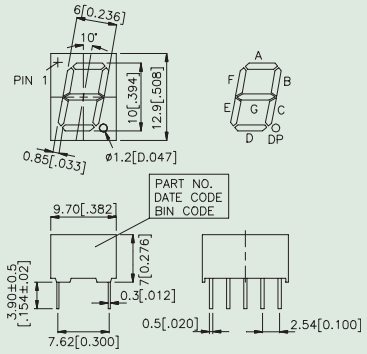

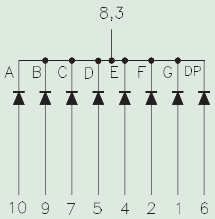

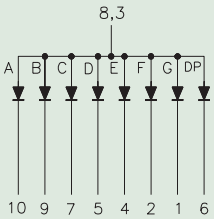

Part No.	Color(λ d)	Description	Typ.Iv/Seg @ IF=1mA
LTS-4301JD	AlInGaP Hyper Red (639nm)	Common Cathode, Rt. Hand Decimal	650 µcd
LTS-4301JG	AlInGaP Green (572nm)	Common Cathode, Rt. Hand Decimal	850 µcd
LTS-4301KF	AlInGaP Yellow Orange (605nm)	Common Cathode, Rt. Hand Decimal	1300 µcd
LTS-4301JS	AlInGaP Yellow (587nm)	Common Cathode, Rt. Hand Decimal	850 µcd
LTS-4301JR	AlInGaP Super Red (631nm)	Common Cathode, Rt. Hand Decimal	650 µcd
LTS-4301CB	InGaN Blue (470nm)	Common Cathode, Rt. Hand Decimal	650 µcd
LTS-4801JD	AlInGaP Hyper Red (639nm)	Common Anode, Rt. Hand Decimal	650 µcd
LTS-4801JG	AlInGaP Green (572nm)	Common Anode, Rt. Hand Decimal	850 µcd
LTS-4801KF	AlInGaP Yellow Orange (605nm)	Common Anode, Rt. Hand Decimal	1300 µcd
LTS-4801JS	AlInGaP Yellow (587nm)	Common Anode, Rt. Hand Decimal	850 µcd
LTS-4801JR	AlInGaP Super Red (631nm)	Common Anode, Rt. Hand Decimal	650 µcd
LTS-4801CB	InGaN Blue (470nm)	Common Anode, Rt. Hand Decimal	650 µcd

LED Display

Single Digit Numeric LED Displays

10.0mm (.4")
Dual-In-Line
.5"H x .38"W x .27"D

10.0mm (.4")
Dual-In-Line
.5"H x .38"W x .27"D

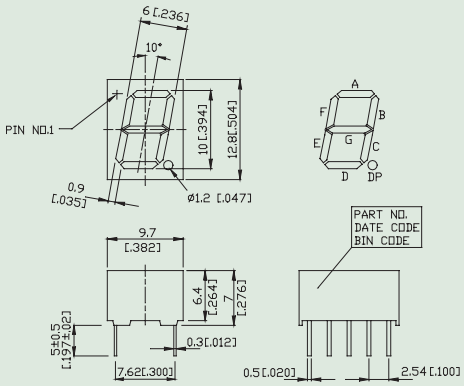

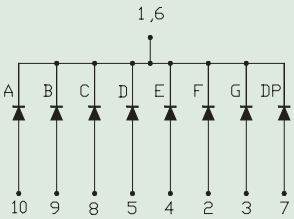

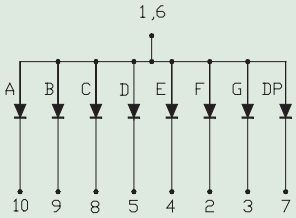

Part No.	Color(λ d)	Description	Typ.Iv/Seg @ IF=1mA
LTS-4302JD	AlInGaP Hyper Red (639nm)	Common Cathode, Rt. Hand Decimal	650 μcd
LTS-4302JG	AlInGaP Green (572nm)	Common Cathode, Rt. Hand Decimal	850 μcd
LTS-4302KF	AlInGaP Yellow Orange (605nm)	Common Cathode, Rt. Hand Decimal	1300 μcd
LTS-4302KS	AlInGaP Yellow (587nm)	Common Cathode, Rt. Hand Decimal	850 μcd
LTS-4302KR	AlInGaP Super Red (631nm)	Common Cathode, Rt. Hand Decimal	650 μcd
LTS-4302CB	InGaN Blue (470nm)	Common Cathode, Rt. Hand Decimal	650 μcd
LTS-4802JD	AlInGaP Hyper Red (639nm)	Common Anode, Rt. Hand Decimal	650 μcd
LTS-4802JG	AlInGaP Green (572nm)	Common Anode, Rt. Hand Decimal	850 μcd
LTS-4802KF	AlInGaP Yellow Orange (605nm)	Common Anode, Rt. Hand Decimal	1300 μcd
LTS-4802KS	AlInGaP Yellow (587nm)	Common Anode, Rt. Hand Decimal	850 μcd
LTS-4802KR	AlInGaP Super Red (631nm)	Common Anode, Rt. Hand Decimal	650 μcd
LTS-4802CB	InGaN Blue (470nm)	Common Anode, Rt. Hand Decimal	650 μcd

Single Digit Numeric LED Displays

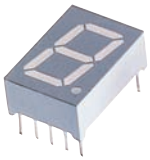

13.2mm (.52")
Dual-In-Line
.7"H x .49"W x .28"D

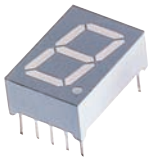

13.2mm (.52")
Dual-In-Line
.7"H x .49"W x .28"D

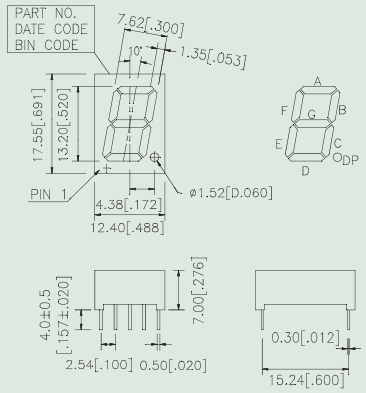

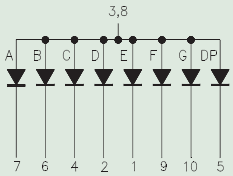

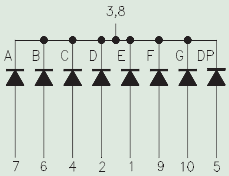

Part No.	Color(λ d)	Description	Typ.Iv/Seg @ IF=1mA
LTS-546AJD	AlInGaP Hyper Red (639nm)	Common Anode, Rt. Hand Decimal	700 µcd
LTS-546AJG	AlInGaP Green (572nm)	Common Anode, Rt. Hand Decimal	900 µcd
LTS-546AKF	AlInGaP Yellow Orange (605nm)	Common Anode, Rt. Hand Decimal	1600 µcd
LTS-546AKS	AlInGaP Yellow (587nm)	Common Anode, Rt. Hand Decimal	900 µcd
LTS-546AKR	AlInGaP Super Red (631nm)	Common Anode, Rt. Hand Decimal	700 µcd
LTS-546ACB	InGaN Blue (470nm)	Common Anode, Rt. Hand Decimal	750 µcd
LTS-547AJD	AlInGaP Hyper Red (639nm)	Common Cathode, Rt. Hand Decimal	700 µcd
LTS-547AJG	AlInGaP Green (572nm)	Common Cathode, Rt. Hand Decimal	900 µcd
LTS-547AKF	AlInGaP Yellow Orange (605nm)	Common Cathode, Rt. Hand Decimal	1600 µcd
LTS-547AKS	AlInGaP Yellow (587nm)	Common Cathode, Rt. Hand Decimal	900 µcd
LTS-547AKR	AlInGaP Super Red (631nm)	Common Cathode, Rt. Hand Decimal	700 µcd
LTS-547ACB	InGaN Blue (470nm)	Common Cathode, Rt. Hand Decimal	750 µcd

Single Digit Numeric LED Displays

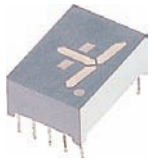

11.85mm (.47")
Dual-In-Line
.7"H x .49"W x .28"D

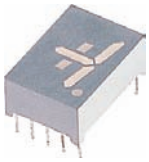

11.85mm (.47")
Dual-In-Line
.7"H x .49"W x .28"D

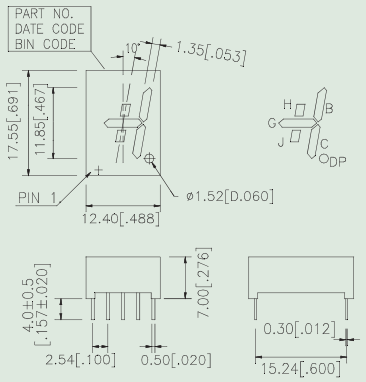

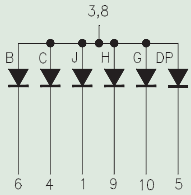

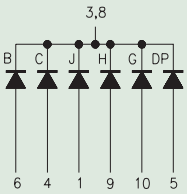

Part No.	Color(λ d)	Description	Typ.Iv/Seg @ IF=1mA
LTS-548AJD	AlInGaP Hyper Red (639nm)	Common Anode, Rt. Hand Decimal	700 μcd
LTS-548AJG	AlInGaP Green (572nm)	Common Anode, Rt. Hand Decimal	900 μcd
LTS-548AKF	AlInGaP Yellow Orange (605nm)	Common Anode, Rt. Hand Decimal	1600 μcd
LTS-548AKS	AlInGaP Yellow (587nm)	Common Anode, Rt. Hand Decimal	900 μcd
LTS-548AKR	AlInGaP Super Red (631nm)	Common Anode, Rt. Hand Decimal	700 μcd
LTS-548ACB	InGaN Blue (470nm)	Common Anode, Rt. Hand Decimal	750 μcd
LTS-549AJD	AlInGaP Hyper Red (639nm)	Common Cathode, Rt. Hand Decimal	700 μcd
LTS-549AJG	AlInGaP Green (572nm)	Common Cathode, Rt. Hand Decimal	900 μcd
LTS-549AKF	AlInGaP Yellow Orange (605nm)	Common Cathode, Rt. Hand Decimal	1600 μcd
LTS-549AKS	AlInGaP Yellow (587nm)	Common Cathode, Rt. Hand Decimal	900 μcd
LTS-549AKR	AlInGaP Super Red (631nm)	Common Cathode, Rt. Hand Decimal	700 μcd
LTS-549ACB	InGaN Blue (470nm)	Common Cathode, Rt. Hand Decimal	750 μcd

Single Digit Numeric LED Displays

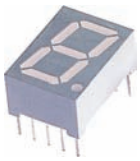

14.22mm (.56")
Dual-In-Line
.67"H x .49"W x .32"D

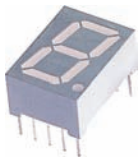

14.22mm (.56")
Dual-In-Line
.67"H x .49"W x .32"D

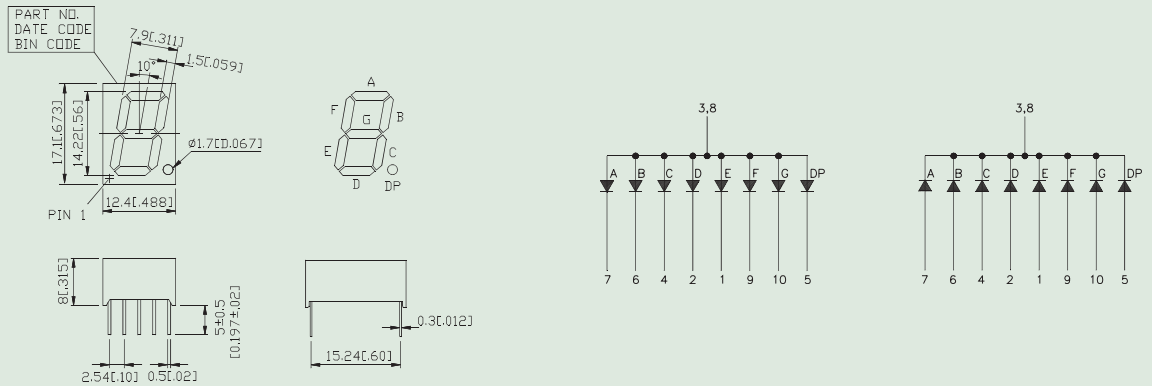

Part No.	Color(λ d)	Description	Typ.Iv/Seg @ IF=1mA
LTS-5001AJD	AlInGaP Hyper Red (639nm)	Common Anode, Rt. Hand Decimal	700 µcd
LTS-5601AJG	AlInGaP Green (572nm)	Common Anode, Rt. Hand Decimal	900 µcd
LTS-5701AKF	AlInGaP Yellow Orange (605nm)	Common Anode, Rt. Hand Decimal	1600 µcd
LTS-5701AJS	AlInGaP Yellow (587nm)	Common Anode, Rt. Hand Decimal	900 µcd
LTS-5001AJR	AlInGaP Super Red (631nm)	Common Anode, Rt. Hand Decimal	700 µcd
LTS-5501ACB	InGaN Blue (470nm)	Common Anode, Rt. Hand Decimal	750 µcd
LTS-5003AJD	AlInGaP Hyper Red (639nm)	Common Cathode, Rt. Hand Decimal	700 µcd
LTS-5603AJG	AlInGaP Green (572nm)	Common Cathode, Rt. Hand Decimal	900 µcd
LTS-5703AKF	AlInGaP Yellow Orange (605nm)	Common Cathode, Rt. Hand Decimal	1600 µcd
LTS-5703AJS	AlInGaP Yellow (587nm)	Common Cathode, Rt. Hand Decimal	900 µcd
LTS-5003AJR	AlInGaP Super Red (631nm)	Common Cathode, Rt. Hand Decimal	700 µcd
LTS-5503ACB	InGaN Blue (470nm)	Common Cathode, Rt. Hand Decimal	750 µcd

Single Digit Numeric LED Displays

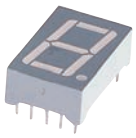

14.22mm (.56")
Dual-In-Line
.75"H x .5"W x .32"D

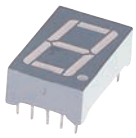

14.22mm (.56")
Dual-In-Line
.75"H x .5"W x .32"D

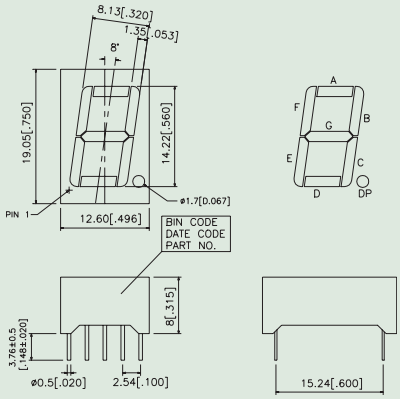

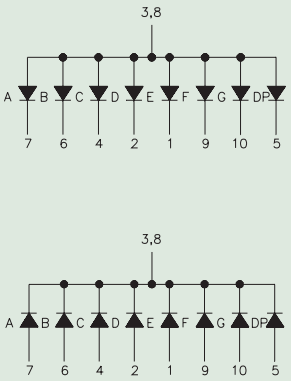

Part No.	Color(λ d)	Description	Typ.Iv/Seg @ IF=1mA
LTS-6760JD	AlInGaP Hyper Red (639nm)	Common Anode, Rt. Hand Decimal	700 μcd
LTS-6760KG	AlInGaP Green (572nm)	Common Anode, Rt. Hand Decimal	900 μcd
LTS-6760KF	AlInGaP Yellow Orange (605nm)	Common Anode, Rt. Hand Decimal	1600 μcd
LTS-6760KS	AlInGaP Yellow (587nm)	Common Anode, Rt. Hand Decimal	900 μcd
LTS-6760KR	AlInGaP Super Red (631nm)	Common Anode, Rt. Hand Decimal	700 μcd
LTS-6760CB	InGaN Blue (470nm)	Common Anode, Rt. Hand Decimal	750 μcd
LTS-6780JD	AlInGaP Hyper Red (639nm)	Common Cathode, Rt. Hand Decimal	700 μcd
LTS-6780KG	AlInGaP Green (572nm)	Common Cathode, Rt. Hand Decimal	900 μcd
LTS-6780KF	AlInGaP Yellow Orange (605nm)	Common Cathode, Rt. Hand Decimal	1600 μcd
LTS-6780KS	AlInGaP Yellow (587nm)	Common Cathode, Rt. Hand Decimal	900 μcd
LTS-6780KR	AlInGaP Super Red (631nm)	Common Cathode, Rt. Hand Decimal	700 μcd
LTS-6780CB	InGaN Blue (470nm)	Common Cathode, Rt. Hand Decimal	750 μcd

Single Digit Numeric LED Displays

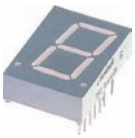

20.32mm (.8")
Dual-In-Line
1.09"H x .79"W x .33"D

20.32mm (.8")
Dual-In-Line
1.09"H x .79"W x .33"D

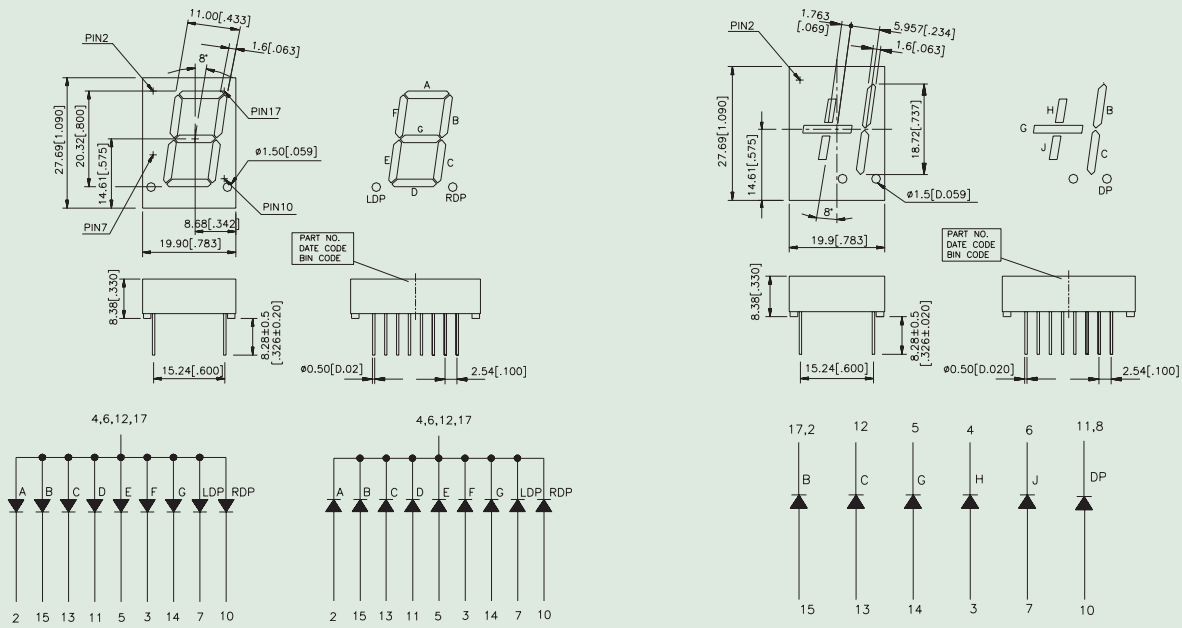

Part No.	Color(λ d)	Description	Typ.Iv/Seg @ IF=1mA
LTS-3401LJD	AlInGaP Hyper Red (639nm)	Common Anode, Rt. Hand Decimal	700 µcd
LTS-3401LJG	AlInGaP Green (572nm)	Common Anode, Rt. Hand Decimal	900 µcd
LTS-3401LKF	AlInGaP Yellow Orange (605nm)	Common Anode, Rt. Hand Decimal	1400 µcd
LTS-3401LJS	AlInGaP Yellow (587nm)	Common Anode, Rt. Hand Decimal	900 µcd
LTS-3401LJR	AlInGaP Super Red (631nm)	Common Anode, Rt. Hand Decimal	700 µcd
LTS-3403LJD	AlInGaP Hyper Red (639nm)	Common Cathode, Rt. Hand Decimal	700 µcd
LTS-3403LJG	AlInGaP Green (572nm)	Common Cathode, Rt. Hand Decimal	900 µcd
LTS-3403LKF	AlInGaP Yellow Orange (605nm)	Common Cathode, Rt. Hand Decimal	1400 µcd
LTS-3403LJS	AlInGaP Yellow (587nm)	Common Cathode, Rt. Hand Decimal	900 µcd
LTS-3403LJR	AlInGaP Super Red (631nm)	Common Cathode, Rt. Hand Decimal	700 µcd
LTS-3406LJD	AlInGaP Hyper Red (639nm)	Universal, ± 1 Overflow	700 µcd
LTS-3406LJG	AlInGaP Green (572nm)	Universal, ± 1 Overflow	900 µcd
LTS-3406LKF	AlInGaP Yellow Orange (605nm)	Universal, ± 1 Overflow	1400 µcd
LTS-3406LJS	AlInGaP Yellow (587nm)	Universal, ± 1 Overflow	900 µcd
LTS-3406LJR	AlInGaP Super Red (631nm)	Universal, ± 1 Overflow	700 µcd

Single Digit Numeric LED Displays

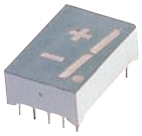

14.22mm (.56")
Dual-In-Line
.75"H x .5"W x .32"D

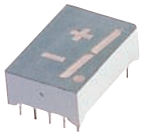

14.22mm (.56")
Dual-In-Line
.75"H x .5"W x .32"D

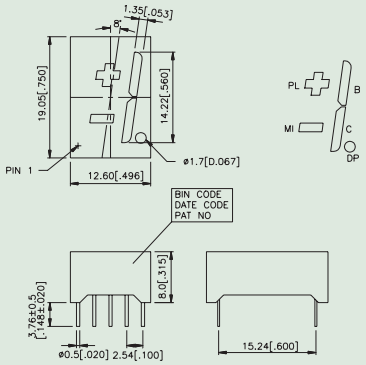

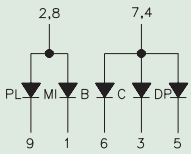

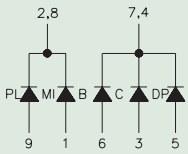

Part No.	Color(λ d)	Description	Typ.Iv/Seg @ IF=1mA
LTS-6775JD	AlInGaP Hyper Red (639nm)	Common Anode, ± 1 Overflow	700 μcd
LTS-6775KG	AlInGaP Green (572nm)	Common Anode, ± 1 Overflow	900 μcd
LTS-6475KF	AlInGaP Yellow Orange (605nm)	Common Anode, ± 1 Overflow	1600 μcd
LTS-6875KS	AlInGaP Yellow (587nm)	Common Anode, ± 1 Overflow	900 μcd
LTS-6675KR	AlInGaP Super Red (631nm)	Common Anode, ± 1 Overflow	700 μcd
LTS-6795JD	AlInGaP Hyper Red (639nm)	Common Cathode, ± 1 Overflow	700 μcd
LTS-6795KG	AlInGaP Green (572nm)	Common Cathode, ± 1 Overflow	900 μcd
LTS-6495KF	AlInGaP Yellow Orange (605nm)	Common Cathode, ± 1 Overflowl	1600 μcd
LTS-6895KS	AlInGaP Yellow (587nm)	Common Cathode, ± 1 Overflow	900 μcd
LTS-6695KR	AlInGaP Super Red (631nm)	Common Cathode, ± 1 Overflow	700 μcd

Single Digit Numeric LED Displays

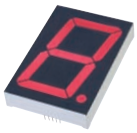

57mm (2.244")
Dual-In-Line
1.882"H x 2.744"W x .472"D

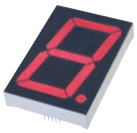

57mm (2.244")
Dual-In-Line
1.882"H x 2.744"W x .472"D

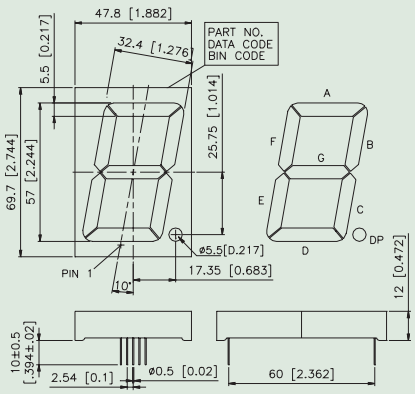

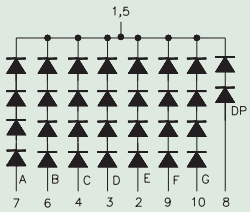

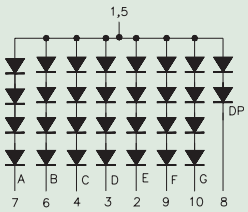

Part No.	Color(λ d)	Description	Typ.Iv/Seg @ IF=1mA
LTS-23305KD	AlInGaP Hyper Red (639nm)	Common Cathode, Rt. & Lt. Hand Decimal	10 mcd
LTS-23305JG	AlInGaP Green (572nm)	Common Cathode, Rt. & Lt. Hand Decimal	10 mcd
LTS-23305KF	AlInGaP Yellow Orange (605nm)	Common Cathode, Rt. & Lt. Hand Decimal	10 mcd
LTS-23305KS	AlInGaP Yellow (587nm)	Common Cathode, Rt. & Lt. Hand Decimal	10 mcd
LTS-23305KR	AlInGaP Super Red (631nm)	Common Cathode, Rt. & Lt. Hand Decimal	10 mcd
LTS-23805KD	AlInGaP Hyper Red (639nm)	Common Anode, Rt. & Lt. Hand Decimal	10 mcd
LTS-23805JG	AlInGaP Green (572nm)	Common Anode, Rt. & Lt. Hand Decimal	10 mcd
LTS-23805KF	AlInGaP Yellow Orange (605nm)	Common Anode, Rt. & Lt. Hand Decimal	10 mcd
LTS-23805KS	AlInGaP Yellow (587nm)	Common Anode, Rt. & Lt. Hand Decimal	10 mcd
LTS-23805KR	AlInGaP Super Red (631nm)	Common Anode, Rt. & Lt. Hand Decimal	10 mcd

LED Display

Single Digit Numeric LED Displays

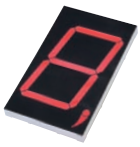

127mm (5")
Dual-In-Line
1.882"H x 2.744"W x .472"D

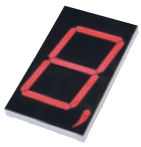

127mm (5")
Dual-In-Line
1.882"H x 2.744"W x .472"D

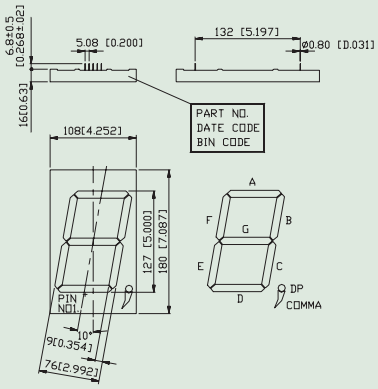

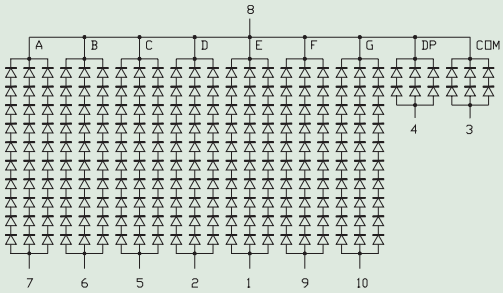

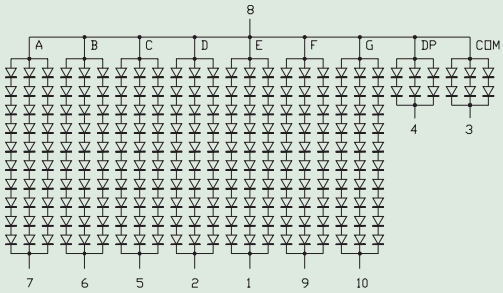

Part No.	Color(λ d)	Description	Typ.Iv/Seg @ IF=1mA
LTS-50301JG	AlInGaP Green (569nm)	Common Cathode, Rt. & Lt. Hand Decimal	18 mcd
LTS-50301KE	AlInGaP Red (623nm)	Common Cathode, Rt. & Lt. Hand Decimal	24.2 mcd
LTS-50801JG	AlInGaP Green (572nm)	Common Anode, Rt. & Lt. Hand Decimal	18 mcd
LTS-50801KE	AlInGaP Red (624nm)	Common Anode, Rt. & Lt. Hand Decimal	24.2 mcd

Dual Digits Numeric LED Displays

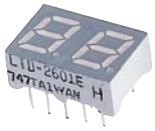

7.0mm (.28")
Dual-In-Line
.39"H x .59"W x .24"D

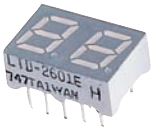

7.0mm (.28")
Dual-In-Line
.39"H x .59"W x .24"D

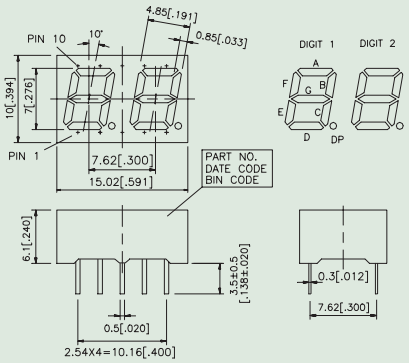

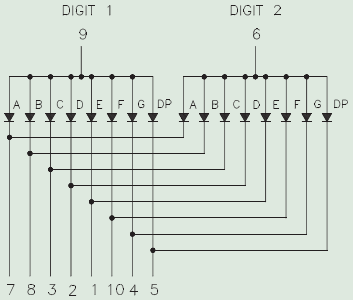

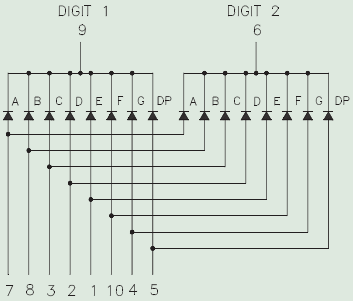

Part No.	Color(λ d)	Description	Typ.Iv/Seg @ IF=1mA
LTD-2601JD	AlInGaP Hyper Red (639nm)	Duplex Common Anode, Rt. Hand Decimal	600 μcd
LTD-2601JG	AlInGaP Green (572nm)	Duplex Common Anode, Rt. Hand Decimal	800 μcd
LTD-2601KF	AlInGaP Yellow Orange (605nm)	Duplex Common Anode, Rt. Hand Decimal	1200 μcd
LTD-2601KS	AlInGaP Yellow (587nm)	Duplex Common Anode, Rt. Hand Decimal	800 μcd
LTD-2601KR	AlInGaP Super Red (631nm)	Duplex Common Anode, Rt. Hand Decimal	600 μcd
LTD-2601CB	InGaN Blue (470nm)	Duplex Common Anode, Rt. Hand Decimal	600 μcd
LTD-2701JD	AlInGaP Hyper Red (639nm)	Duplex Common Cathode, Rt. Hand Decimal	600 μcd
LTD-2701JG	AlInGaP Green (572nm)	Duplex Common Cathode, Rt. Hand Decimal	800 μcd
LTD-2701KF	AlInGaP Yellow Orange (605nm)	Duplex Common Cathode, Rt. Hand Decimal	1200 μcd
LTD-2701KS	AlInGaP Yellow (587nm)	Duplex Common Cathode, Rt. Hand Decimal	800 μcd
LTD-2701KR	AlInGaP Super Red (631nm)	Duplex Common Cathode, Rt. Hand Decimal	600 μcd
LTD-2701CB	InGaN Blue (470nm)	Duplex Common Cathode, Rt. Hand Decimal	600 μcd

LED Display

Dual Digits Numeric LED Displays

7.62mm (.3")
Dual-In-Line
.59"H x .62"W x .29"D

7.62mm (.3")
Dual-In-Line
.59"H x .62"W x .29"D

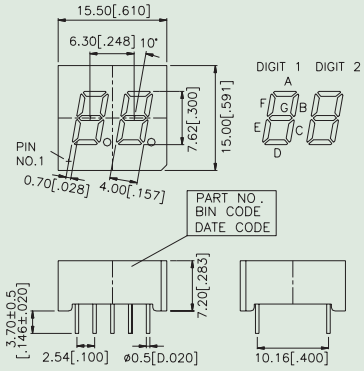

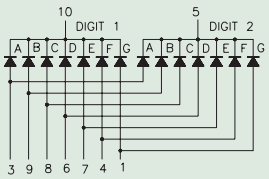

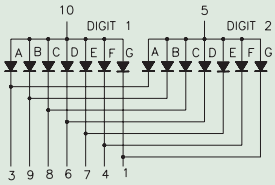

Part No.	Color(λ d)	Description	Typ.Iv/Seg @ IF=1mA
LTD-322JD	AlInGaP Hyper Red (639nm)	Duplex Common Cathode, Rt. Hand Decimal	600 μcd
LTD-322JG	AlInGaP Green (572nm)	Duplex Common Cathode, Rt. Hand Decimal	800 μcd
LTD-322KF	AlInGaP Yellow Orange (605nm)	Duplex Common Cathode, Rt. Hand Decimal	1200 μcd
LTD-322JS	AlInGaP Yellow (587nm)	Duplex Common Cathode, Rt. Hand Decimal	800 μcd
LTD-322JR	AlInGaP Super Red (631nm)	Duplex Common Cathode, Rt. Hand Decimal	600 μcd
LTD-322CB	InGaN Blue (470nm)	Duplex Common Cathode, Rt. Hand Decimal	600 μcd
LTD-323JD	AlInGaP Hyper Red (639nm)	Duplex Common Anode, Rt. Hand Decimal	600 μcd
LTD-323JG	AlInGaP Green (572nm)	Duplex Common Anode, Rt. Hand Decimal	800 μcd
LTD-323KF	AlInGaP Yellow Orange (605nm)	Duplex Common Anode, Rt. Hand Decimal	1200 μcd
LTD-323JS	AlInGaP Yellow (587nm)	Duplex Common Anode, Rt. Hand Decimal	800 μcd
LTD-323JR	AlInGaP Super Red (631nm)	Duplex Common Anode, Rt. Hand Decimal	600 μcd
LTD-323CB	InGaN Blue (470nm)	Duplex Common Anode, Rt. Hand Decimal	600 μcd

Dual Digits Numeric LED Displays

10.0mm (.4")
Dual-In-Line
.5"H x 1.58"W x .28"D

10.0mm (.4")
Dual-In-Line
.5"H x 1.58"W x .28"D

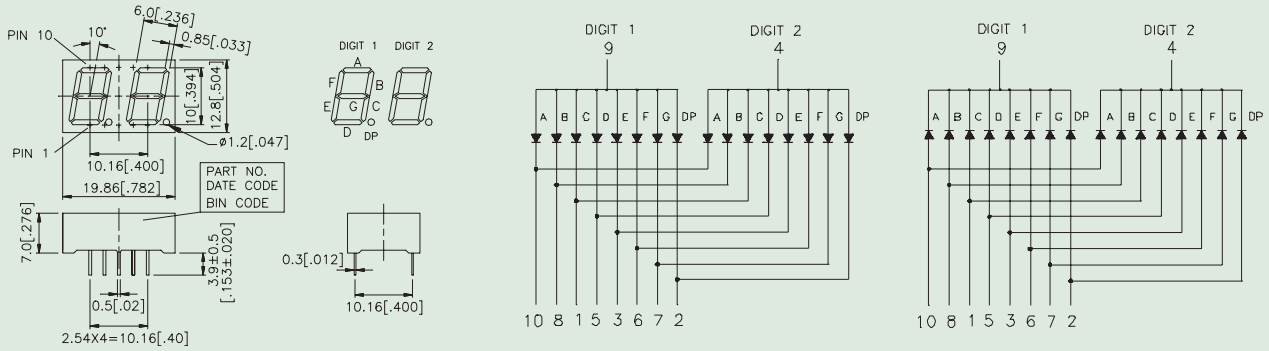

Part No.	Color(λ d)	Description	Typ.Iv/Seg @ IF=1mA
LTD-4608JD	AlInGaP Hyper Red (639nm)	Duplex Common Anode, Rt. Hand Decimal	650 μcd
LTD-4608JG	AlInGaP Green (572nm)	Duplex Common Anode, Rt. Hand Decimal	850 μcd
LTD-4608KF	AlInGaP Yellow Orange (605nm)	Duplex Common Anode, Rt. Hand Decimal	1300 μcd
LTD-4608JS	AlInGaP Yellow (587nm)	Duplex Common Anode, Rt. Hand Decimal	8500 μcd
LTD-4608JR	AlInGaP Super Red (631nm)	Duplex Common Anode, Rt. Hand Decimal	650 μcd
LTD-4608CB	InGaN Blue (470nm)	Duplex Common Anode, Rt. Hand Decimal	650 μcd
LTD-4708JD	AlInGaP Hyper Red (639nm)	Duplex Common Cathode, Rt. Hand Decimal	650 μcd
LTD-4708JG	AlInGaP Green (572nm)	Duplex Common Cathode, Rt. Hand Decimal	850 μcd
LTD-4708KF	AlInGaP Yellow Orange (605nm)	Duplex Common Cathode, Rt. Hand Decimal	1300 μcd
LTD-4708KS	AlInGaP Yellow (587nm)	Duplex Common Cathode, Rt. Hand Decimal	8500 μcd
LTD-4708JR	AlInGaP Super Red (631nm)	Duplex Common Cathode, Rt. Hand Decimal	650 μcd
LTD-4708CB	InGaN Blue (470nm)	Duplex Common Cathode, Rt. Hand Decimal	650 μcd

LED Display

Dual Digits Numeric LED Displays

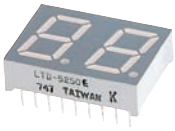

13.2mm (.52")
Dual-In-Line
.69"H x99"W x .28"D

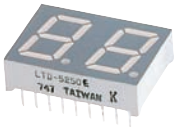

13.2mm (.52")
Dual-In-Line
.69"H x99"W x .28"D

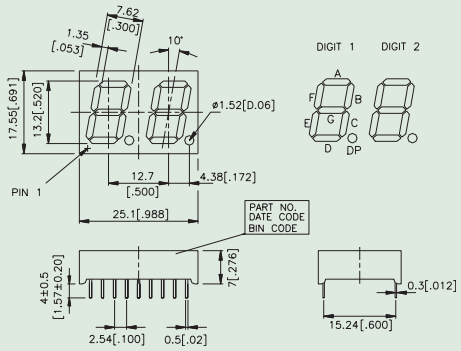

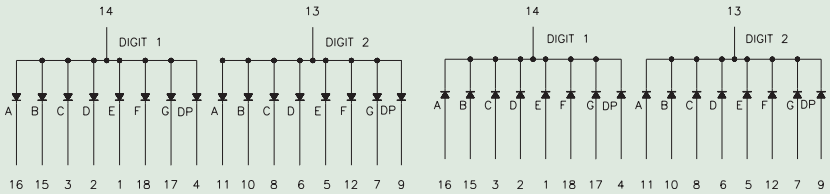

Part No.	Color(λ d)	Description	Typ.Iv/Seg @ IF=1mA
LTD-5250JD	AlInGaP Hyper Red (639nm)	Common Anode, Rt. Hand Decimal	700 μcd
LTD-5250JG	AlInGaP Green (572nm)	Common Anode, Rt. Hand Decimal	900 μcd
LTD-5250KF	AlInGaP Yellow Orange (605nm)	Common Anode, Rt. Hand Decimal	1600 μcd
LTD-5250KS	AlInGaP Yellow (587nm)	Common Anode, Rt. Hand Decimal	900 μcd
LTD-5250JR	AlInGaP Super Red (631nm)	Common Anode, Rt. Hand Decimal	700 μcd
LTD-5250CB	InGaN Blue (470nm)	Common Anode, Rt. Hand Decimal	750 μcd
LTD-5260JD	AlInGaP Hyper Red (639nm)	Common Cathode, Rt. Hand Decimal	700 μcd
LTD-5260JG	AlInGaP Green (572nm)	Common Cathode, Rt. Hand Decimal	900 μcd
LTD-5260KF	AlInGaP Yellow Orange (605nm)	Common Cathode, Rt. Hand Decimal	1600 μcd
LTD-5260KS	AlInGaP Yellow (587nm)	Common Cathode, Rt. Hand Decimal	900 μcd
LTD-5260JR	AlInGaP Super Red (631nm)	Common Cathode, Rt. Hand Decimal	700 μcd
LTD-5260CB	InGaN Blue (470nm)	Common Cathode, Rt. Hand Decimal	750 μcd

Dual Digits Numeric LED Displays

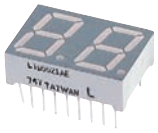

14.2mm (0.56")
Dual-In-Line
.67"H x .98"W x .32"D

14.2mm (0.56")
Dual-In-Line
.67"H x .98"W x .32"D

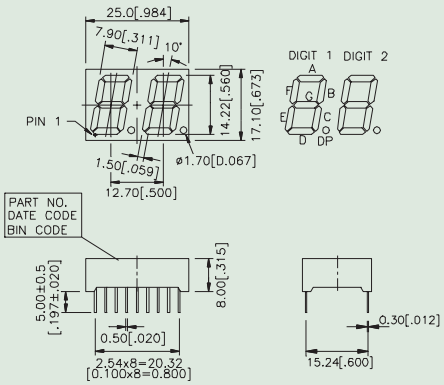

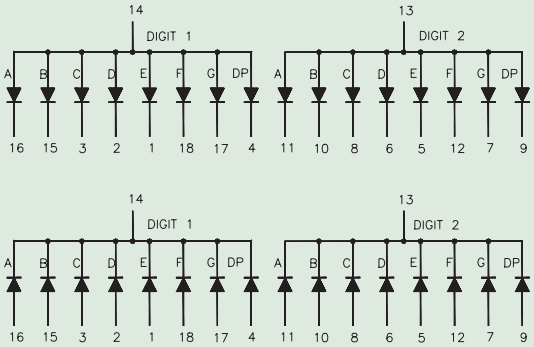

Part No.	Color(λ d)	Description	Typ.Iv/Seg @ IF=1mA
LTD-5021AJD	AlInGaP Hyper Red (639nm)	Common Anode, Rt. Hand Decimal	700 µcd
LTD-5621AJG	AlInGaP Green (572nm)	Common Anode, Rt. Hand Decimal	900 µcd
LTD-5721AKF	AlInGaP Yellow Orange (605nm)	Common Anode, Rt. Hand Decimal	1600 µcd
LTD-5721AJS	AlInGaP Yellow (587nm)	Common Anode, Rt. Hand Decimal	900 µcd
LTD-5521AJR	AlInGaP Super Red (631nm)	Common Anode, Rt. Hand Decimal	700 µcd
LTD-5521ACB	InGaN Blue (470nm)	Common Anode, Rt. Hand Decimal	750 µcd
LTD-5023AJD	AlInGaP Hyper Red (639nm)	Common Cathode, Rt. Hand Decimal	700 µcd
LTD-5623AJG	AlInGaP Green (572nm)	Common Cathode, Rt. Hand Decimal	900 µcd
LTD-5723AKF	AlInGaP Yellow Orange (605nm)	Common Cathode, Rt. Hand Decimal	1600 µcd
LTD-5723AJS	AlInGaP Yellow (587nm)	Common Cathode, Rt. Hand Decimal	900 µcd
LTD-5523AJR	AlInGaP Super Red (631nm)	Common Cathode, Rt. Hand Decimal	700 µcd
LTD-5523ACB	InGaN Blue (470nm)	Common Cathode, Rt. Hand Decimal	750 µcd

Dual Digits Numeric LED Displays

14.22mm (.56")
Dual-In-Line
.75"H x .98"W x .32"D

14.22mm (.56")
Dual-In-Line
.75"H x .98"W x .32"D

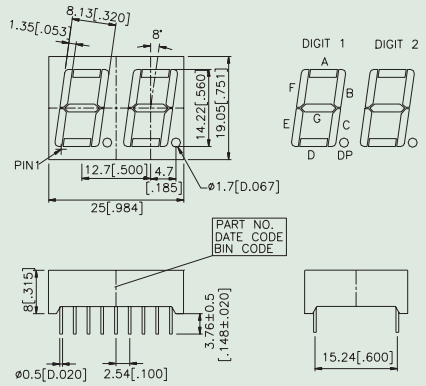

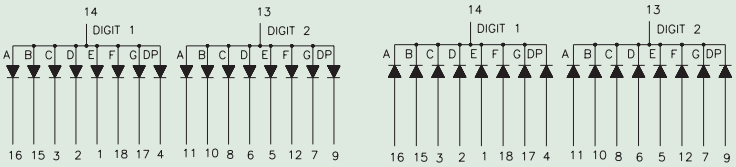

Part No.	Color(λ d)	Description	Typ.Iv/Seg @ IF=1mA
LTD-6710JD	AlInGaP Hyper Red (639nm)	Common Anode, Rt. Hand Decimal	700 μcd
LTD-6710JG	AlInGaP Green (572nm)	Common Anode, Rt. Hand Decimal	900 μcd
LTD-6710KF	AlInGaP Yellow Orange (605nm)	Common Anode, Rt. Hand Decimal	1600 μcd
LTD-6710KS	AlInGaP Yellow (587nm)	Common Anode, Rt. Hand Decimal	900 μcd
LTD-6710KR	AlInGaP Super Red (631nm)	Common Anode, Rt. Hand Decimal	700 μcd
LTD-6710CB	InGaN Blue (470nm)	Common Anode, Rt. Hand Decimal	750 μcd
LTD-6740JD	AlInGaP Hyper Red (639nm)	Common Cathode, Rt. Hand Decimal	700 μcd
LTD-6740JG	AlInGaP Green (572nm)	Common Cathode, Rt. Hand Decimal	900 μcd
LTD-6740KF	AlInGaP Yellow Orange (605nm)	Common Cathode, Rt. Hand Decimal	1600 μcd
LTD-6740KS	AlInGaP Yellow (587nm)	Common Cathode, Rt. Hand Decimal	900 μcd
LTD-6740KR	AlInGaP Super Red (631nm)	Common Cathode, Rt. Hand Decimal	700 μcd
LTD-6740CB	InGaN Blue (470nm)	Common Cathode, Rt. Hand Decimal	750 μcd

Dual Digits Numeric LED Displays

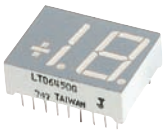

14.22mm (.56")
Dual-In-Line
.75"H x .98"W x .32"D

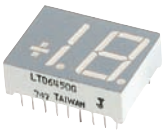

14.22mm (.56")
Dual-In-Line
.75"H x .98"W x .32"D

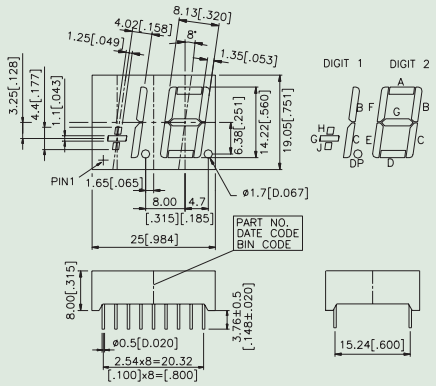

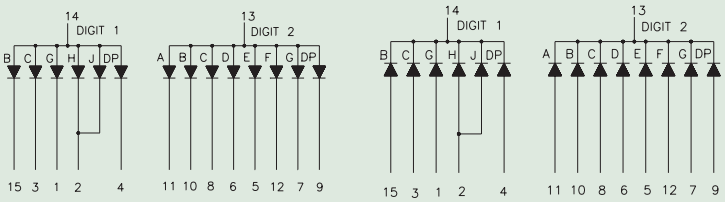

Part No.	Color(λ d)	Description	Typ.Iv/Seg @ IF=1mA
LTD-6730JD	AlInGaP Hyper Red (639nm)	Common Anode, Rt. Hand Decimal	700 µcd
LTD-6430JG	AlInGaP Green (572nm)	Common Anode, Rt. Hand Decimal	900 µcd
LTD-6630KF	AlInGaP Yellow Orange (605nm)	Common Anode, Rt. Hand Decimal	1600 µcd
LTD-6830KS	AlInGaP Yellow (587nm)	Common Anode, Rt. Hand Decimal	900 µcd
LTD-6730KR	AlInGaP Super Red (631nm)	Common Anode, Rt. Hand Decimal	700 µcd
LTD-6750JD	AlInGaP Hyper Red (639nm)	Common Cathode, Rt. Hand Decimal	700 µcd
LTD-6450JG	AlInGaP Green (572nm)	Common Cathode, Rt. Hand Decimal	900 µcd
LTD-6650KF	AlInGaP Yellow Orange (605nm)	Common Cathode, Rt. Hand Decimal	1600 µcd
LTD-6850KS	AlInGaP Yellow (587nm)	Common Cathode, Rt. Hand Decimal	900 µcd
LTD-6750KR	AlInGaP Super Red (631nm)	Common Cathode, Rt. Hand Decimal	700 µcd

Three-Digits Numeric LED Displays

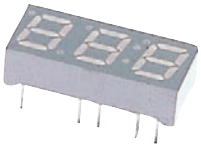

7.0mm (.28")
Dual-In-Line
.39"H x .89"W x .24"D

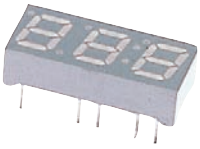

7.0mm (.28")
Dual-In-Line
.39"H x .89"W x .24"D

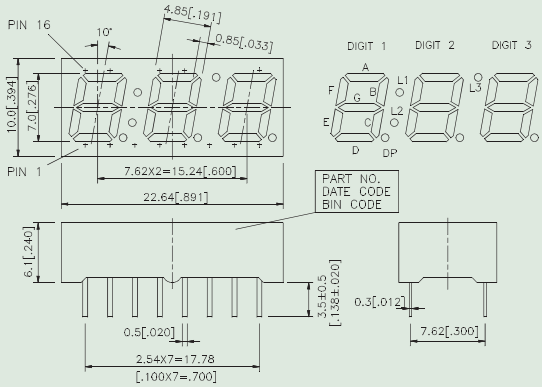

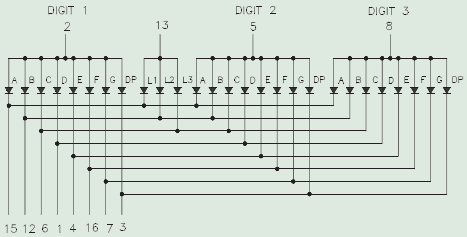

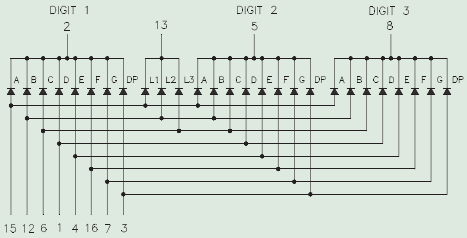

Part No.	Color(λ d)	Description	Typ.Iv/Seg @ IF=1mA
LTC-2621JD	AlInGaP Hyper Red (639nm)	Multiplex Common Anode, Rt. Hand Decimal	600 μcd
LTC-2621JG	AlInGaP Green (572nm)	Multiplex Common Anode, Rt. Hand Decimal	800 μcd
LTC-2621KF	AlInGaP Yellow Orange (605nm)	Multiplex Common Anode, Rt. Hand Decimal	1200 μcd
LTC-2621KS	AlInGaP Yellow (587nm)	Multiplex Common Anode, Rt. Hand Decimal	800 μcd
LTC-2621JR	AlInGaP Super Red (631nm)	Multiplex Common Anode, Rt. Hand Decimal	600 μcd
LTC-2621CB	InGaN Blue (470nm)	Multiplex Common Anode, Rt. Hand Decimal	600 μcd
LTC-2721JD	AlInGaP Hyper Red (639nm)	Multiplex Common Cathode, Rt. Hand Decimal	600 μcd
LTC-2721JG	AlInGaP Green (572nm)	Multiplex Common Cathode, Rt. Hand Decimal	800 μcd
LTC-2721KF	AlInGaP Yellow Orange (605nm)	Multiplex Common Cathode, Rt. Hand Decimal	1200 μcd
LTC-2721KS	AlInGaP Yellow (587nm)	Multiplex Common Cathode, Rt. Hand Decimal	800 μcd
LTC-2721KR	AlInGaP Super Red (631nm)	Multiplex Common Cathode, Rt. Hand Decimal	600 μcd
LTC-2721CB	InGaN Blue (470nm)	Multiplex Common Cathode, Rt. Hand Decimal	600 μcd

Three-Digits Numeric LED Displays

10.0mm (.40")
Dual-In-Line
.5"H x 1.18"W x .276"D

10.0mm (.40")
Dual-In-Line
.5"H x 1.18"W x .276"D

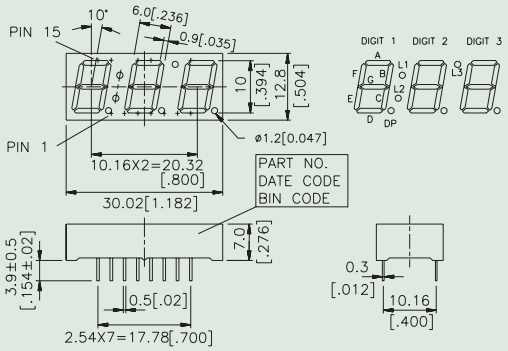

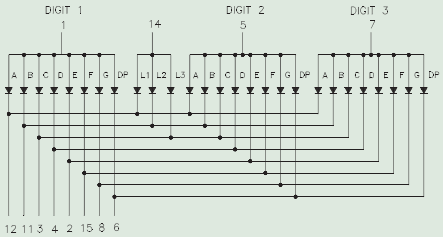

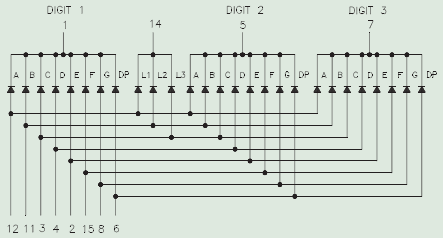

Part No.	Color(λ d)	Description	Typ.Iv/Seg @ IF=1mA
LTC-4624JD	AlInGaP Hyper Red (639nm)	Multiplex Common Anode, Rt. Hand Decimal	650 µcd
LTC-4624JG	AlInGaP Green (572nm)	Multiplex Common Anode, Rt. Hand Decimal	850 µcd
LTC-4624KF	AlInGaP Yellow Orange (605nm)	Multiplex Common Anode, Rt. Hand Decimal	1300 µcd
LTC-4624KS	AlInGaP Yellow (587nm)	Multiplex Common Anode, Rt. Hand Decimal	850 µcd
LTC-4624JR	AlInGaP Super Red (631nm)	Multiplex Common Anode, Rt. Hand Decimal	650 µcd
LTC-4624CB	InGaN Blue (470nm)	Multiplex Common Anode, Rt. Hand Decimal	650 µcd
LTC-4724JD	AlInGaP Hyper Red (639nm)	Multiplex Common Cathode, Rt. Hand Decimal	650 µcd
LTC-4724JG	AlInGaP Green (572nm)	Multiplex Common Cathode, Rt. Hand Decimal	850 µcd
LTC-4724KF	AlInGaP Yellow Orange (605nm)	Multiplex Common Cathode, Rt. Hand Decimal	1300 µcd
LTC-4724KS	AlInGaP Yellow (587nm)	Multiplex Common Cathode, Rt. Hand Decimal	850 µcd
LTC-4724KR	AlInGaP Super Red (631nm)	Multiplex Common Cathode, Rt. Hand Decimal	650 µcd
LTC-4724CB	InGaN Blue (470nm)	Multiplex Common Cathode, Rt. Hand Decimal	650 µcd

LED Display

Three-Digits Numeric LED Displays

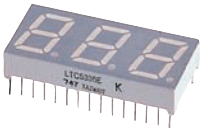

13.2mm (.52")
Dual-In-Line
.7"H x 1.5"W x .28"D

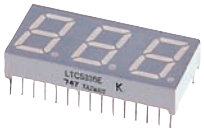

13.2mm (.52")
Dual-In-Line
.7"H x 1.5"W x .28"D

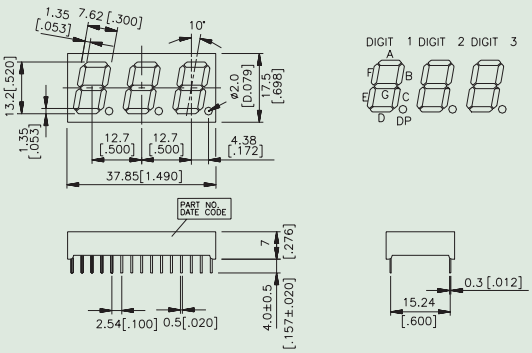

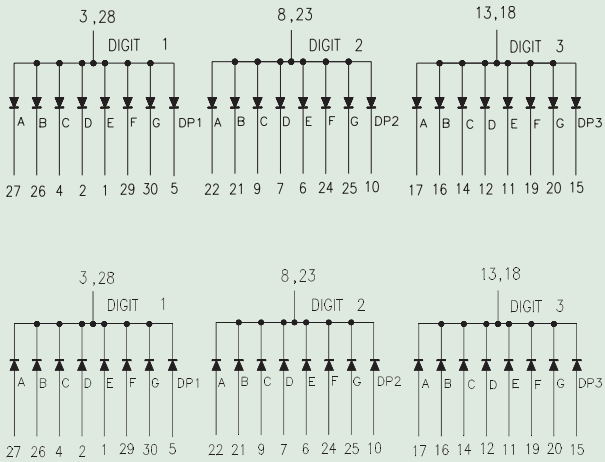

Part No.	Color(λ d)	Description	Typ.Iv/Seg @ IF=1mA
LTC-5836JD	AlInGaP Hyper Red (639nm)	Common Anode, Rt. Hand Decimal	700 µcd
LTC-5836JG	AlInGaP Green (572nm)	Common Anode, Rt. Hand Decimal	900 µcd
LTC-5836KF	AlInGaP Yellow Orange (605nm)	Common Anode, Rt. Hand Decimal	1600 µcd
LTC-5836KS	AlInGaP Yellow (587nm)	Common Anode, Rt. Hand Decimal	900 µcd
LTC-5836KR	AlInGaP Super Red (631nm)	Common Anode, Rt. Hand Decimal	700 µcd
LTC-5836CB	InGaN Blue (470nm)	Common Anode, Rt. Hand Decimal	750 µcd
LTC-5336JD	AlInGaP Hyper Red (639nm)	Common Cathode, Rt. Hand Decimal	700 µcd
LTC-5336JG	AlInGaP Green (572nm)	Common Cathode, Rt. Hand Decimal	900 µcd
LTC-5336KF	AlInGaP Yellow Orange (605nm)	Common Cathode, Rt. Hand Decimal	1600 µcd
LTC-5336KS	AlInGaP Yellow (587nm)	Common Cathode, Rt. Hand Decimal	900 µcd
LTC-5336KR	AlInGaP Super Red (631nm)	Common Cathode, Rt. Hand Decimal	700 µcd
LTC-5336CB	InGaN Blue (470nm)	Common Cathode, Rt. Hand Decimal	750 µcd

Three-Digits Numeric LED Displays

14.22mm (.56")
Dual-In-Line
.75"H x 1.5"W x .32"D

14.22mm (.56")
Dual-In-Line
.75"H x 1.5"W x .32"D

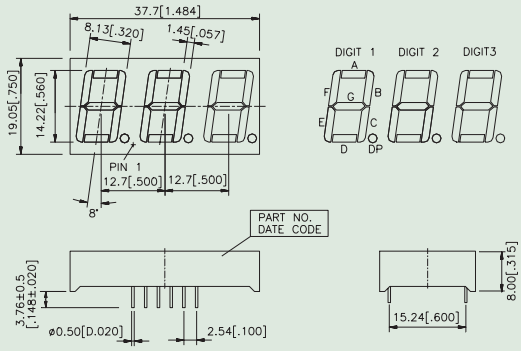

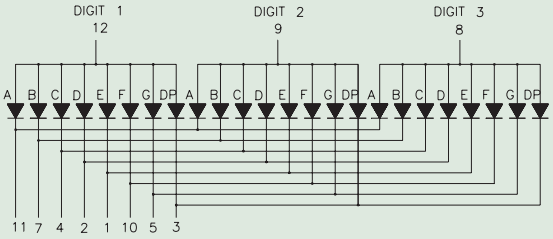

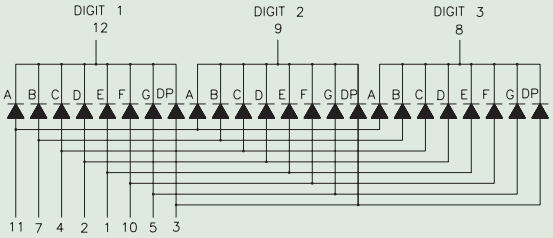

Part No.	Color(λ d)	Description	Typ.Iv/Seg @ IF=1mA
LTC-561JD	AlInGaP Hyper Red (639nm)	Multiplex Common Anode, Rt. Hand Decimal	700 μcd
LTC-561JG	AlInGaP Green (572nm)	Multiplex Common Anode, Rt. Hand Decimal	900 μcd
LTC-561KF	AlInGaP Yellow Orange (605nm)	Multiplex Common Anode, Rt. Hand Decimal	1600 μcd
LTC-561KS	AlInGaP Yellow (587nm)	Multiplex Common Anode, Rt. Hand Decimal	900 μcd
LTC-561KR	AlInGaP Super Red (631nm)	Multiplex Common Anode, Rt. Hand Decimal	700 μcd
LTC-561CB	InGaN Blue (470nm)	Multiplex Common Anode, Rt. Hand Decimal	750 μcd
LTC-571JD	AlInGaP Hyper Red (639nm)	Multiplex Common Cathode, Rt. Hand Decimal	700 μcd
LTC-571JG	AlInGaP Green (572nm)	Multiplex Common Cathode, Rt. Hand Decimal	900 μcd
LTC-571KF	AlInGaP Yellow Orange (605nm)	Multiplex Common Cathode, Rt. Hand Decimal	1600 μcd
LTC-571KS	AlInGaP Yellow (587nm)	Multiplex Common Cathode, Rt. Hand Decimal	900 μcd
LTC-571KR	AlInGaP Super Red (631nm)	Multiplex Common Cathode, Rt. Hand Decimal	700 μcd
LTC-571CB	InGaN Blue (470nm)	Multiplex Common Cathode, Rt. Hand Decimal	750 μcd

LED Display

Four-Digits Numeric LED Displays

Epoxy Type

7.62mm (.30")
Dual-In-Line
.52"H x 1.2"W x .28"D

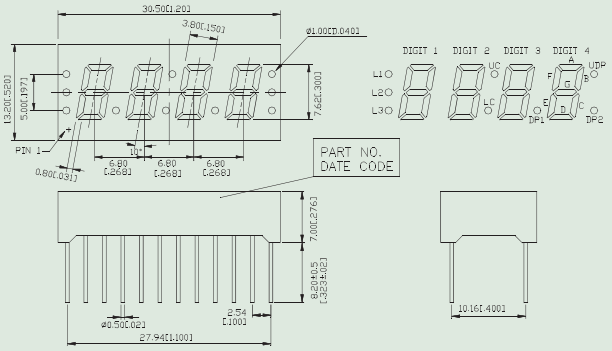

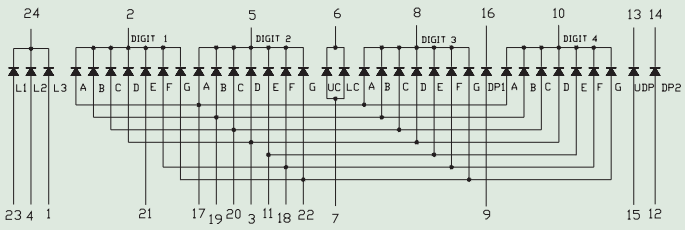

Part No.	Color(λ d)	Description	Typ.Iv/Seg @ IF=1mA
LTC-3710KD	AlInGaP Red (640nm)	Multiplex Common Cathode, Full Feature	600 μcd
LTC-3710JG	AlInGaP Green (572nm)	Multiplex Common Cathode, Full Feature	800 μcd

Four-Digits Numeric LED Displays

Epoxy Type

8.5mm (.34")
Dual-In-Line
.54"H x 1.38"W x .24"D

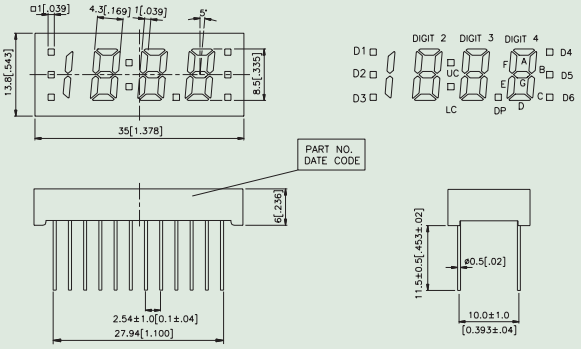

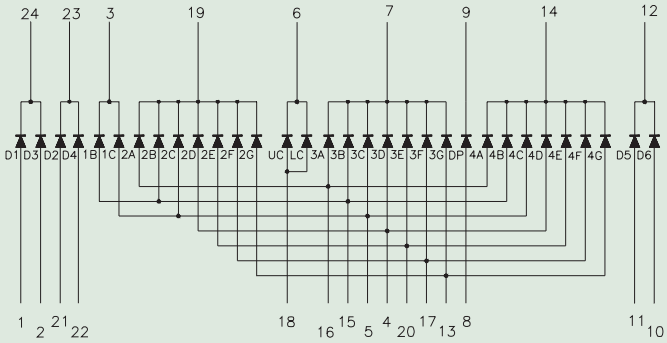

Part No.	Color(λ d)	Description	Typ.Iv/Seg @ IF=1mA
LTC-3718KD	AlInGaP Red (640nm)	Multiplex Common Cathode, Full Feature	640 μcd
LTC-3718JG	AlInGaP Green (572nm)	Multiplex Common Cathode, Full Feature	850 μcd

Four-Digits Numeric LED Displays

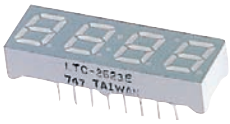

7.0mm (.28")
Dual-In-Line
.39"H x 1.19"W x .24"D

7.0mm (.28")
Dual-In-Line
.39"H x 1.19"W x .24"D

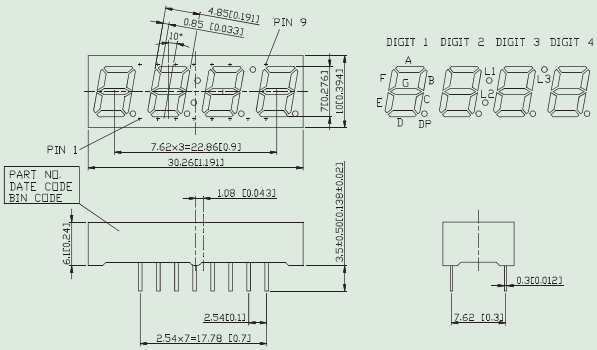

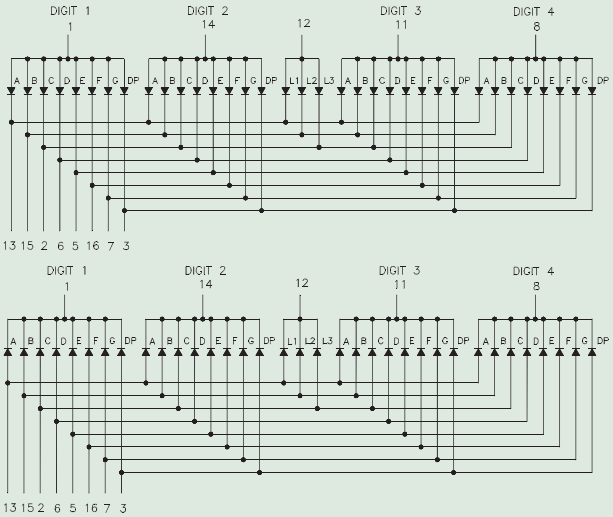

Part No.	Color(λ d)	Description	Typ.Iv/Seg @ IF=1mA
LTC-2623JD	AlInGaP Hyper Red (639nm)	Multiplex Common Anode, Rt. Hand Decimal	600 μcd
LTC-2623JG	AlInGaP Green (572nm)	Multiplex Common Anode, Rt. Hand Decimal	800 μcd
LTC-2623JF	AlInGaP Yellow Orange (605nm)	Multiplex Common Anode, Rt. Hand Decimal	1200 μcd
LTC-2623JS	AlInGaP Yellow (587nm)	Multiplex Common Anode, Rt. Hand Decimal	800 μcd
LTC-2623JR	AlInGaP Super Red (631nm)	Multiplex Common Anode, Rt. Hand Decimal	600 μcd
LTC-2623CB	InGaN Blue (470nm)	Multiplex Common Anode, Rt. Hand Decimal	600 μcd
LTC-2723JD	AlInGaP Hyper Red (639nm)	Multiplex Common Cathode, Rt. Hand Decimal	600 μcd
LTC-2723JG	AlInGaP Green (572nm)	Multiplex Common Cathode, Rt. Hand Decimal	800 μcd
LTC-2723JF	AlInGaP Yellow Orange (605nm)	Multiplex Common Cathode, Rt. Hand Decimal	1200 μcd
LTC-2723JS	AlInGaP Yellow (587nm)	Multiplex Common Cathode, Rt. Hand Decimal	800 μcd
LTC-2723R	AlInGaP Super Red (631nm)	Multiplex Common Cathode, Rt. Hand Decimal	600 μcd
LTC-2723CB	InGaN Blue (470nm)	Multiplex Common Cathode, Rt. Hand Decimal	600 μcd

Four-Digits Numeric LED Displays

10.0mm (.40")
Dual-In-Line
.5"H x 1.58"W x .28"D

10.0mm (.40")
Dual-In-Line
.5"H x 1.58"W x .28"D

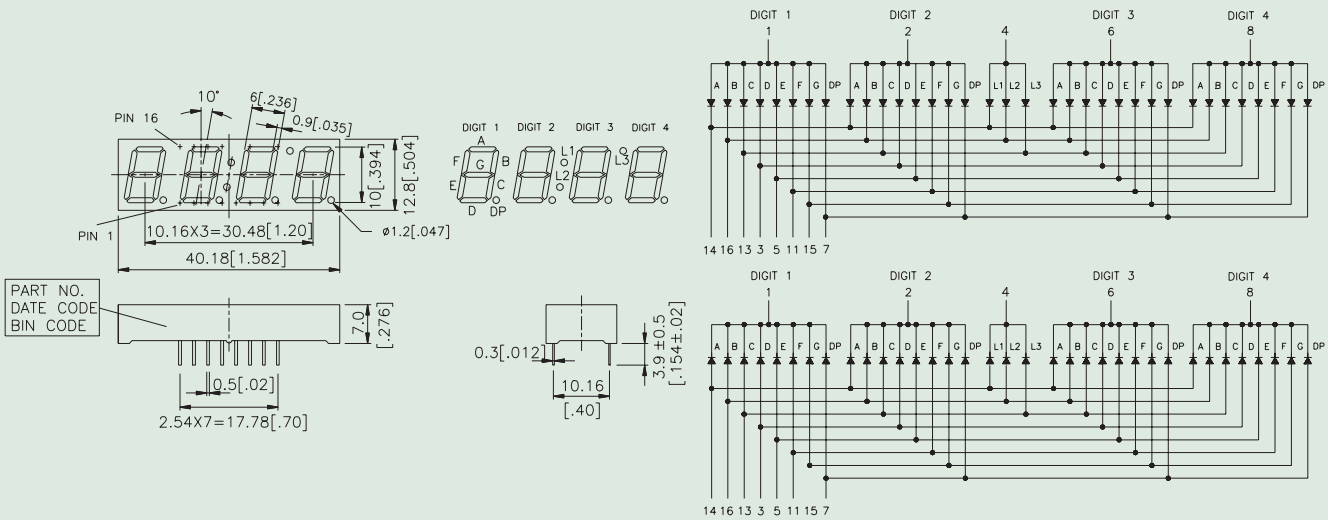

Part No.	Color(λ d)	Description	Typ.Iv/Seg @ IF=1mA
LTC-4627JD	AlInGaP Hyper Red (639nm)	Multiplex Common Anode, Rt. Hand Decimal	650 µcd
LTC-4627JG	AlInGaP Green (572nm)	Multiplex Common Anode, Rt. Hand Decimal	850 µcd
LTC-4627JF	AlInGaP Yellow Orange (605nm)	Multiplex Common Anode, Rt. Hand Decimal	1300 µcd
LTC-4627JS	AlInGaP Yellow (587nm)	Multiplex Common Anode, Rt. Hand Decimal	850 µcd
LTC-4627JR	AlInGaP Super Red (631nm)	Multiplex Common Anode, Rt. Hand Decimal	650 µcd
LTC-4627CB	InGaN Blue (470nm)	Multiplex Common Anode, Rt. Hand Decimal	650 µcd
LTC-4727JD	AlInGaP Hyper Red (639nm)	Multiplex Common Cathode, Rt. Hand Decimal	650 µcd
LTC-4727JG	AlInGaP Green (572nm)	Multiplex Common Cathode, Rt. Hand Decimal	850 µcd
LTC-4727JF	AlInGaP Yellow Orange (605nm)	Multiplex Common Cathode, Rt. Hand Decimal	1300 µcd
LTC-4727JS	AlInGaP Yellow (587nm)	Multiplex Common Cathode, Rt. Hand Decimal	850 µcd
LTC-4727JR	AlInGaP Super Red (631nm)	Multiplex Common Cathode, Rt. Hand Decimal	650 µcd
LTC-4727CB	InGaN Blue (470nm)	Multiplex Common Cathode, Rt. Hand Decimal	650 µcd

Four-Digits Numeric LED Displays

13.2mm (.52")
Dual-In-Line
.7"H x 2.0"W x .28"D

13.2mm (.52")
Dual-In-Line
.7"H x 2.0"W x .28"D

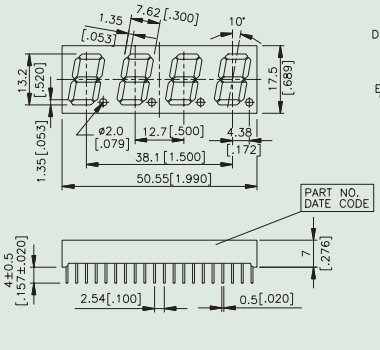

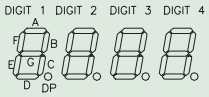

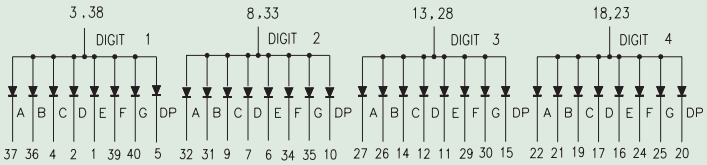

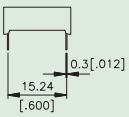

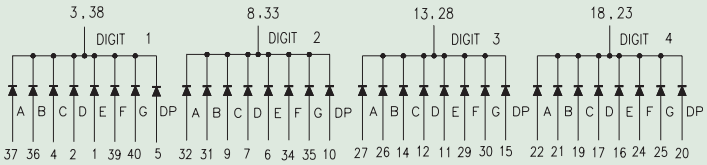

Part No.	Color(λ d)	Description	Typ.Iv/Seg @ IF=1mA
LTC-5837JD	AlInGaP Hyper Red (639nm)	Common Anode, Rt. Hand Decimal	700 µcd
LTC-5837JG	AlInGaP Green (572nm)	Common Anode, Rt. Hand Decimal	900 µcd
LTC-5837KF	AlInGaP Yellow Orange (605nm)	Common Anode, Rt. Hand Decimal	1600 µcd
LTC-5837KS	AlInGaP Yellow (587nm)	Common Anode, Rt. Hand Decimal	900 µcd
LTC-5837KR	AlInGaP Super Red (631nm)	Common Anode, Rt. Hand Decimal	700 µcd
LTC-5837CB	InGaN Blue (470nm)	Common Anode, Rt. Hand Decimal	750 µcd
LTC-5337JD	AlInGaP Hyper Red (639nm)	Common Cathode, Rt. Hand Decimal	700 µcd
LTC-5337JG	AlInGaP Green (572nm)	Common Cathode, Rt. Hand Decimal	900 µcd
LTC-5337KF	AlInGaP Yellow Orange (605nm)	Common Cathode, Rt. Hand Decimal	1600 µcd
LTC-5337KS	AlInGaP Yellow (587nm)	Common Cathode, Rt. Hand Decimal	900 µcd
LTC-5337KR	AlInGaP Super Red (631nm)	Common Cathode, Rt. Hand Decimal	700 µcd
LTC-5337CB	InGaN Blue (470nm)	Common Cathode, Rt. Hand Decimal	750 µcd

Four-Digits Numeric LED Displays

14.22mm (.56")
Dual-In-Line
.75"H x 1.98"W x .32"D

14.22mm (.56")
Dual-In-Line
.75"H x 1.98"W x .32"D

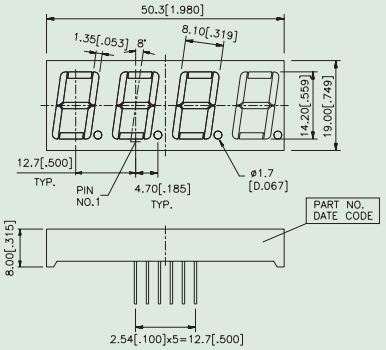

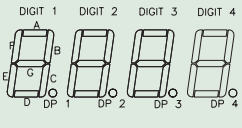

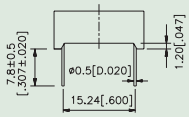

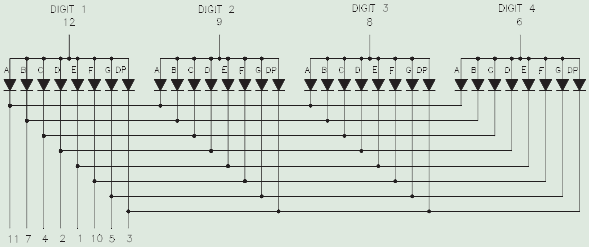

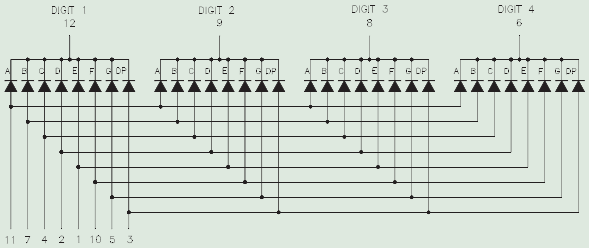

Part No.	Color(λ d)	Description	Typ.Iv/Seg @ IF=1mA
LTC-5623JD	AlInGaP Hyper Red (639nm)	Multiplex Common Anode, Rt. Hand Decimal	700 µcd
LTC-5623JG	AlInGaP Green (572nm)	Multiplex Common Anode, Rt. Hand Decimal	900 µcd
LTC-5623KF	AlInGaP Yellow Orange (605nm)	Multiplex Common Anode, Rt. Hand Decimal	1600 µcd
LTC-5623KS	AlInGaP Yellow (587nm)	Multiplex Common Anode, Rt. Hand Decimal	900 µcd
LTC-5623KR	AlInGaP Super Red (631nm)	Multiplex Common Anode, Rt. Hand Decimal	700 µcd
LTC-5623CB	InGaN Blue (470nm)	Multiplex Common Anode, Rt. Hand Decimal	700 µcd
LTC-5723JD	AlInGaP Hyper Red (639nm)	Multiplex Common Cathode, Rt. Hand Decimal	700 µcd
LTC-5723JG	AlInGaP Green (572nm)	Multiplex Common Cathode, Rt. Hand Decimal	900 µcd
LTC-5723KF	AlInGaP Yellow Orange (605nm)	Multiplex Common Cathode, Rt. Hand Decimal	1600 µcd
LTC-5723KS	AlInGaP Yellow (587nm)	Multiplex Common Cathode, Rt. Hand Decimal	900 µcd
LTC-5723KR	AlInGaP Super Red (631nm)	Multiplex Common Cathode, Rt. Hand Decimal	700 µcd
LTC-5723CB	InGaN Blue (470nm)	Multiplex Common Cathode, Rt. Hand Decimal	700 µcd

Four-Digits Numeric LED Displays

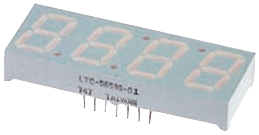

14.22mm (.56")
Dual-In-Line
.75"H x 1.98"W x .32"D

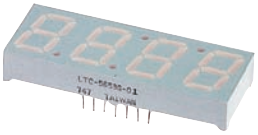

14.22mm (.56")
Dual-In-Line
.75"H x 1.98"W x .32"D

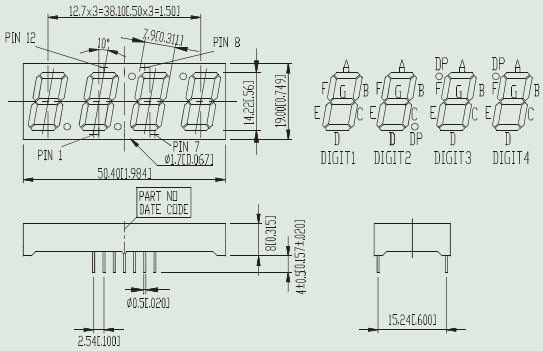

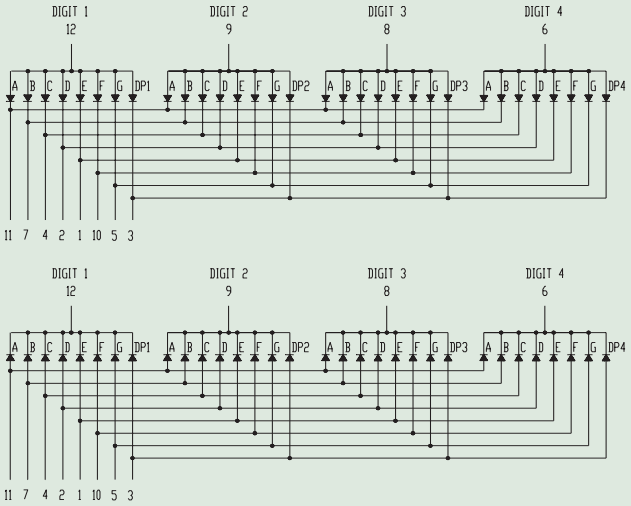

Part No.	Color(λ d)	Description	Typ.Iv/Seg @ IF=1mA
LTC-5653JD-01	AlInGaP Hyper Red (639nm)	Multiplex Common Anode, Rt. Hand Decimal	700 µcd
LTC-5653JG-01	AlInGaP Green (572nm)	Multiplex Common Anode, Rt. Hand Decimal	900 µcd
LTC-5653JF-01	AlInGaP Yellow Orange (605nm)	Multiplex Common Anode, Rt. Hand Decimal	1600 µcd
LTC-5653JS-01	AlInGaP Yellow (587nm)	Multiplex Common Anode, Rt. Hand Decimal	900 µcd
LTC-5653JR-01	AlInGaP Super Red (631nm)	Multiplex Common Anode, Rt. Hand Decimal	700 µcd
LTC-5653CB	InGaN Blue (470nm)	Multiplex Common Anode, Rt. Hand Decimal	700 µcd
LTC-5753JD-01	AlInGaP Hyper Red (639nm)	Multiplex Common Cathode, Rt. Hand Decimal	700 µcd
LTC-5753JG-01	AlInGaP Green (572nm)	Multiplex Common Cathode, Rt. Hand Decimal	900 µcd
LTC-5753JF-01	AlInGaP Yellow Orange (605nm)	Multiplex Common Cathode, Rt. Hand Decimal	1600 µcd
LTC-5753JS-01	AlInGaP Yellow (587nm)	Multiplex Common Cathode, Rt. Hand Decimal	900 µcd
LTC-5753JR-01	AlInGaP Super Red (631nm)	Multiplex Common Cathode, Rt. Hand Decimal	700 µcd
LTC-5753CB	InGaN Blue (470nm)	Multiplex Common Cathode, Rt. Hand Decimal	700 µcd

LED Display

Alphanumeric LED Displays

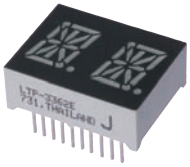

7.62mm (.3")
Dual-In-Line
.51"H x .67"W x .24"D

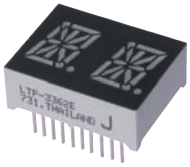

7.62mm (.3")
Dual-In-Line
.51"H x .67"W x .24"D

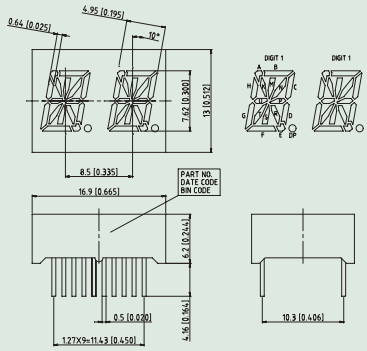

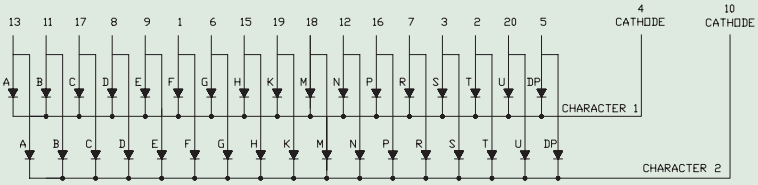

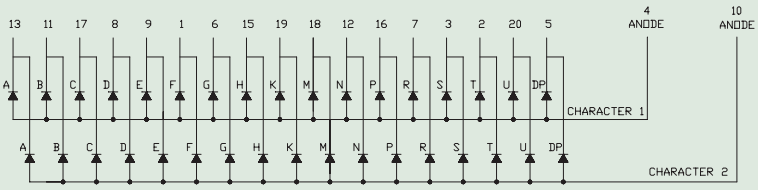

Part No.	Color(λ d)	Description	Typ.Iv/Seg @ IF=1mA
LTP-3362JD	AlInGaP Hyper Red (639nm)	Common Cathode, Duplex, Dual Character, Rt. Hand Decimal	600 μcd
LTP-3362JG	AlInGaP Green (572nm)	Common Cathode, Duplex, Dual Character, Rt. Hand Decimal	800 μcd
LTP-3362JF	AlInGaP Yellow Orange (605nm)	Common Cathode, Duplex, Dual Character, Rt. Hand Decimal	1200 μcd
LTP-3362JS	AlInGaP Yellow (587nm)	Common Cathode, Duplex, Dual Character, Rt. Hand Decimal	800 μcd
LTP-3362JR	AlInGaP Super Red (631nm)	Common Cathode, Duplex, Dual Character, Rt. Hand Decimal	600 μcd
LTP-3862JD	AlInGaP Hyper Red (639nm)	Common Anode, Duplex, Dual Character, Rt. Hand Decimal	600 μcd
LTP-3862JG	AlInGaP Green (572nm)	Common Anode, Duplex, Dual Character, Rt. Hand Decimal	800 μcd
LTP-3862JF	AlInGaP Yellow Orange (605nm)	Common Anode, Duplex, Dual Character, Rt. Hand Decimal	1200 μcd
LTP-3862JS	AlInGaP Yellow (587nm)	Common Anode, Duplex, Dual Character, Rt. Hand Decimal	800 μcd
LTP-3862JR	AlInGaP Super Red (631nm)	Common Anode, Duplex, Dual Character, Rt. Hand Decimal	600 μcd

Alphanumeric LED Displays

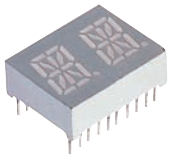

10.4mm (.4")
Dual-In-Line
.63"H x .8"W x .28"D

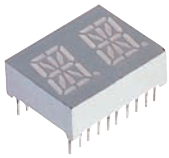

10.4mm (.4")
Dual-In-Line
.63"H x .8"W x .28"D

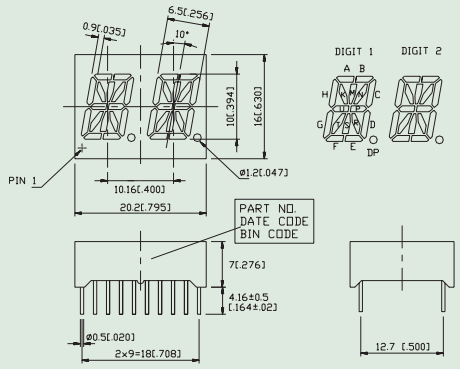

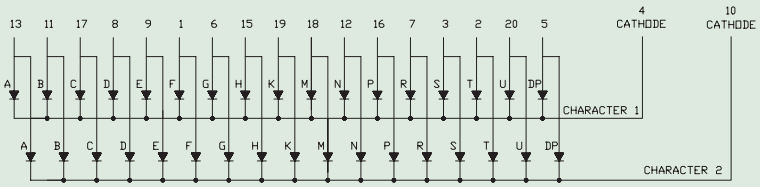

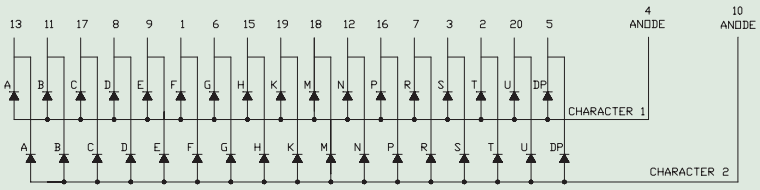

Part No.	Color(λ d)	Description	Typ.Iv/Seg @ IF=1mA
LTP-4323JD	AlInGaP Hyper Red (639nm)	Common Cathode, Duplex, Dual Character, Rt. Hand Decimal	650 μcd
LTP-4323JG	AlInGaP Green (572nm)	Common Cathode, Duplex, Dual Character, Rt. Hand Decimal	850 μcd
LTP-4323KF	AlInGaP Yellow Orange (605nm)	Common Cathode, Duplex, Dual Character, Rt. Hand Decimal	1300 μcd
LTP-4323KS	AlInGaP Yellow (587nm)	Common Cathode, Duplex, Dual Character, Rt. Hand Decimal	850 μcd
LTP-4323KR	AlInGaP Super Red (631nm)	Common Cathode, Duplex, Dual Character, Rt. Hand Decimal	650 μcd
LTP-4823JD	AlInGaP Hyper Red (639nm)	Common Anode, Duplex, Dual Character, Rt. Hand Decimal	650 μcd
LTP-4823JG	AlInGaP Green (572nm)	Common Anode, Duplex, Dual Character, Rt. Hand Decimal	850 μcd
LTP-4823KF	AlInGaP Yellow Orange (605nm)	Common Anode, Duplex, Dual Character, Rt. Hand Decimal	1300 μcd
LTP-4823KS	AlInGaP Yellow (587nm)	Common Anode, Duplex, Dual Character, Rt. Hand Decimal	850 μcd
LTP-4823KR	AlInGaP Super Red (631nm)	Common Anode, Duplex, Dual Character, Rt. Hand Decimal	650 μcd

LED Display

Alphanumeric LED Displays

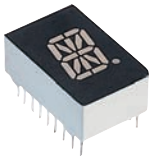

12.7mm (.5")
Dual-In-Line
1"H x .63"W x .38"D

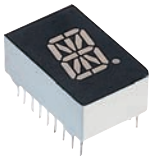

12.7mm (.5")
Dual-In-Line
1"H x .63"W x .38"D

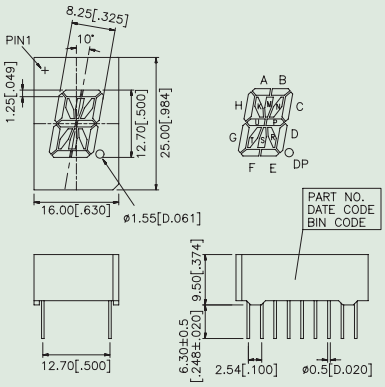

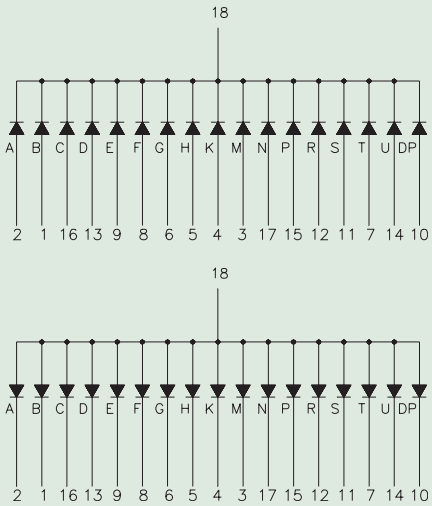

Part No.	Color(λ d)	Description	Typ.Iv/Seg @ IF=1mA
LTP-537JD	AlInGaP Hyper Red (639nm)	Common Cathode, Single, Dual Character, Rt. Hand Decimal	700 µcd
LTP-537JG	AlInGaP Green (572nm)	Common Cathode, Single, Dual Character, Rt. Hand Decimal	900 µcd
LTP-537KF	AlInGaP Yellow Orange (605nm)	Common Cathode, Single, Dual Character, Rt. Hand Decimal	1600 µcd
LTP-537KS	AlInGaP Yellow (587nm)	Common Cathode, Single, Dual Character, Rt. Hand Decimal	900 µcd
LTP-537KR	AlInGaP Super Red (631nm)	Common Cathode, Single, Dual Character, Rt. Hand Decimal	700 µcd
LTP-587JD	AlInGaP Hyper Red (639nm)	Common Anode, Single, Dual Character, Rt. Hand Decimal	700 µcd
LTP-587JG	AlInGaP Green (572nm)	Common Anode, Single, Dual Character, Rt. Hand Decimal	900 µcd
LTP-587KF	AlInGaP Yellow Orange (605nm)	Common Anode, Single, Dual Character, Rt. Hand Decimal	1600 µcd
LTP-587KS	AlInGaP Yellow (587nm)	Common Anode, Single, Dual Character, Rt. Hand Decimal	900 µcd
LTP-587KR	AlInGaP Super Red (631nm)	Common Anode, Single, Dual Character, Rt. Hand Decimal	700 µcd

Alphanumeric LED Displays

13.8mm (.54")
Dual-In-Line
.84"H x 1"W x .32"D

13.8mm (.54")
Dual-In-Line
.84"H x 1"W x .32"D

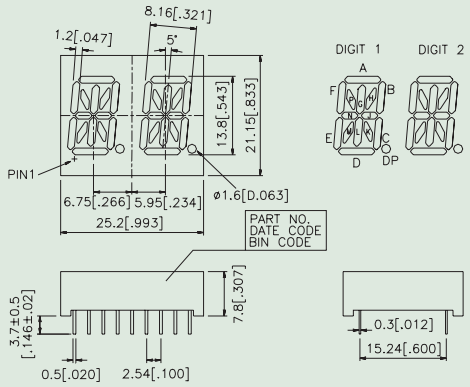

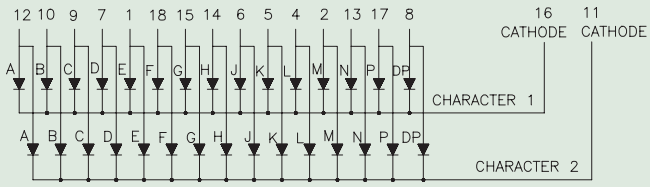

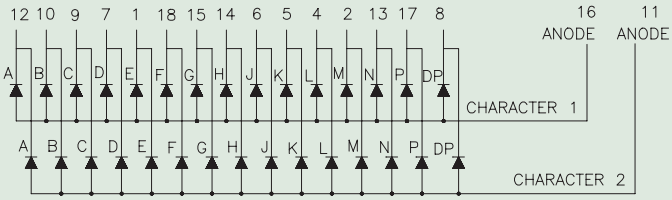

Part No.	Color(λ d)	Description	Typ.Iv/Seg @ IF=1mA
LTP-3784JD-01	AlInGaP Hyper Red (639nm)	Common Cathode, Duplex, Dual Character, Rt. Hand Decimal	700 μcd
LTP-3784JG-01	AlInGaP Green (572nm)	Common Cathode, Duplex, Dual Character, Rt. Hand Decimal	900 μcd
LTP-3784KF-01	AlInGaP Yellow Orange (605nm)	Common Cathode, Duplex, Dual Character, Rt. Hand Decimal	1600 μcd
LTP-3784KS-01	AlInGaP Yellow (587nm)	Common Cathode, Duplex, Dual Character, Rt. Hand Decimal	900 μcd
LTP-3784KR-01	AlInGaP Super Red (631nm)	Common Cathode, Duplex, Dual Character, Rt. Hand Decimal	700 μcd
LTP-3786JD-01	AlInGaP Hyper Red (639nm)	Common Anode, Duplex, Dual Character, Rt. Hand Decimal	700 μcd
LTP-3786JG-01	AlInGaP Green (572nm)	Common Anode, Duplex, Dual Character, Rt. Hand Decimal	900 μcd
LTP-3786KF-01	AlInGaP Yellow Orange (605nm)	Common Anode, Duplex, Dual Character, Rt. Hand Decimal	1600 μcd
LTP-3786KS-01	AlInGaP Yellow (587nm)	Common Anode, Duplex, Dual Character, Rt. Hand Decimal	900 μcd
LTP-3786KR-01	AlInGaP Super Red (631nm)	Common Anode, Duplex, Dual Character, Rt. Hand Decimal	700 μcd

4 X 4 Full Color Dot Matrix LED Displays

50.4mm (9 ϕ)
Dual-In-Line
2.0"H x 2.0"W x .34"D

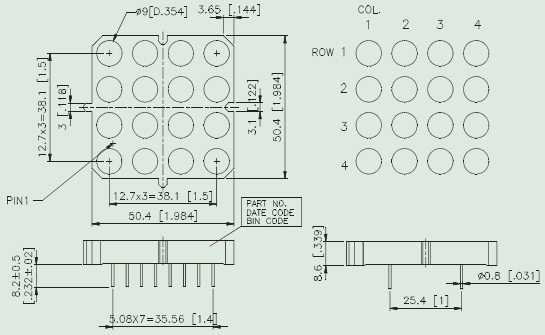

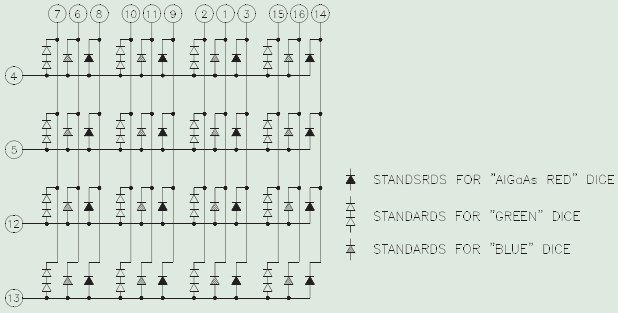

Part No.	Color(λ d)	Description	Typ.Iv/Dot @ IP=20mA 1/4 Duty
LTP-2C44F-01	AlGaAs Red (638nm)	Anode Row, Cathode Column	6000 μcd
LTP-2C44F-01	Green (569nm)	Anode Row, Cathode Column	8500 μcd
LTP-2C44F-01	Blue (466nm)	Anode Row, Cathode Column	2300 μcd

5 X 7 Single Color Dot Matrix LED Displays

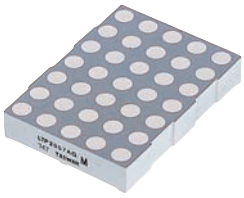

53mm (5 ϕ)
Dual-In-Line
2.1"H x 1.5"W x .34"D

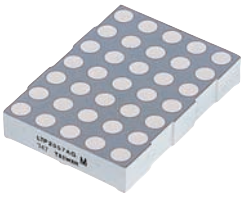

53mm (5 ϕ)
Dual-In-Line
2.1"H x 1.5"W x .34"D

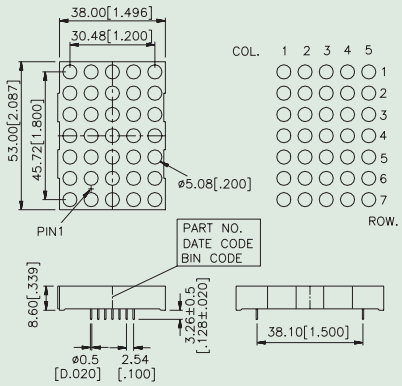

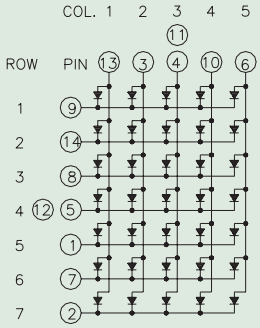

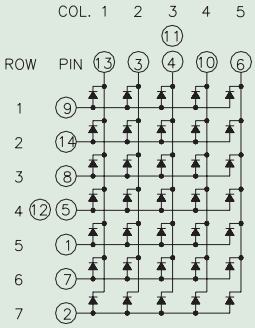

Part No.	Color(λ d)	Description	Typ.Iv/Dot @ IP=32mA 1/16 Duty
LTP-2057AKY	AlInGaP Amber Yellows (592nm)	Anode Column, Cathode Row	4600 µcd
LTP-2057AKA	AlInGaP Super Orange (615nm)	Anode Column, Cathode Row	4600 µcd
LTP-2057AKR	AlInGaP Super Red (631nm)	Anode Column, Cathode Row	3500 µcd
LTP-2157AKY	AlInGaP Amber Yellows (592nm)	Cathode Column, Anode Row	4600 µcd
LTP-2157AKA	AlInGaP Super Orange (615nm)	Cathode Column, Anode Row	4600 µcd
LTP-2157AKR	AlInGaP Super Red (631nm)	Cathode Column, Anode Row	3500 µcd

LED Display

5 X 7 Single Color Dot Matrix LED Displays

31.79mm (3 ϕ)
Dual-In-Line
1.25"H x .9"W x .31"D

31.79mm (3 ϕ)
Dual-In-Line
1.25"H x .9"W x .31"D

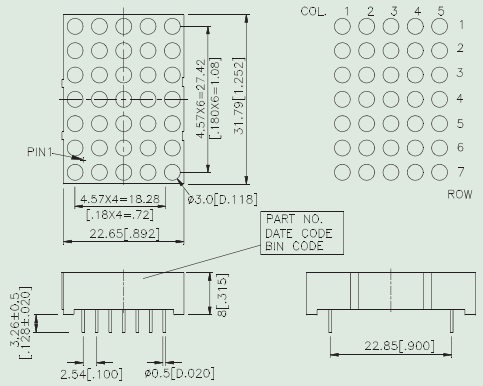

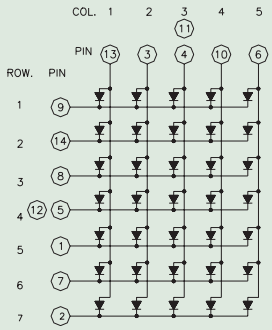

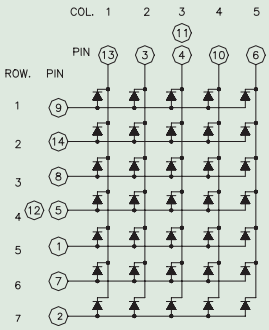

Part No.	Color(λ d)	Description	Typ.Iv/Dot @ IP=32mA 1/16 Duty
LTP-1457KD	AlInGaP Hyper Red (639nm)	Anode Column, Cathode Row	4500 μcd
LTP-1457KG	AlInGaP Green (572nm)	Anode Column, Cathode Row	4500 μcd
LTP-1457KF	AlInGaP Yellows Orange (605nm)	Anode Column, Cathode Row	4500 μcd
LTP-1457KS	AlInGaP Yellows (587nm)	Anode Column, Cathode Row	4500 μcd
LTP-1457KR	AlInGaP Super Red (631nm)	Anode Column, Cathode Row	4500 μcd
LTP-1557KD	AlInGaP Hyper Red (639nm)	Cathode Column, Anode Row	4500 μcd
LTP-1557KG	AlInGaP Green (572nm)	Cathode Column, Anode Row	4500 μcd
LTP-1557KF	AlInGaP Yellows Orange (605nm)	Cathode Column, Anode Row	4500 μcd
LTP-1557KS	AlInGaP Yellows (587nm)	Cathode Column, Anode Row	4500 μcd
LTP-1557KR	AlInGaP Super Red (631nm)	Cathode Column, Anode Row	4500 μcd

5 X 7 Single Color Dot Matrix LED Displays

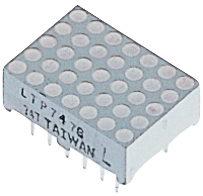

17.74mm (2 ϕ)
Dual-In-Line
.7"H x .5"W x .25"D

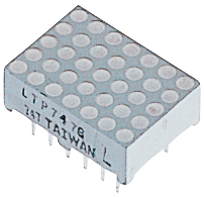

17.74mm (2 ϕ)
Dual-In-Line
.7"H x .5"W x .25"D

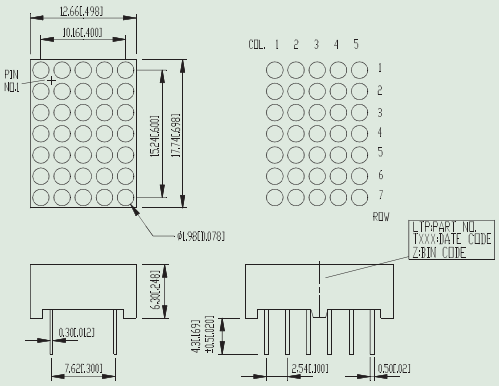

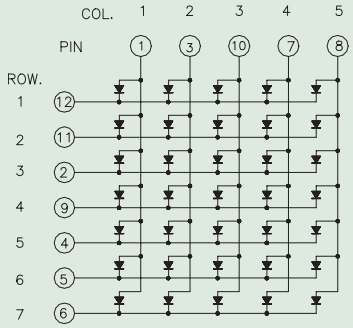

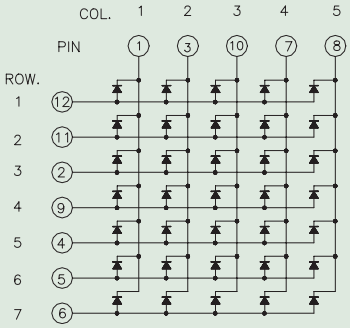

Part No.	Color(λ d)	Description	Typ.Iv/Dot @ IP=32mA 1/16 Duty
LTP-747KD	AlInGaP Hyper Red (639nm)	Anode Column, Cathode Row	2300 µcd
LTP-747KG	AlInGaP Green (572nm)	Anode Column, Cathode Row	2300 µcd
LTP-747KF	AlInGaP Yellows Orange (605nm)	Anode Column, Cathode Row	2300 µcd
LTP-747KS	AlInGaP Yellows (587nm)	Anode Column, Cathode Row	2300 µcd
LTP-747KR	AlInGaP Super Red (631nm)	Anode Column, Cathode Row	2300 µcd
LTP-757KD	AlInGaP Hyper Red (639nm)	Cathode Column, Anode Row	2300 µcd
LTP-757KG	AlInGaP Green (572nm)	Cathode Column, Anode Row	2300 µcd
LTP-757KF	AlInGaP Yellows Orange (605nm)	Cathode Column, Anode Row	2300 µcd
LTP-757KS	AlInGaP Yellows (587nm)	Cathode Column, Anode Row	2300 µcd
LTP-757KR	AlInGaP Super Red (631nm)	Cathode Column, Anode Row	2300 µcd

5 X 7 Multicolor Dot Matrix LED Displays

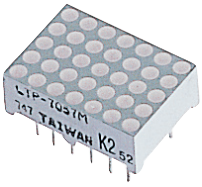

17.74mm (2 ϕ)
Dual-In-Line
.7"H x .5"W x .25"D

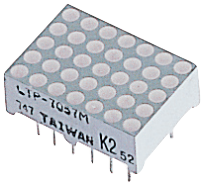

17.74mm (2 ϕ)
Dual-In-Line
.7"H x .5"W x .25"D

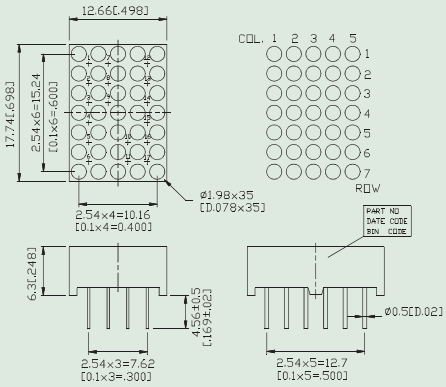

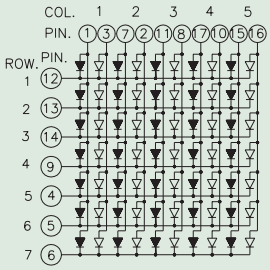

NOTES: THE " ▷ " STANDS FOR GREEN CHIPS.
THE " ▲ " STANDS FOR RED ORANGE CHIPS.

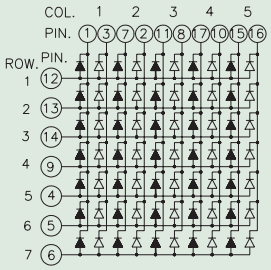

NOTES: THE " ▷ " STANDS FOR GREEN CHIPS.
THE " ▲ " STANDS FOR RED ORANGE CHIPS.

Part No.	Color(λ d)	Description	Typ.Iv/Dot @ IP=32mA 1/16 Duty
LTP-7057KM	AlInGaP Green (572nm) & AlInGaP Hyper Red (640nm)	Anode Column, Cathode Row	2300 μcd 2300 μcd
LTP-7157KM	AlInGaP Green (572nm) & AlInGaP Hyper Red (640nm)	Anode Row, Cathode Column	2300 μcd 2300 μcd

5 X 7 Multicolor Dot Matrix LED Displays

31.79mm (3 ϕ)
Dual-In-Line
1.25"H x .9"W x .31"D

31.79mm (3 ϕ)
Dual-In-Line
1.25"H x .9"W x .31"D

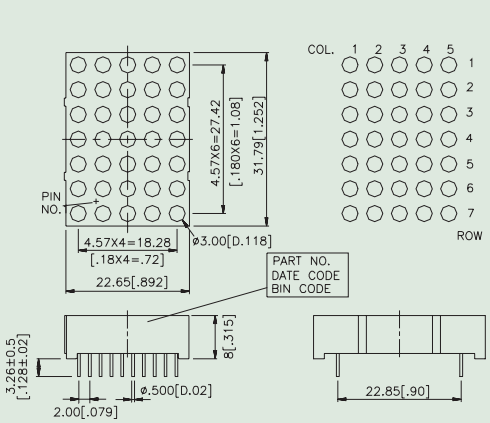

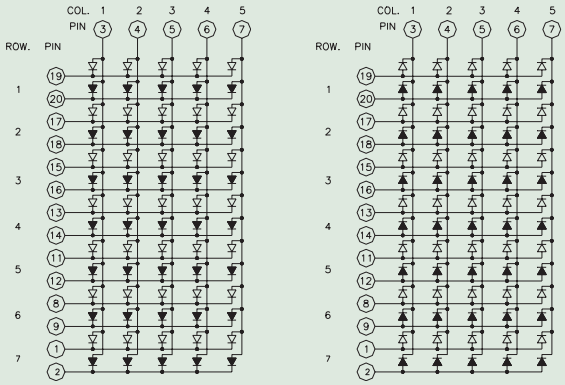

THE SIGN " " STANDS FOR GREEN COLOR CHIPS.
THE SIGN " " STANDS FOR ORANGE COLOR CHIPS.

Part No.	Color(λ d)	Description	Typ.Iv/Dot @ IP=32mA 1/16 Duty
LTP-1257AKM	AlInGaP Green (572nm) & AlInGaP Hyper Red (640nm)	Anode Column, Cathode Row	4500 µcd 4500 µcd
LTP-1357AKM	AlInGaP Green (572nm) & AlInGaP Hyper Red (640nm)	Anode Row, Cathode Column	4500 µcd 4500 µcd

5 X 7 Multicolor Dot Matrix LED Displays

53mm (5 ϕ)
Dual-In-Line
2.1"H x 1.5"W x .34"D

53mm (5 ϕ)
Dual-In-Line
2.1"H x 1.5"W x .34"D

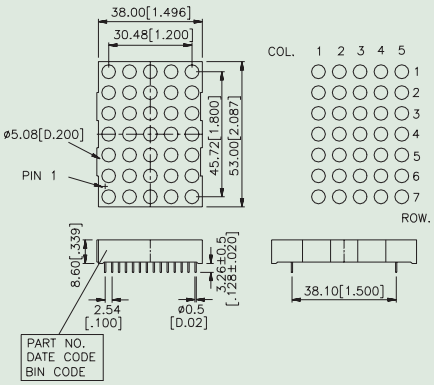

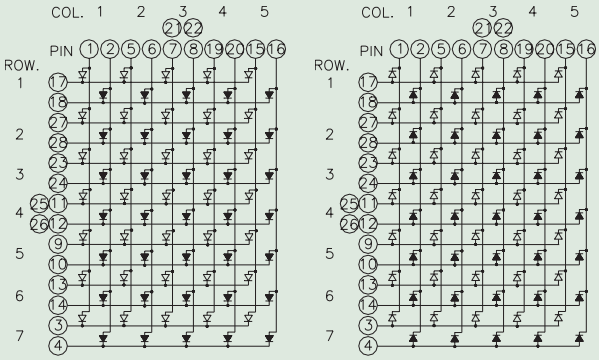

THE SIGN " " STANDS FOR GREEN COLOR CHIPS.
THE SIGN " " STANDS FOR ORANGE COLOR CHIPS.

Part No.	Color(λ d)	Description	Typ.Iv/Dot @ IP=32mA 1/16 Duty
LTP-2657AKM	AlInGaP Green (572nm) & AlInGaP Hyper Red (640nm)	Anode Column, Cathode Row	4910 μcd 4910 μcd
LTP-2757AKM	AlInGaP Green (572nm) & AlInGaP Hyper Red (640nm)	Anode Row, Cathode Column	4910 μcd 4910 μcd

5 X 8 Single Color Dot Matrix LED Displays

37.4mm (3 ϕ)
Dual-In-Line
1.47"H x .9"W x .31"D

37.4mm (3 ϕ)
Dual-In-Line
1.47"H x .9"W x .31"D

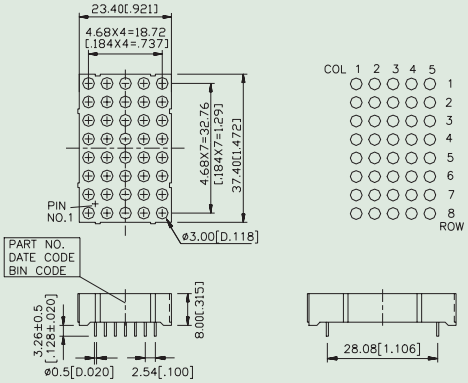

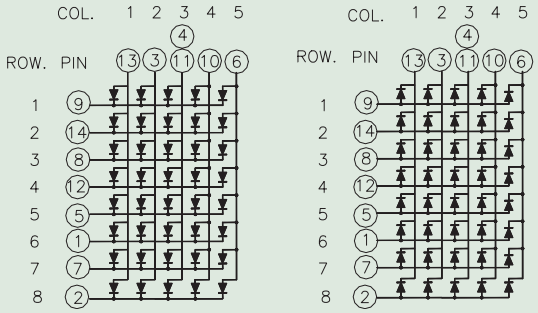

Part No.	Color(λ d)	Description	Typ.Iv/Dot @ IP=32mA 1/16 Duty
LTP-14058AKD	AlInGaP Hyper Red (639nm)	Anode Column, Cathode Row	4500 µcd
LTP-14058AKG	AlInGaP Green (572nm)	Anode Column, Cathode Row	4500 µcd
LTP-14058AKF	AlInGaP Yellows Orange (605nm)	Anode Column, Cathode Row	4500 µcd
LTP-14058AKS	AlInGaP Yellows (587nm)	Anode Column, Cathode Row	4500 µcd
LTP-14058AKR	AlInGaP Super Red (631nm)	Anode Column, Cathode Row	4500 µcd
LTP-14158AKD	AlInGaP Hyper Red (639nm)	Cathode Column, Anode Row	4500 µcd
LTP-14158AKG	AlInGaP Green (572nm)	Cathode Column, Anode Row	4500 µcd
LTP-14158AKF	AlInGaP Yellows Orange (605nm)	Cathode Column, Anode Row	4500 µcd
LTP-14158AKS	AlInGaP Yellows (587nm)	Cathode Column, Anode Row	4500 µcd
LTP-14158AKR	AlInGaP Super Red (631nm)	Cathode Column, Anode Row	4500 µcd

5 X 8 Single Color Dot Matrix LED Displays

60.8mm (5 ϕ)
Dual-In-Line
2.4"H x 1.5"W x .35"D

60.8mm (5 ϕ)
Dual-In-Line
2.4"H x 1.5"W x .35"D

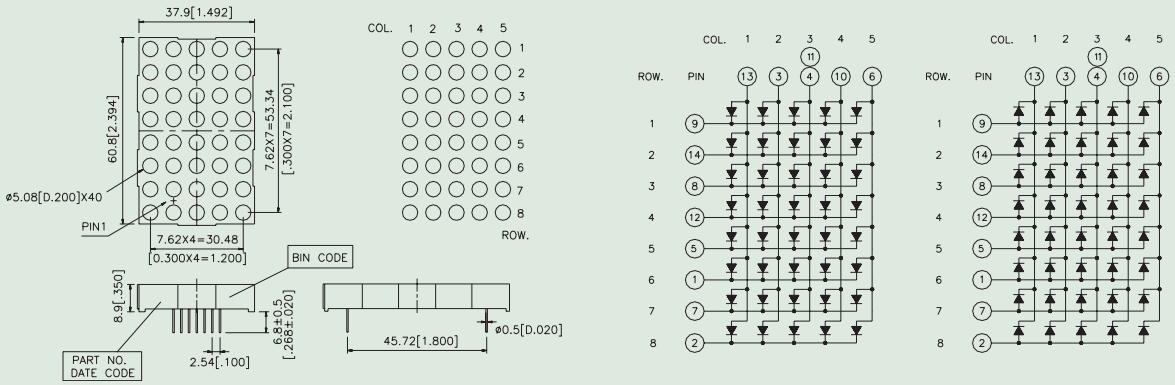

Part No.	Color(λ d)	Description	Typ.Iv/Dot @ IP=32mA 1/16 Duty
LTP-2058AKD	AlInGaP Hyper Red (639nm)	Anode Column, Cathode Row	4910 μcd
LTP-2058AKG	AlInGaP Green (572nm)	Anode Column, Cathode Row	4910 μcd
LTP-2058AKF	AlInGaP Yellows Orange (605nm)	Anode Column, Cathode Row	4910 μcd
LTP-2058AKS	AlInGaP Yellows (587nm)	Anode Column, Cathode Row	4910 μcd
LTP-2058AKR	AlInGaP Super Red (631nm)	Anode Column, Cathode Row	4910 μcd
LTP-2158AKD	AlInGaP Hyper Red (639nm)	Cathode Column, Anode Row	4910 μcd
LTP-2158AKG	AlInGaP Green (572nm)	Cathode Column, Anode Row	4910 μcd
LTP-2158AKF	AlInGaP Yellows Orange (605nm)	Cathode Column, Anode Row	4910 μcd
LTP-2158AKS	AlInGaP Yellows (587nm)	Cathode Column, Anode Row	4910 μcd
LTP-2158AKR	AlInGaP Super Red (631nm)	Cathode Column, Anode Row	4910 μcd

5 X 8 Multicolor Dot Matrix LED Displays

37.4mm (3 ϕ)
Dual-In-Line
1.48"H x .9"W x .32"D

37.4mm (3 ϕ)
Dual-In-Line
1.48"H x .9"W x .32"D

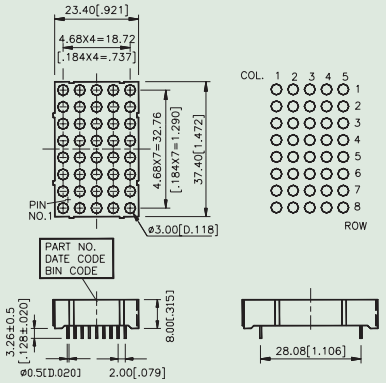

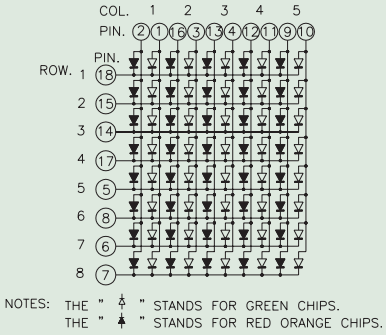

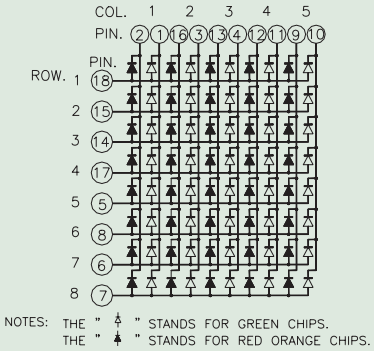

Part No.	Color(λ d)	Description	Typ.Iv/Dot @ IP=32mA 1/16 Duty
LTP-14858KM	AlInGaP Green (572nm) & AlInGaP Hyper Red (640nm)	Anode Column, Cathode Row	4500 µcd 4500 µcd
LTP-14958KM	AlInGaP Green (572nm) & AlInGaP Hyper Red (640nm)	Cathode Column, Anode Row	4500 µcd 4500 µcd

5 X 8 Multicolor Dot Matrix LED Displays

60.8mm (5 ϕ)
Dual-In-Line
2.4"H x 1.5"W x .35"D

60.8mm (5 ϕ)
Dual-In-Line
2.4"H x 1.5"W x .35"D

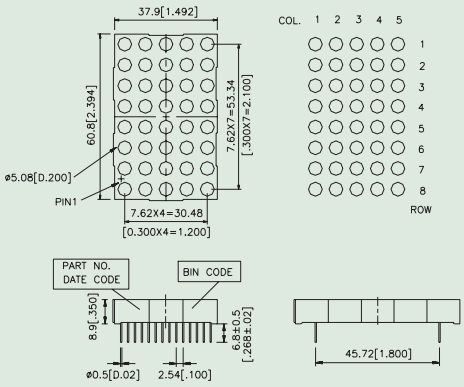

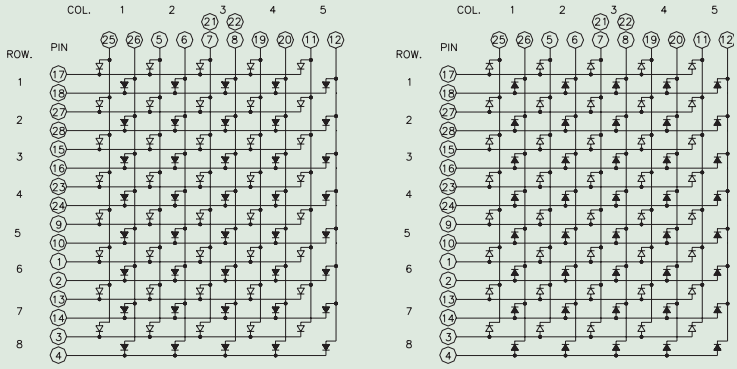

THE SIGN " " STANDS FOR GREEN COLOR CHIPS.
THE SIGN " " STANDS FOR ORANGE COLOR CHIPS.

Part No.	Color(λ d)	Description	Typ.Iv/Dot @ IP=32mA 1/16 Duty
LTP-2458AKM	AlInGaP Green (572nm) & AlInGaP Hyper Red (640nm)	Anode Column, Cathode Row	4910 μcd 4910 μcd
LTP-2558AKM	AlInGaP Green (572nm) & AlInGaP Hyper Red (640nm)	Cathode Column, Anode Row	4910 μcd 4910 μcd

8 X 8 Single Color Dot Matrix LED Displays

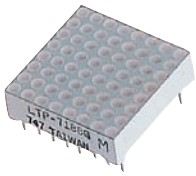

20mm (1.9 ϕ)
Dual-In-Line
.8"H x .8"W x .24"D

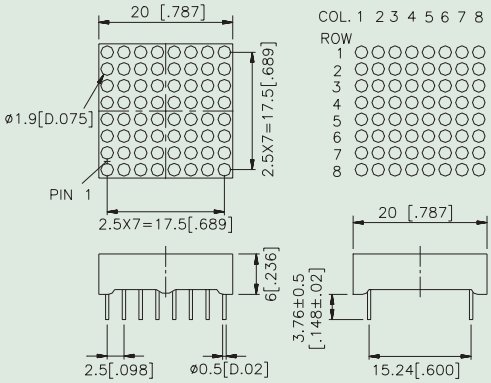

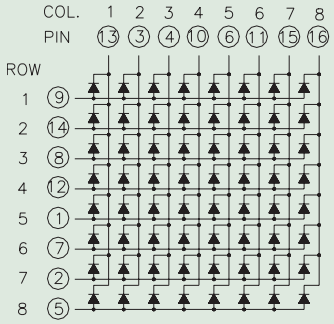

Part No.	Color(λ d)	Description	Typ.Iv/Dot @ IP=32mA 1/16 Duty
LTP-7188KD	AlInGaP Hyper Red (639nm)	Anode Row, Cathode Column	2300 µcd
LTP-7188KG	AlInGaP Green (572nm)	Anode Row, Cathode Column	2300 µcd
LTP-7188KF	AlInGaP Yellows Orange (605nm)	Anode Row, Cathode Column	2300 µcd
LTP-7188KS	AlInGaP Yellows (587nm)	Anode Row, Cathode Column	2300 µcd
LTP-7188KR	AlInGaP Super Red (631nm)	Anode Row, Cathode Column	2300 µcd

8 X 8 Single Color Dot Matrix LED Displays

48mm (5 ϕ)
Dual-In-Line
1.9"H x 1.9"W x .35"D

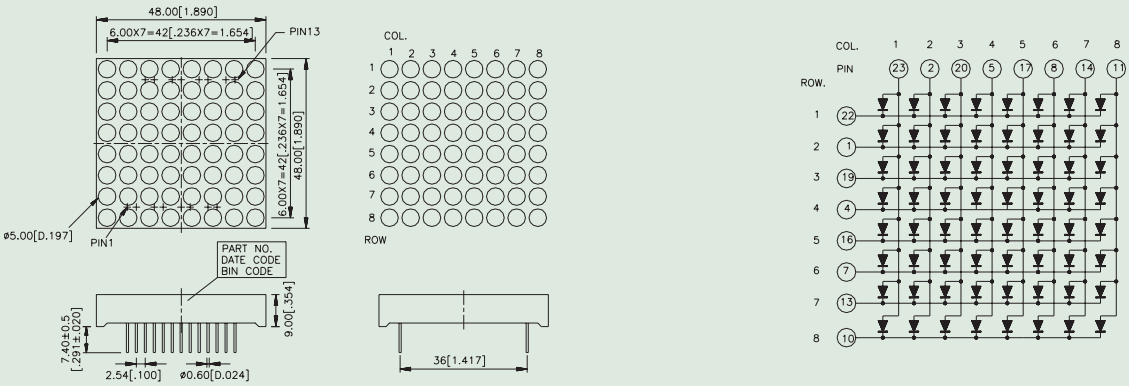

Part No.	Color(λ d)	Description	Typ.Iv/Dot @ IP=32mA 1/16 Duty
LTP-18088KD	AlInGaP Hyper Red (639nm)	Anode Column, Cathode Row	4910 μcd
LTP-18088KG	AlInGaP Green (572nm)	Anode Column, Cathode Row	4910 μcd
LTP-18088KF	AlInGaP Yellows Orange (605nm)	Anode Column, Cathode Row	4910 μcd
LTP-18088KS	AlInGaP Yellows (587nm)	Anode Column, Cathode Row	4910 μcd
LTP-18088KR	AlInGaP Super Red (631nm)	Anode Column, Cathode Row	4910 μcd

8 X 8 Single Color Dot Matrix LED Displays

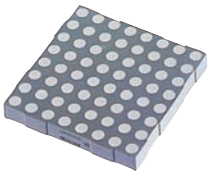

60.2mm (5 ϕ)
Dual-In-Line
2.4"H x 2.4"W x .36"D

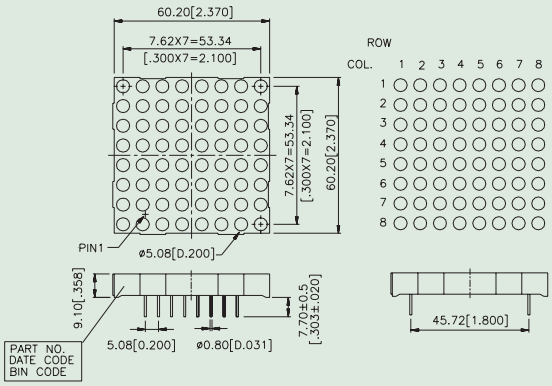

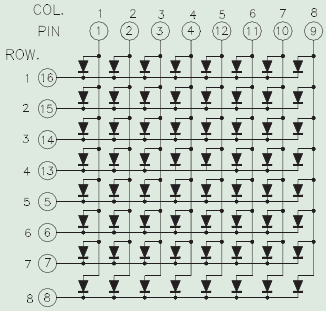

Part No.	Color(λ d)	Description	Typ.Iv/Dot @ IP=32mA 1/16 Duty
LTP-2088KD	AlInGaP Hyper Red (639nm)	Anode Column, Cathode Row	4910 μcd
LTP-2088KG	AlInGaP Green (572nm)	Anode Column, Cathode Row	4910 μcd
LTP-2088KF	AlInGaP Yellows Orange (605nm)	Anode Column, Cathode Row	4910 μcd
LTP-2088KS	AlInGaP Yellows (587nm)	Anode Column, Cathode Row	4910 μcd
LTP-2088KR	AlInGaP Super Red (631nm)	Anode Column, Cathode Row	4910 μcd

8 X 8 Multicolor Dot Matrix LED Displays

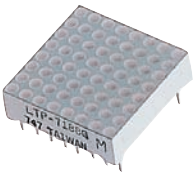

20.2mm (1.9 ϕ)
Dual-In-Line
.8"H x .8"W x .24"D

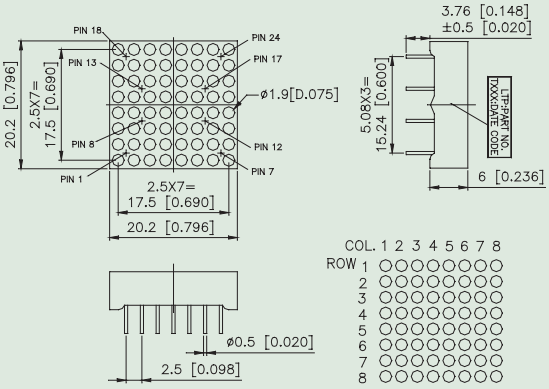

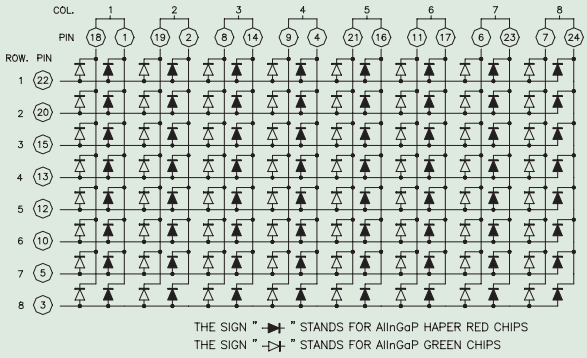

Part No.	Color(λ d)	Description	Typ.Iv/Dot @ IP=32mA 1/16 Duty
LTP-7388M-01	AlInGaP Green (572nm) & AlInGaP Hyper Red (639nm)	Anode Column, Cathode Row	4200 μcd 4200 μcd

8 X 8 Multicolor Dot Matrix LED Displays

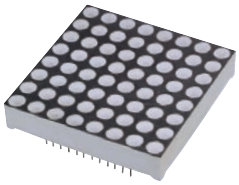

31.9mm (3 ϕ)
Dual-In-Line
1.257"H x 1.257"W x .315"D

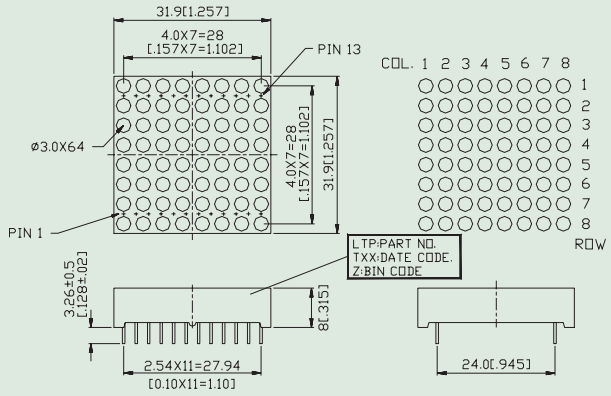

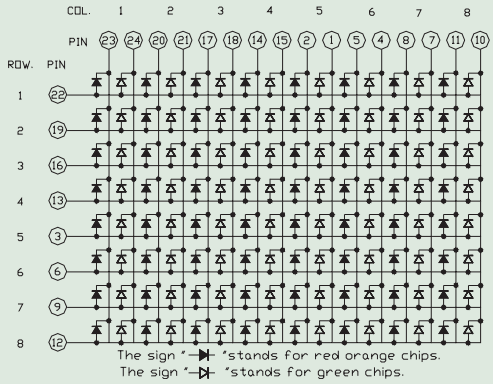

Part No.	Color(λ d)	Description	Typ.Iv/Dot @ IP=32mA 1/16 Duty
LTP-12188M-07	AlInGaP Green (572nm) & AlInGaP Hyper Red (640nm)	Anode Column, Cathode Row	4500 μcd 4500 μcd

8 X 8 Multicolor Dot Matrix LED Displays

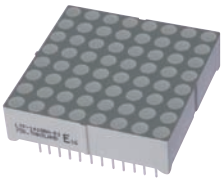

38.0mm (3.7 ϕ)
Dual-In-Line
1.496"H x 1.496"W x .407"D

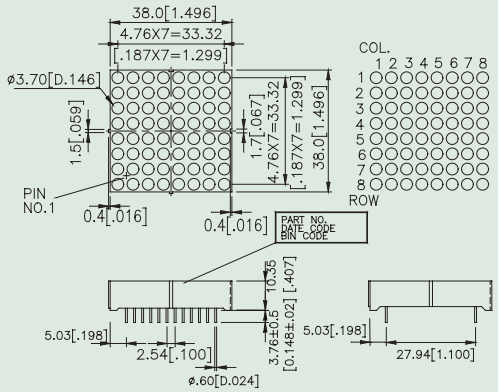

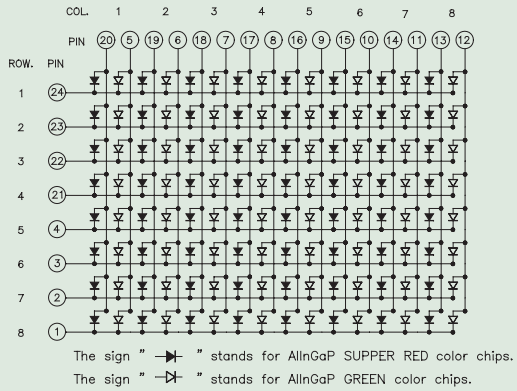

Part No.	Color(λ d)	Description	Typ.Iv/Dot @ IP=32mA 1/16 Duty
LTP-14088KM-05	AlInGaP Green (572nm) & AlInGaP Super Red (631nm)	Anode Column, Cathode Row	4700 µcd 4700 µcd

8 X 8 Multicolor Dot Matrix LED Displays

48mm (5 ϕ)
Dual-In-Line
1.9"H x 1.9"W x .35"D

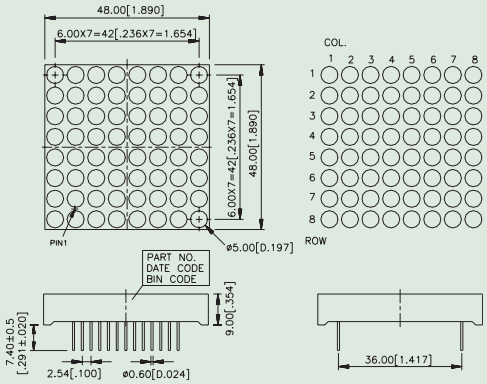

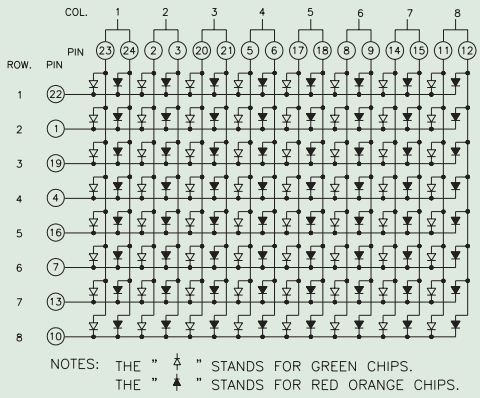

Part No.	Color(λ d)	Description	Typ.Iv/Dot @ IP=32mA 1/16 Duty
LTP-18188M-01	AlInGaP Green (572nm) & AlInGaP Hyper Red (640nm)	Anode Column, Cathode Row	4910 µcd 4910 µcd

8 X 8 Multicolor Dot Matrix LED Displays

60.2mm (5 ϕ)
Dual-In-Line
2.4"H x 2.4"W x .36"D

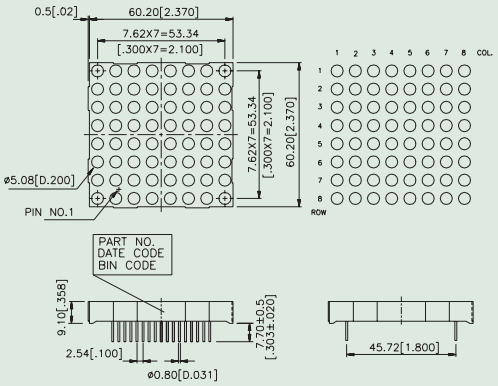

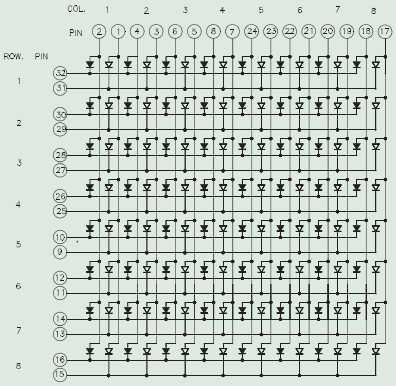

Part No.	Color(λ d)	Description	Typ.Iv/Dot @ IP=32mA 1/16 Duty
LTP-2188AKM	AlInGaP Green (572nm)	Anode Column, Cathode Row	4910 μcd
	&		
	AlInGaP Hyper Red (640nm)		4910 μcd

16 X 16 Multicolor Dot Matrix LED Displays

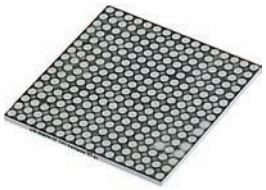

64mm (3 ϕ)
Dual-In-Line
2.5"H x 2.5"W x .067"D

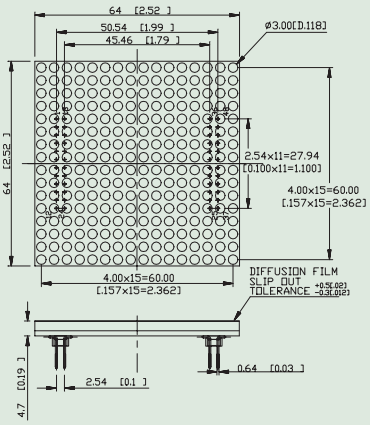

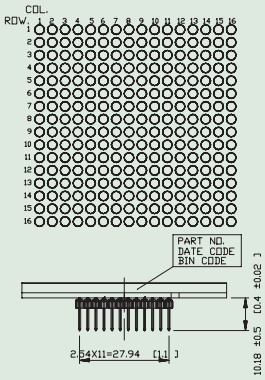

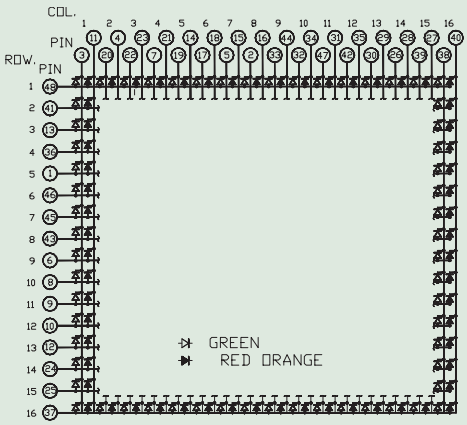

Part No.	Color(λ d)	Description	Typ.Iv/Dot @ IP=32mA 1/16 Duty
LTP-257FFKM-01	AlInGaP Green (572nm) & AlInGaP Hyper Red (640nm)	Anode Row, Cathode Column	4500 µcd 4500 µcd

Graphic(DVD) LED Displays

Epoxy Type
7mm (0.28")
Single-In-Line
.63"H x 3.23"W x .37"D

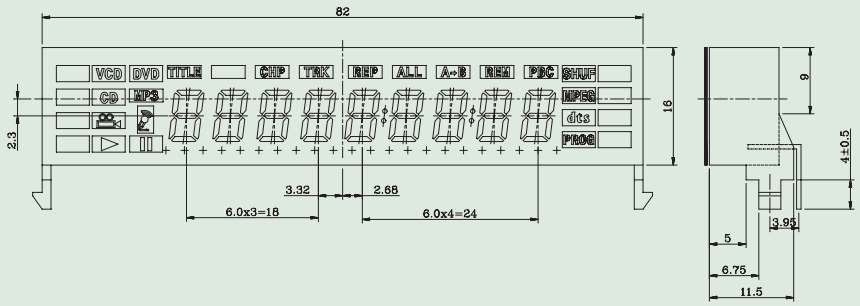

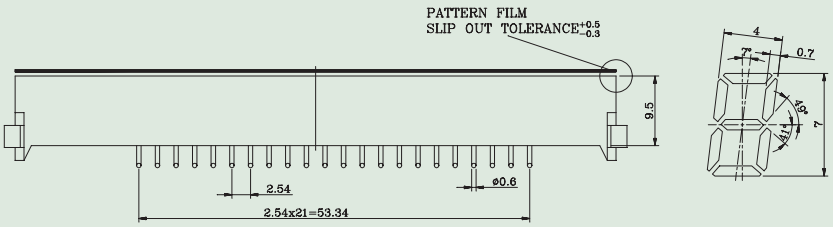

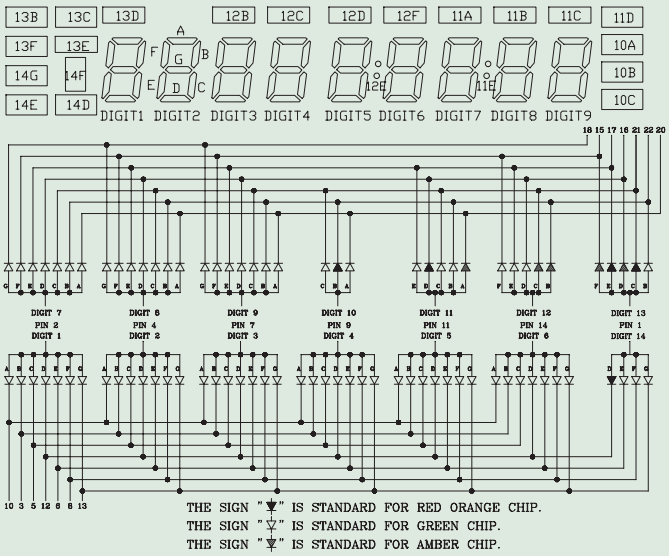

Part No.	Color(λ d)	Description	Typ.Iv/Seg @ IF=10mA
LTG-Y2K31M	Red Orange (621nm)	Multiplex Common Anode	1060 μcd
	Green (569nm)		930 μcd
	Amber (602nm)		650 μcd

Graphic(DVD) LED Displays

Epoxy Type
6mm (0.23")
Single-In-Line
.61"H x 2.03"W x .31"D

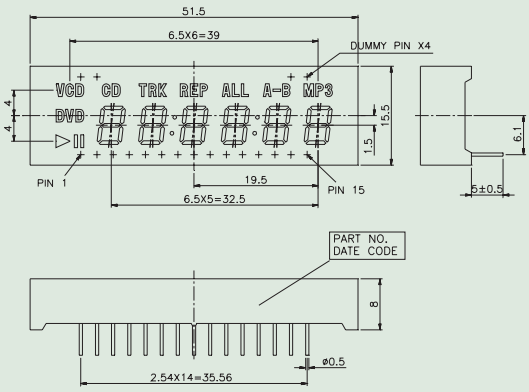

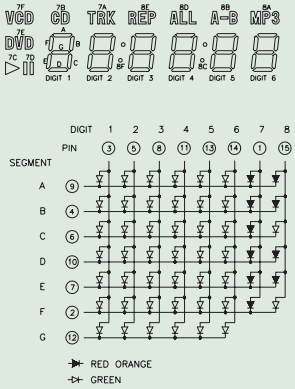

Part No.	Color(λ d)	Description	Typ.Iv/Seg @ IF=10mA
LTG-0122M	Red Orange (621nm)	Multiplex Common Anode	1600 μcd
	Green (565nm)		1600 μcd

Graphic(DVD) LED Displays

6mm (.24")
Single-In-Line
.53"H x 2.76"W x .43"D

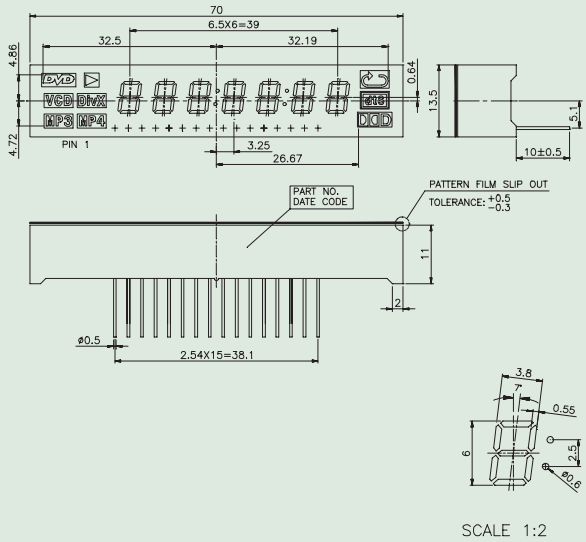

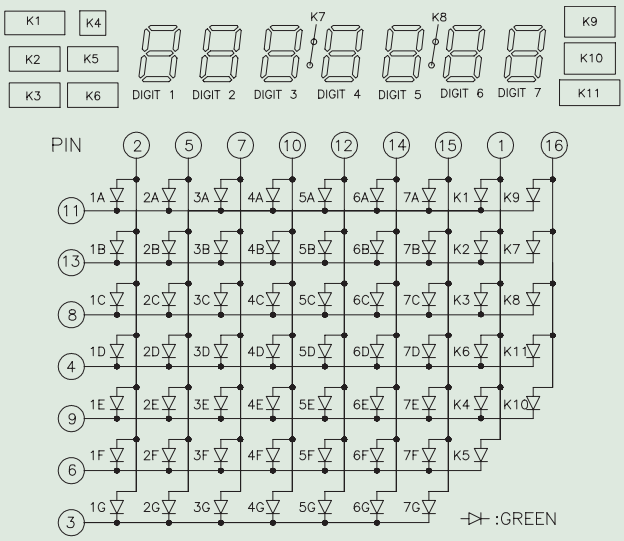

Part No.	Color(λ d)	Description	Typ.Iv/Dot @ IP=80mA 1/16 Duty
LTG-0422G-S2	Green (569nm)	Multiplex C.A.	650 μcd

Driver IC Built-in LED Displays

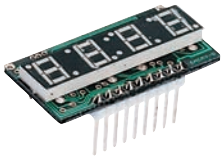

Air Type
7.62mm (.3")
Single-In-Line
.8"H x 1.6"W x .23"D

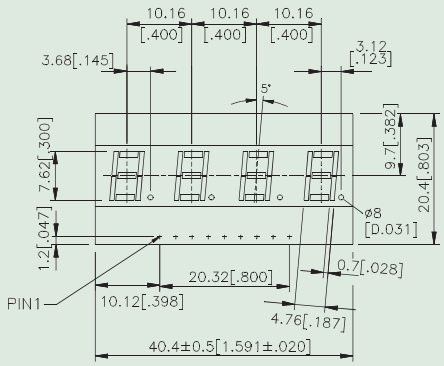

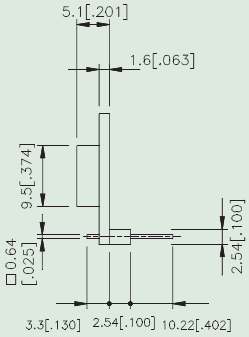

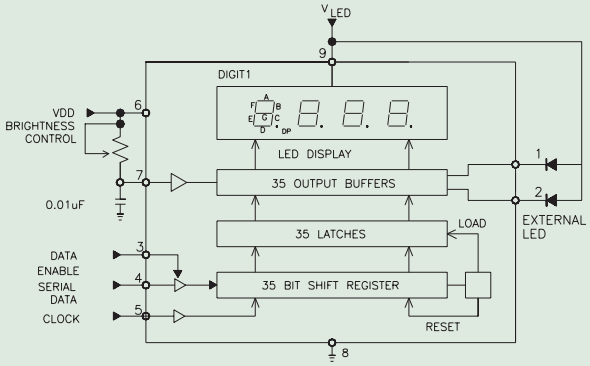

Part No.	Color(λ d)	Description	Typ.Iv/Dot @ IP=80mA 1/16 Duty
LTM-8328PKR-04	Bright Red (657nm)	Four Digit, Rt. Hand Decimal With 2 Extra Output Bits	155 μcd
LTM-8328GKR-04	Green (569nm)	Four Digit, Rt. Hand Decimal With 2 Extra Output Bits	220 μcd

Driver IC Built-in LED Displays

Epoxy Type
13.8mm (.54")
Dual-In-Line
.74"H x 1.0"W x .3"D

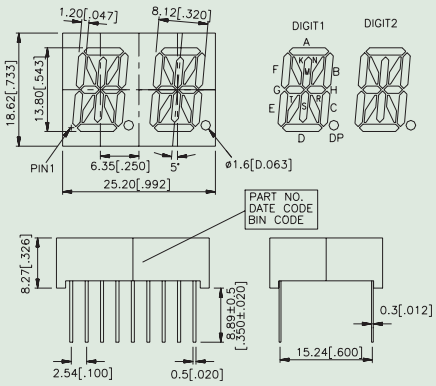

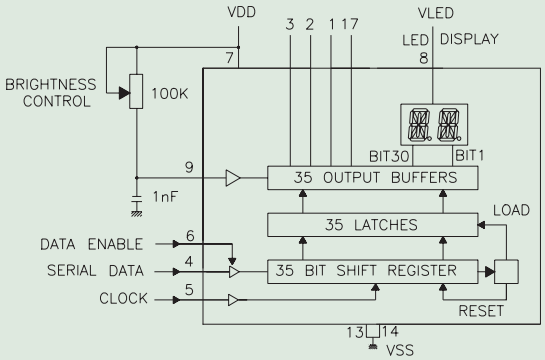

Part No.	Color(λ d)	Description	Typ.Iv/Dot @ IP=80mA 1/16 Duty
LTM-8647AKD	AlInGaP Hyper Red (639nm)	Dual Character, With 4 Extra Output Bits	4.9 mcd
LTM-8647AJG	AlInGaP Green (572nm)	Dual Character, With 4 Extra Output Bits	6.3 mcd
LTM-8647AKF	AlInGaP Yellow Orange (605nm)	Dual Character, With 4 Extra Output Bits	11.2 mcd
LTM-8647AKS	AlInGaP Yellow (587nm)	Dual Character, With 4 Extra Output Bits	6.3 mcd
LTM-8647AKR	AlInGaP Super Red (631nm)	Dual Character, With 4 Extra Output Bits	4.9 mcd

Driver IC Built-in LED Displays

Epoxy Type
14.22mm (.56")
Dual-In-Line
.75"H x 1.0"W x .32"D

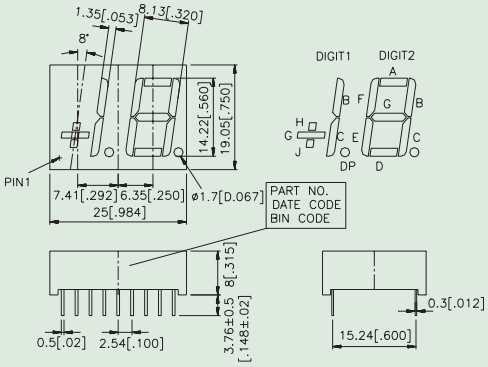

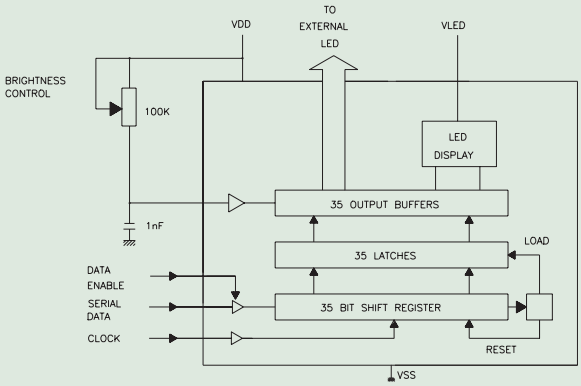

Part No.	Color(λ d)	Description	Typ.Iv/Dot @ IP=80mA 1/16 Duty
LTM-8529KD	AlInGaP Hyper Red (639nm)	1 1/2 Digit, Rt. Hand Decimal With 8 Extra Output Bits	4.9 mcd
LTM-8529JG	AlInGaP Green (572nm)	1 1/2 Digit, Rt. Hand Decimal With 8 Extra Output Bits	6.3 mcd
LTM-8529KF	AlInGaP Yellow Orange (605nm)	1 1/2 Digit, Rt. Hand Decimal With 8 Extra Output Bits	11.2 mcd
LTM-8529KS	AlInGaP Yellow (587nm)	1 1/2 Digit, Rt. Hand Decimal With 8 Extra Output Bits	6.3 mcd
LTM-8529KR	AlInGaP Super Red (631nm)	1 1/2 Digit, Rt. Hand Decimal With 8 Extra Output Bits	4.9 mcd

Driver IC Built-in LED Displays

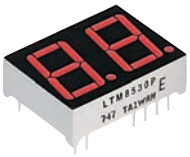

Epoxy Type
14.22mm (.56")
Dual-In-Line
.75"H x 1.0"W x .32"D

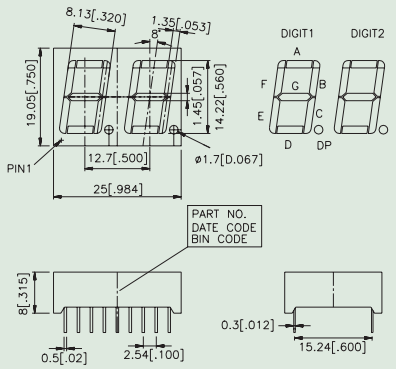

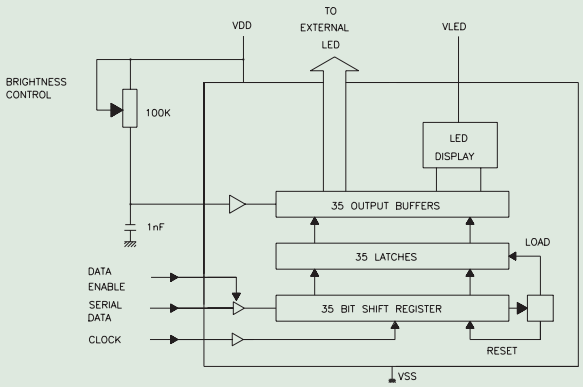

Part No.	Color(λ d)	Description	Typ.Iv/Dot @ IP=80mA 1/16 Duty
LTM-8530KD	AlInGaP Hyper Red (639nm)	Dual Digit, Rt. Hand Decimal With 8 Extra Output Bits	4.9 mcd
LTM-8530JG	AlInGaP Green (572nm)	Dual Digit, Rt. Hand Decimal With 8 Extra Output Bits	6.3 mcd
LTM-8530KF	AlInGaP Yellow Orange (605nm)	Dual Digit, Rt. Hand Decimal With 8 Extra Output Bits	11.2 mcd
LTM-8530KS	AlInGaP Yellow (587nm)	Dual Digit, Rt. Hand Decimal With 8 Extra Output Bits	6.3 mcd
LTM-8530KR	AlInGaP Super Red (631nm)	Dual Digit, Rt. Hand Decimal With 8 Extra Output Bits	4.9 mcd

Driver IC Built-in LED Displays

7mm (.28")
Single-In-Line
.78"H x 3.23"W x .37"D

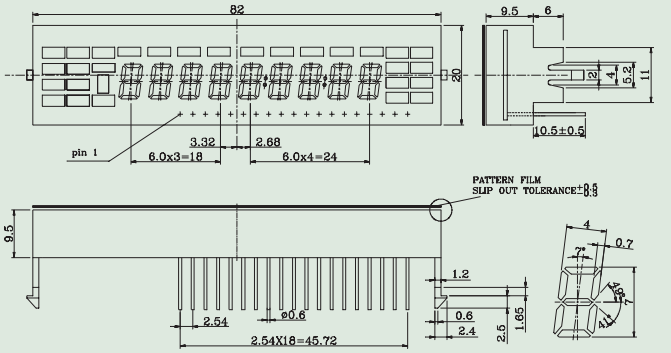

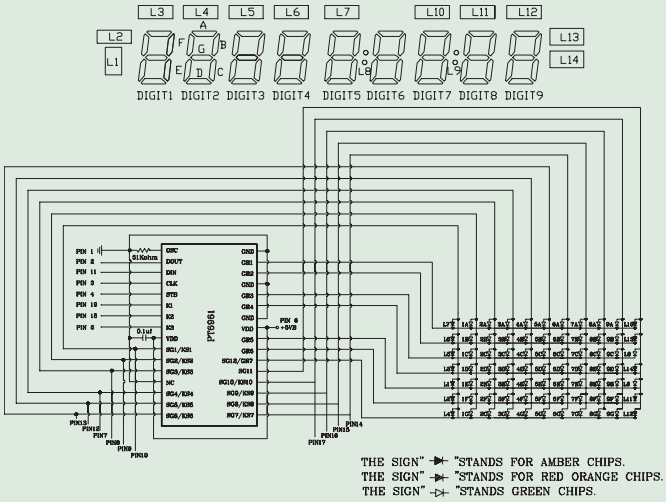

Part No.	Color(λ d)	Description	Typ.Iv/Seg @ IF=10mA
LTM-0305M-01	Red Orange (621nm) Green (565nm)	Multiplex with IC Driver	900 μcd 900 μcd

Driver IC Built-in LED Displays

6mm (.23")
Single-In-Line
.82"H x 2.2"W x .39"D

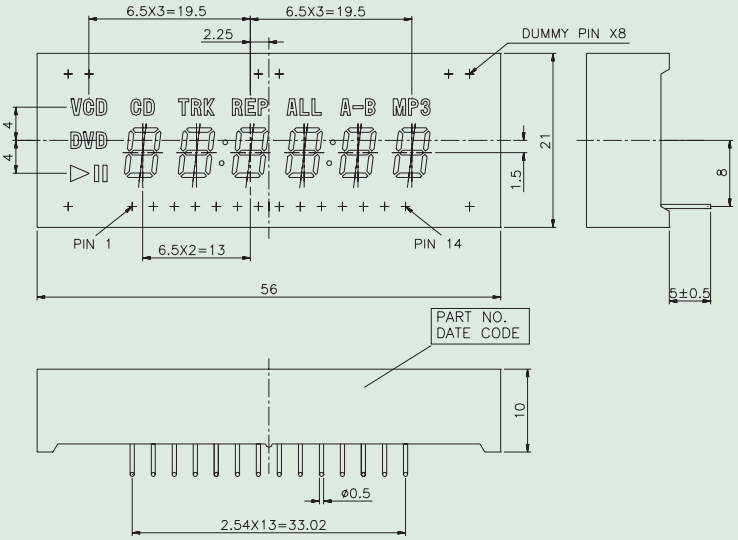

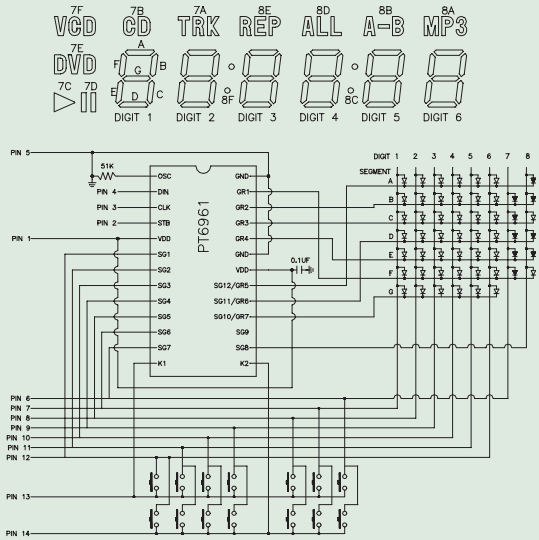

Part No.	Color(λ d)	Description	Typ.Iv/Seg @ IF=10mA
LTM-0304M-01	Red Orange (621nm)	Multiplex with IC Driver	900 μcd
	Green (565nm)		900 μcd

Driver IC Built-in LED Displays

Epoxy Type
14.22mm (.56")
Dual-In-Line
.75"H x 1.5"W x .32"D

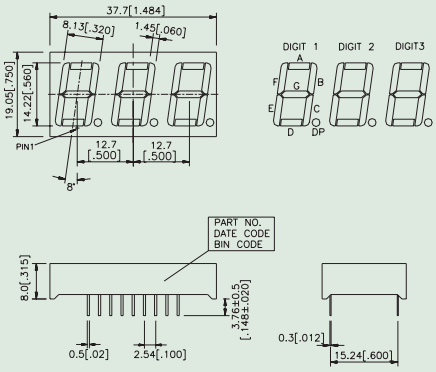

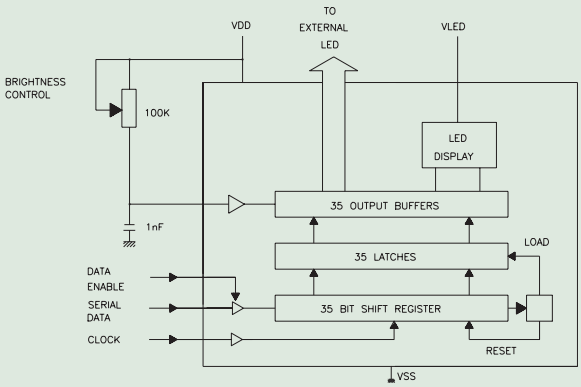

Part No.	Color(λ d)	Description	Typ.Iv/Dot @ IP=80mA 1/16 Duty
LTM-8522KD	AlInGaP Hyper Red (639nm)	Triple Digit, Rt. Hand Decimal With 10 Extra Output Bits	4.9 mcd
LTM-8522JG	AlInGaP Green (572nm)	Triple Digit, Rt. Hand Decimal With 10 Extra Output Bits	6.3 mcd
LTM-8522KF	AlInGaP Yellow Orange (605nm)	Triple Digit, Rt. Hand Decimal With 10 Extra Output Bits	11.2 mcd
LTM-8522KS	AlInGaP Yellow (587nm)	Triple Digit, Rt. Hand Decimal With 10 Extra Output Bits	6.3 mcd
LTM-8522KR	AlInGaP Super Red (631nm)	Triple Digit, Rt. Hand Decimal With 10 Extra Output Bits	4.9 mcd

16 X 32 SMD LED Lamp on Board Dot Matrix Displays

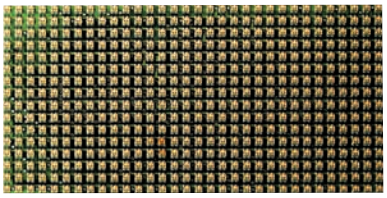

2.5mm
Multi-In-Line
1.57"H x 3.14"W

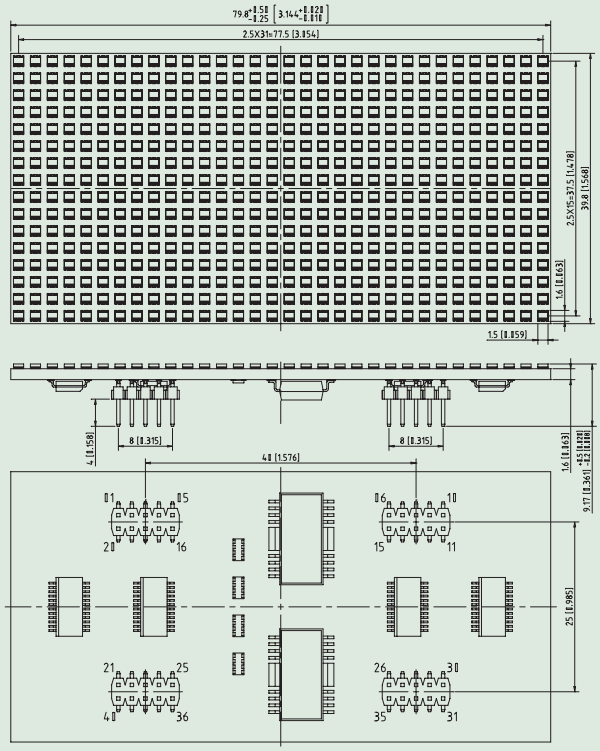

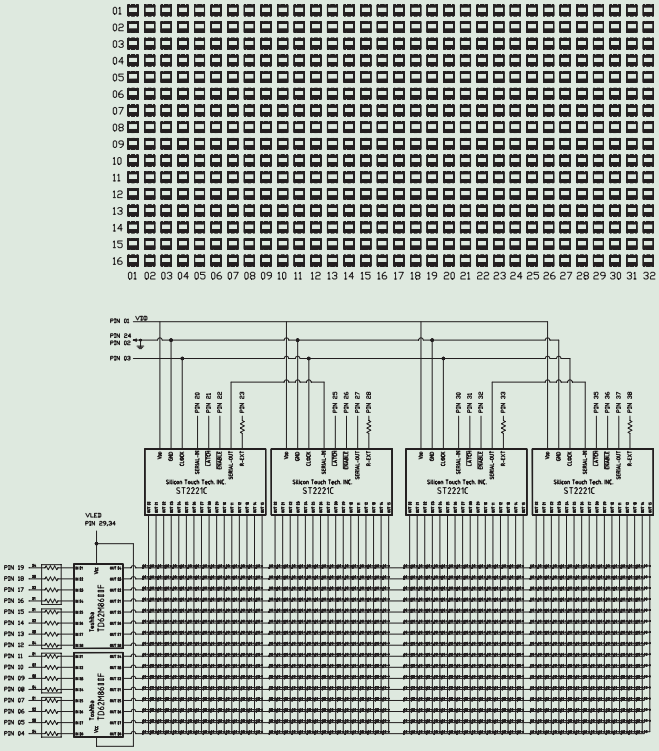

Part No.	Color(λ d)	Description	Typ.Iv/Seg @ IF=10mA
LTM-0124M-01	AlInGaP Red (631nm) AlInGaP Green (571nm)	Multiplex with IC Driver	10 mcd 6.4 mcd

Bar Graph Arrays LED Displays

20 Pin DIP
.100" Centers

.955" Lx
.400" Wx
.315" H

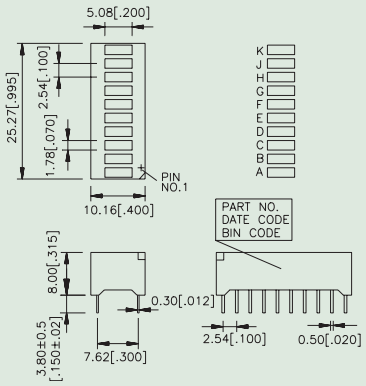

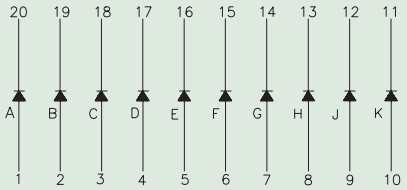

Part No.	Color(λ d)	Lens	Luminous Intensity Iv Typ. @ 10mA	Typical Viewing Angle 2 θ1/2*	VF Typ. @ 20mA
LTA-1000KD	AlInGaP Hyper Red (639nm)	Diffused	12.3 mcd	100°	2.1V
LTA-1000KG	AlInGaP Green (572nm)	Diffused	7.6 mcd	100°	2.1V
LTA-1000KF	AlInGaP Yellow (605nm)	Diffused	16.4 mcd	100°	2.1V
LTA-1000KS	AlInGaP Yellow (587nm)	Diffused	16.4 mcd	100°	2.0V
LTA-1000KR	AlInGaP Super Red (631nm)	Diffused	12.3 mcd	100°	2.0V

SMD LED Displays

10mm
Dual-In-Line
.59"H x .39"W x 1.5"D

10mm
Dual-In-Line
.59"H x .39"W x 1.5"D

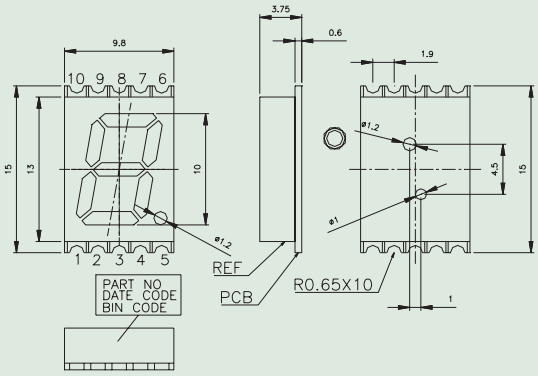

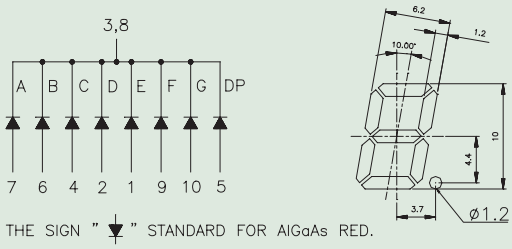

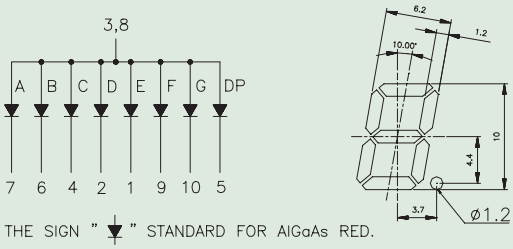

Part No.	Color(λ d)	Description	@ IP=1mA
LTS-4312SKR-P	AlInGaP Super Red (631nm)	Common Cathode	2600 μcd
LTS-4812SKR-P	AlInGaP Super Red (631nm)	Common Anode	2600 μcd

Application Note

Cautions on LED Displays

1. Cleaning

If cleaning of the display is necessary, gently wipe the surface and the pins out with alcohol or IPA. Use of harsh chemicals might cause corrosion of the pins or result in haze on the surface of the display.

2. Soldering

Solder temperature: Max. 260°C for Max. 3 sec.at 1.6mm below seating plane

3. Drive Mode

The displays can be driven in either the constant voltage mode or the constant current mode. Refer to the specifications on maximum allowable drive current in the continuous current mode or the pulse current mode. It is recommended that a current limiting resistor is incorporated in series with each LED.

4. Reliability Test

Classification	Test Item	Description and Test Condition	Reference standard
Endurance Test	Operation Life	Evaluates resistance of the device when operated at electrical stress Ta=under room temperature If=12mA～25mA per segment or Ip=80mA/duty =1/8, PW=1.25ms Ip=160mA/duty =1/16,PW=1ms(dot) Test Time = 1000hrs (-24hrs,+72hrs)	MIL-STD-750:1026 MIL-STD-883:1005 JIS C 7021 : B-1
	High Temperature High Humidity Storage	Evaluates moisture resistance of the device when stored for a long term at high temperature and humidity Ta=85 ± 5℃ Rh=90～95% Rh Test Time = 240hrs ± 2hrs	MIL-STD-202 : 103B JIS C 7021 : B-11
	High Temperature High Humidity Reverse Bias	Evaluates resistance of leakage current against long term thermal, humidity , and electrical stresses Ta=85 ± 5℃ Rh=90～95% Rh Vr = 5V Test time = 500hrs (-24hrs, +48hrs)	
	High Temperature Storage	Evaluates device durability for long term storage in high temperature Ta=105 ± 5℃ Test Time = 1000hrs(-24hrs, +72hrs)	MIL-STD-883 : 1008 JIS C 7021 : B-10
	Low Temperature Storage	Evaluates device durability for long term storage in low temperature Ta=-35 ± 5℃ Test Time = 1000hrs(-24hrs, +72hrs)	JIS C 7021 : B-12

Application Note

Environmental Test	Temperature Cycling	Evaluates resistance of device at thermal stresses or expansion and contraction 105℃ ~ 25℃ ~ -35℃ ~ 25℃ 30min 5min 30min 5min 10 Cycles(Cob : Thot = 65℃ Tcold = -25℃)	MIL-STD-202 : 107D MIL-STD-750 : 1051 MIL-STD-883 : 1010 JIS C 7021 : A-4
	Thermal Shock	Evaluates device's structure and mechanical resistance when suddenly exposed at severe changes 105 ± 5℃ ~ -35 ± 5℃ 30min 30min 10 Cycles (Cob:Thot = 65℃ Tcold = -25℃)	MIL-STD-202 : 107D MIL-STD-750 : 1051 MIL-STD-883 : 1011
	Solder Resistance	Evaluates resistance to thermal stress caused by soldering T.Sol = 260 ± 5℃ Dwell Time = 10 ± 1 sec	MIL-STD-202 : 210A MIL-STD-750 : 2031 JIS C 7021 : A-1
	Solderability	Evaluates solderability on leads of device T.Sol = 230 ± 5℃ Dwell Time = 5 ± 1sec	MIL-STD-202 : 208D MIL-STD-750 : 2026 MIL-STD-883 : 2003 JIS C 7021 : A-2

Light Module

LED BLM from Lite-On offers LED total solution in backlight application. Our products are focus on high performance type (high brightness, uniformity, and contrast) and can customize for all special requirements.

LCD backlight modules are applicable for long life time and high brightness products (ex. industrial PC, TV, and sunlight readable display…etc.). A backlight is the form of illumination used in a LCD and illuminates the LCD from the side or back.

Light-modules provide for all electronics devices with illuminated brand logo, ambient lighting, and decoration.

LGP is a main optical component of BLM. A LGP made of light-transmittable acrylic resin, and the light source locates on the side of a LGP. A LGP provides the solution transmitting the dot or line light source through designed optical pattern to surface light source.

LGF is the film structure of LGP. A LGF is popular in small device to provide the solution transmitting the dot or line light source through designed optical pattern to surface light source.

LCD Backlight Module

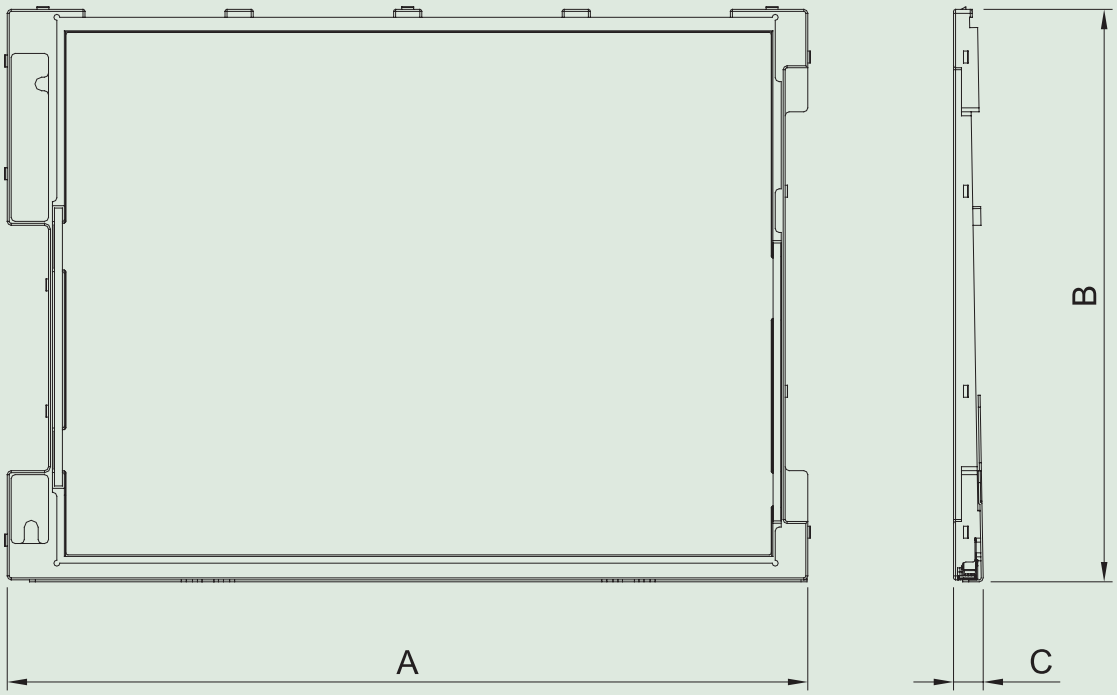

Module Size	A	B	C
8.4"	197.4	144.1	6.9
10.4"	237.7	173.9	7.1
12.1"	277.1	180.3	7.09
13.3"	284	215.6	7.95

Part No.	Description		Typical Optical Spec.			Operation Temperature (°C)	Operation Humidity (%)	Storage Temperature (°C)	Storage Humidity (%)
	LED Type		Brightness (nits)	Uniformity (%)	Chromatics				
LTB-N0840X	Top View	White	15000	85	x:0.28~0.34 y:0.29~0.35	0~55	8~95(40°C Max)	-20~60	5~90(50°C Max)
LTB-N1040X	Top View	White	17000	80	x:0.29~0.33 y:0.30~0.34	0~55	8~95(40°C Max)	-20~60	5~90(50°C Max)
LTB-N1210X	Top View	White	15000	80	x:0.26~0.30 y:0.26~0.30	-20~55	15~90(40°C Max)	-40~65	10~90(50°C Max)
LTB-N1330X	Top View	White	12000	80	x:0.29~0.33 y:0.30~0.34	0~55	8~95(40°C Max)	-20~60	5~90(50°C Max)

Light Module

99.75 x 75.35 x 1.49(mm)

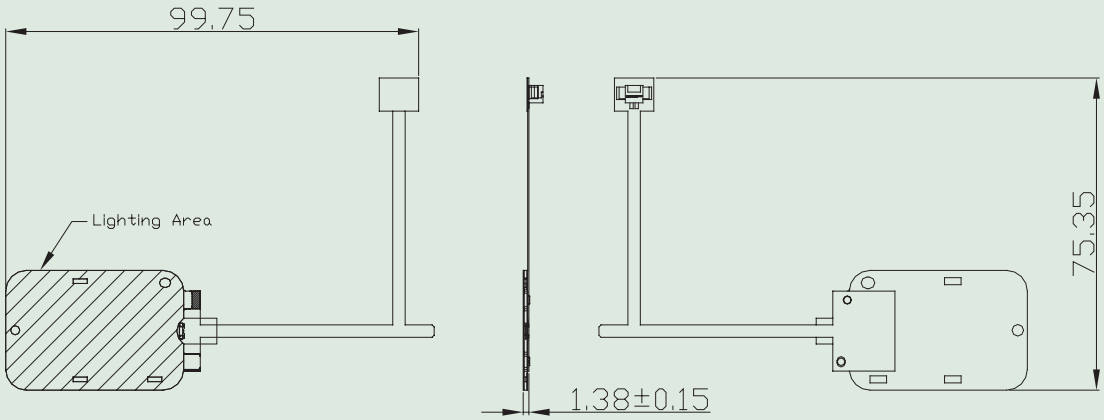

All products for customize.

Part No.	Description		Typical Optical Spec.			Operation Temperature (°C)	Operation Humidity (%)	Storage Temperature (°C)	Storage Humidity (%)
	LED Type		Brightness (nits)	Uniformity (%)	Chromatics				
LTB-A0180X	Side View	White	500	85	x:0.279~0.32 y:0.263~0.32	0~55	8~90(40°C Max)	-25~70	5~90(50°C Max)
	Side View	RGB	R:100 G:200 B:100	85	R:619~629nm G:520~530nm B:455~465nm	0~55	8~90(40°C Max)	-25~70	5~90(50°C Max)
	Side View	Amber	300	85	620~630nm	0~55	8~90(40°C Max)	-25~70	5~90(50°C Max)
	Side View	Red	150	85	631nm	0~55	8~90(40°C Max)	-25~70	5~90(50°C Max)
	Side View	Green	250	85	525nm	0~55	8~90(40°C Max)	-25~70	5~90(50°C Max)
	Side View	Blue	150	85	470nm	0~55	8~90(40°C Max)	-25~70	5~90(50°C Max)
	Side View	Yellow	200	85	587nm	0~55	8~90(40°C Max)	-25~70	5~90(50°C Max)

LGP

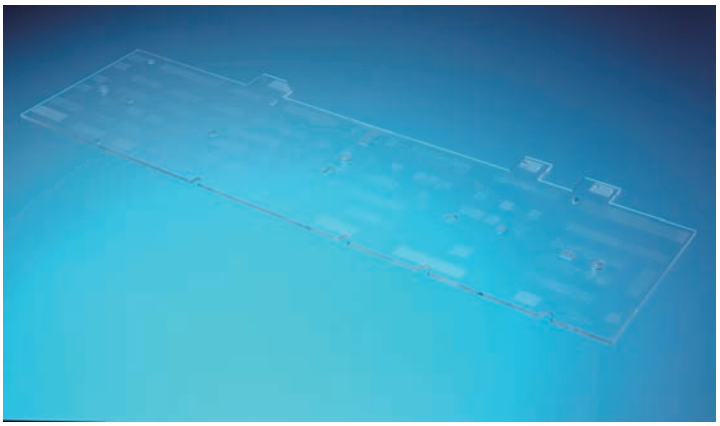

450.74 x 122.04 x 2(mm)

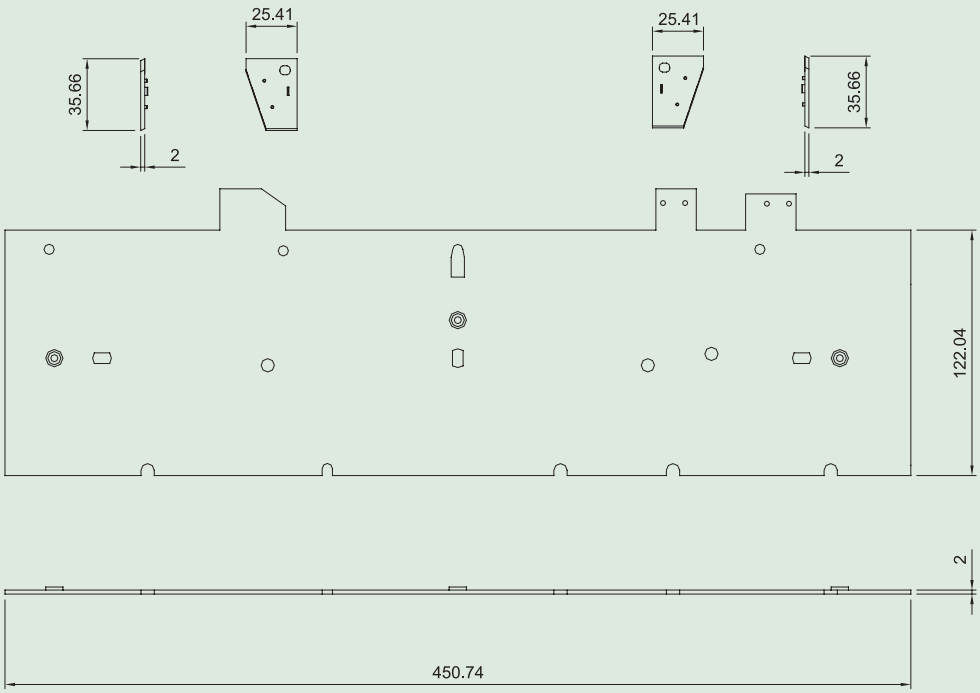

Part No.	Description		Typical Optical Spec.			Operation Temperature (°C)	Operation Humidity (%)	Storage Temperature (°C)	Storage Humidity (%)
	LED Type		Brightness (nits)	Uniformity (%)	Chromatics				
LTB-L46001	-	-	-	-	-	-20~70	8~95(40°C Max)	-40~80	5~90(50°C Max)
LTB-L46002	-	-	-	-	-	-20~70	8~95(40°C Max)	-40~80	5~90(50°C Max)
LTB-L46003	-	-	-	-	-	-20~70	8~95(40°C Max)	-40~80	5~90(50°C Max)

LGF

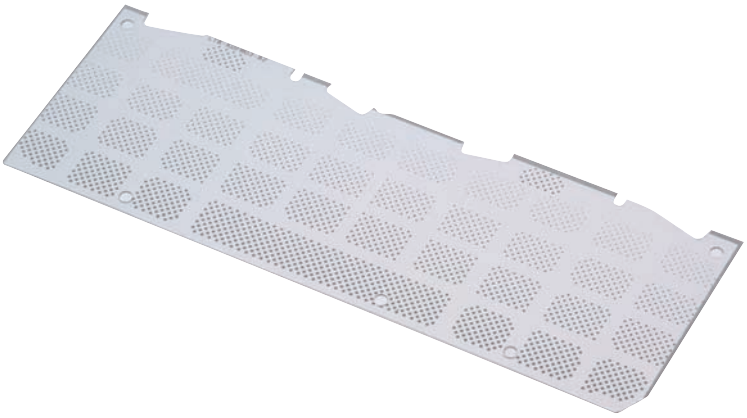

32.54 x 53.9 x 0.13(mm)

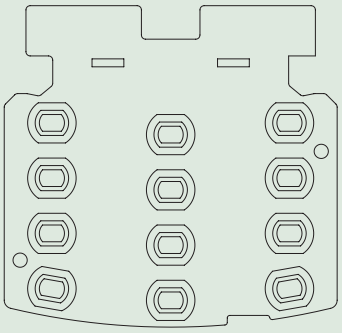

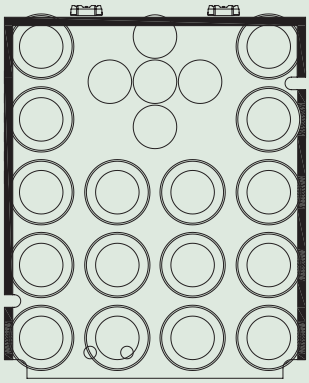

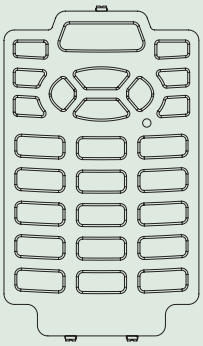

All products for customize

Part No.	Description		Typical Optical Spec.			Operation Temperature (°C)	Operation Humidity (%)	Storage Temperature (°C)	Storage Humidity (%)
	LED Type		Brightness (nits)	Uniformity (%)	Chromatics				
LTB-K0F0X	-	-	-	-	-	-20~70	8~95(40°C Max)	-40~80	5~90(50°C Max)

Application Note

CAUTIONS for LED Light Module

1. Application

The LED light modules are intended to used for ordinary electronic equipment (such as all applications which uses LED as light-source).

Consult Lite-On's Sales in advance for more information on application in which exceptional reliability is required.

2. Operation and Storage

The operation and storage ambient for the modules should not exceed the temperature or humidity as below table. It is recommended that modules out of their original package should be assembled within one day.

Item	Condition	Notes
Operation Temperature (°C)	0~55	
Operation Humidity (%)	8~95	40°C max.
Storage Temperature (°C)	-20~60	
Storage Humidity (%)	5~90	50°C max.

3. Cleaning

Use alcohol-based cleaning solvents to clean the surface of modules if necessary.

4. Drive Method

The modules can be driven as customer's requirement, and we can add a transformer (such as inverter, converter and driver board...etc) in our module to suit the drive specification if necessary.

5. Reliability Test

Item	Name	Condition	Judgment
1	Low Temperature Storage	Storing under -20°C for 96Hrs. Then placing under 25°C for 4 hours before inspection.	A, B, C, D, E, F
2	High Temperature Storage	Storing under 33~75°C for 168Hrs. Then placing under 25°C for 4 hours before inspection. (24 Hrs and 7 cycles)	A, B, C, D, E, F
3	High Temperature and High Humidity Operation	Operating under 20°C ~65°C and 95%RH LED power on for 240Hrs. Then placing under 25°C for 4 hours before inspection.	A, B, C, D, E, F
4	Low Temperature Operation	Operating under -20°C LED power on for 96Hrs. Then placing under 25°C for 4 hours before inspection.	A, B, C, D, E, F
5	High Temperature Operation	Operating under 65°C LED power on for 96Hrs. Then placing under 25°C for 4 hours before inspection.	A, B, C, D, E, F
6	Thermal Shock	[(-200C, 2Hrs)→(-200C~600C, <= 2minute)→(600C, 2Hrs)]/cycle, 4 Hrs/cycle for 3cycles, Then placing under 25°C for 4 hours before inspection.	A, B, C, D, E, F

Application Note

7	Lead Wire Strength	Pulling with 1.5Kgf force vertically. And then test X, Y and Z for 10 seconds.	A, B, F
8	Connector Strength	Tensile strength has to be more than 1.5Kgf force.	A, B, F

Criteria:

A. When the LED is powered on; all functions have to be normal.

B. Exceptional appearance is not accepted.

C. Luminance must maintain more than 60%.

D. The change of uniformity should be within 30%.

E. Color shift must be in 0.02.

F. There must be no breakages, cracks and scrapes appeared on the appearance.

IrDA

Lite-On Technology is the first and only supplier that offers a complete IrDA solution. Infrared (IR) is the most cost effective, proven technology to accomplish short-range and high speed wireless data transfer. Products include IrDA transceivers with SIR (115.2kps), MIR (1.15Mbps) to FIR (4Mbps) data transfer speed, and a complete range of IrDA protocol stacks that help to ensure customers achieve maximum applications performance while realizing the benefits of faster time-to-market and reduced system cost.

Standard Power SIR 115Kb/s Infrared Transceivers

2.7(L) x 9.1(W) x 3.65(H)mm

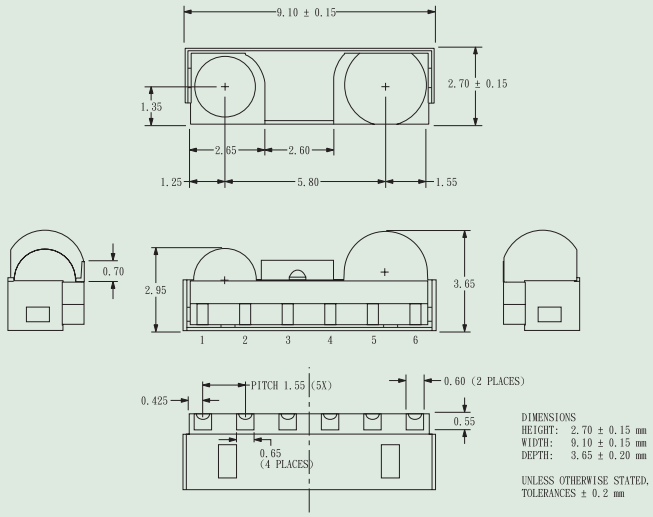

Part No.	Description	Link Distance (M)	Idle Current (mA)	Shutdown Current (nA)	Receiver Latency µS	Supply Voltage (V)	IO Vcc Interface (V)
HSDL-3000	IrDA compliant standard power 115.2kbit/s Infrared transceiver	0 to 1.0	0.29	10	25	2.7 to 5.5	No

Standard Power SIR 115Kb/s Infrared Transceivers

4.0(L) x 12.2(W) x 5.1(H)mm

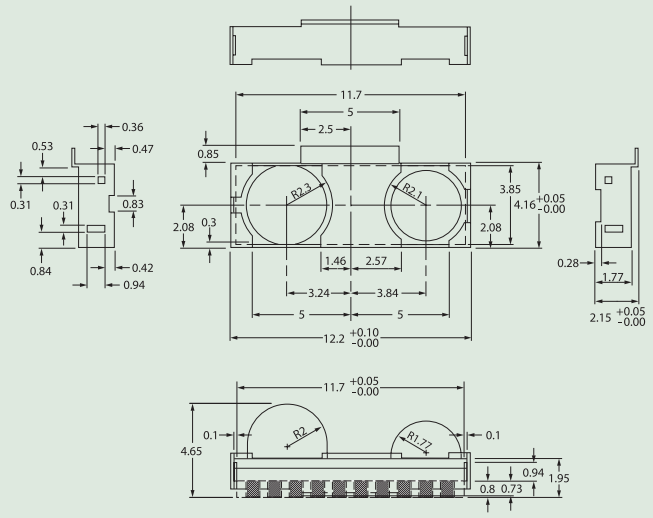

Part No.	Description	Link Distance (M)	Idle Current (mA)	Shutdown Current (nA)	Receiver Latency µS	Supply Voltage (V)	IO Vcc Interface (V)
HSDL-3612	IrDA compliant standard power 115.2kbit/s Infrared transceiver	0 to 1.0	2.5	10	20	2.7 to 5.25	No

Low Power SIR 115Kb/s Infrared Transceivers

2.5(L) x 8.0(W) x 3.0(H)mm

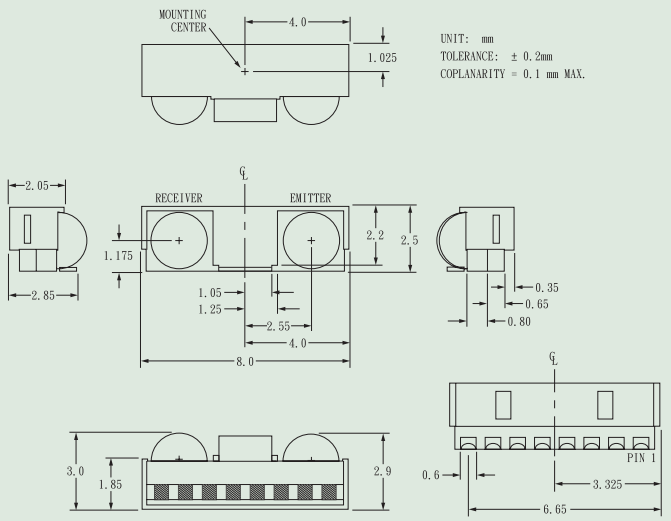

Part No.	Description	Link Distance (M)	Idle Current (mA)	Shutdown Current (nA)	Receiver Latency µS	Supply Voltage (V)	IO Vcc Interface (V)
HSDL-3201	IrDA data compliant low power 115.2kbit/s Infrared	0 to 0.3	0.1	20	25	2.7 to 3.6	No

Standard and Low Power FIR 4Mb/s Infrared Transceivers

4.0(L) x 12.2(W) x 4.9(H)mm

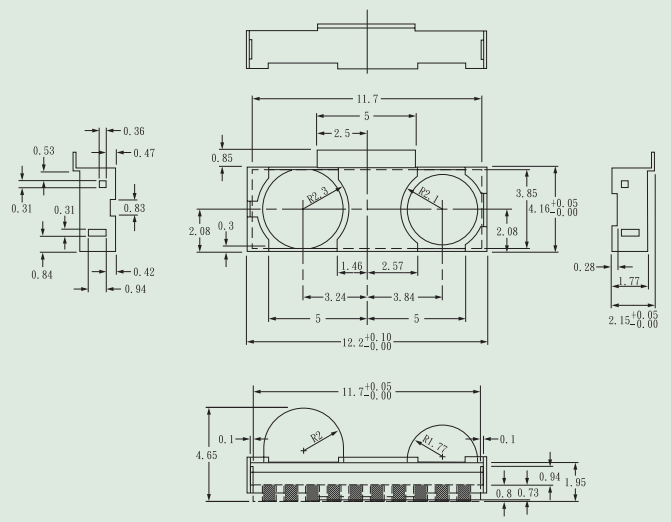

Part No.	Description	Link Distance (M)	Idle Current (mA)	Shutdown Current (nA)	Receiver Latency µS	Supply Voltage (V)	IO Vcc Interface (V)
HSDL-3602	IrDA data compliant standard power 4.0Mbit/s Infrared transceiver	0 to 1.0	2.5	10	40	2.7 to 3.6	No

Low Power SIR 115Kb/s Infrared Transceivers

1.6(L) x 7.0(W) x 2.8(H)mm

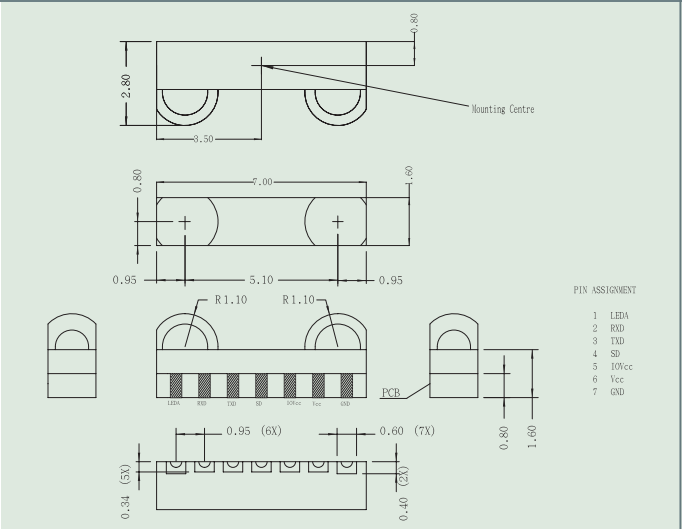

Part No.	Description	Link Distance (M)	Idle Current (mA)	Shutdown Current (nA)	Receiver Latency µS	Supply Voltage (V)	IO Vcc Interface (V)
HSDL-3208	IrDA data compliant low power 115.2kbit/s Infrared	0 to 0.3	0.1	1	70	2.4 to 3.6	No
HSDL-3209	IrDA data compliant low power 115.2kbit/s Infrared	0 to 0.3	0.1	-	50	2.4 to 3.6	1.5

Standard and Low Power FIR 4Mb/s Infrared Transceivers

2.5(L) x 8.0(W) x 3.0(H)mm

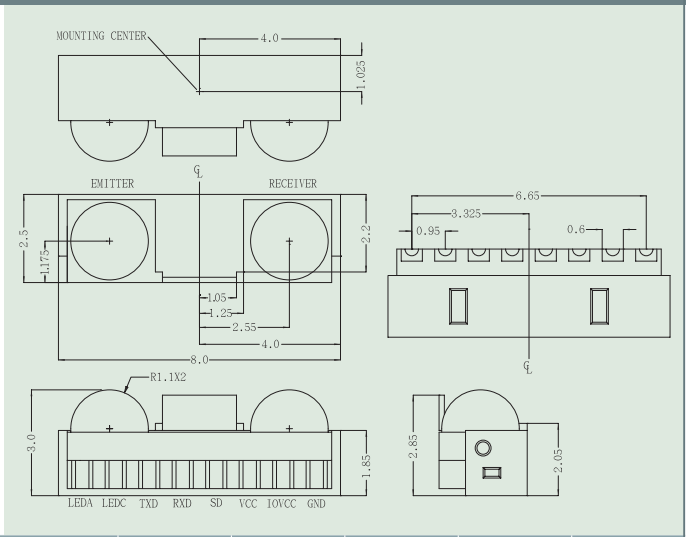

Part No.	Description	Link Distance (M)	Idle Current (mA)	Shutdown Current (nA)	Receiver Latency µS	Supply Voltage (V)	IO Vcc Interface (V)
HSDL-3220	IrDA data compliant low power 4.0Mbit/s Infrared transceiver	0 to 0.5	1.8	100	25	2.7 to 3.6	1.8

SIR 115Kb/s Infrared + Remote Control Transceivers

1.6(L) x 7.0(W) x 2.8(H)mm

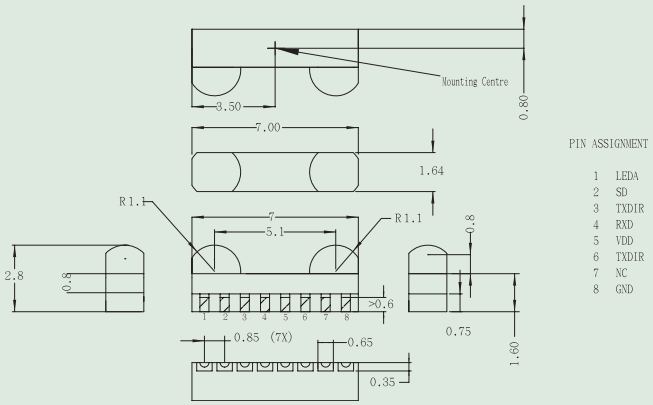

Part No.	Description	Link Distance (M)	Idle Current (mA)	Shutdown Current (nA)	Receiver Latency µS	Supply Voltage (V)	IO Vcc Interface (V)
ASDL-3007	IrDA data compliant low power 115.2Kbit/s with remote control infrared	0 to 0.5(SIR); 7(RC)	0.06	30	200 (max)	2.4 to 3.6	Yes

FIR 4Mb/s Infrared + Remote Control Transceivers

2.5(L) x 8.8(W) x 3.0(H)mm

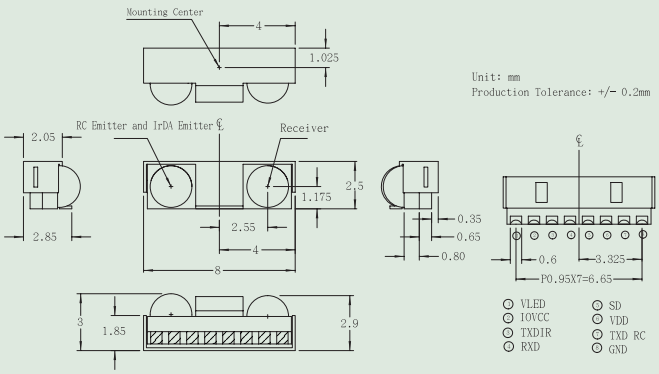

Part No.	Description	Link Distance (M)	Idle Current (mA)	Shutdown Current (nA)	Receiver Latency µS	Supply Voltage (V)	IO Vcc Interface (V)
HSDL-3021	IrDA data compliant low power 4.0Mbit/s with remote control infrared transceiver	0 to 0.5(FIR); 8(RC)	2	1000 (max)	100 (max)	2.4 to 3.6	1.5

FIR 4Mb/s Infrared + Remote Control Transceivers

2.5(L) x 10.4(W) x 2.95(H)mm

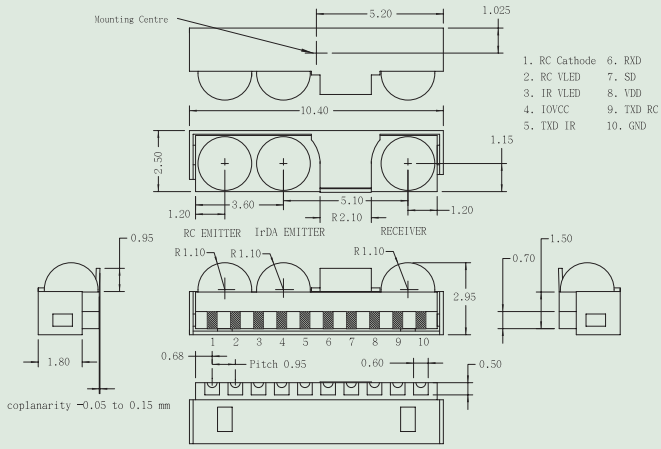

Part No.	Description	Link Distance (M)	Idle Current (mA)	Shutdown Current (nA)	Receiver Latency µS	Supply Voltage (V)	IO Vcc Interface (V)
HSDL-3020	IrDA data compliant low power 4.0Mbit/s with remote control infrared transceiver	0 to 0.5(FIR); 14(RC)	2	1000 (max)	100 (max)	2.4 to 3.6	1.5

FIR 4Mb/s Infrared + Remote Control Transceivers

1.75(L) x 7.5(W) x 2.75(H)mm

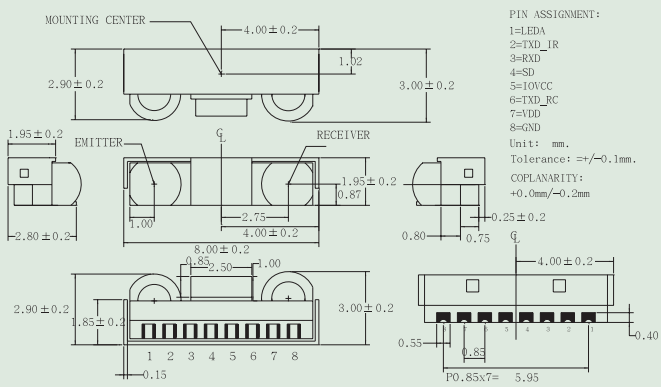

Part No.	Description	Link Distance (M)	Idle Current (mA)	Shutdown Current (nA)	Receiver Latency µS	Supply Voltage (V)	IO Vcc Interface (V)
ASDL-3023	Small form factor IrDA data compliant low power 4.0Mbit/s with remote control infrared transceiver	0 to 0.2(FIR); 8(RC)	2	1000 (max)	100 (max)	2.4 to 3.6	1.5

SIR Interface ICs

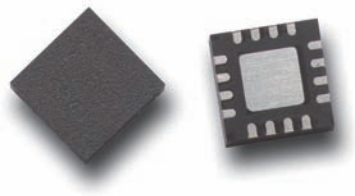

0.8(L) x 4.0(W) x 4.0(H)mm

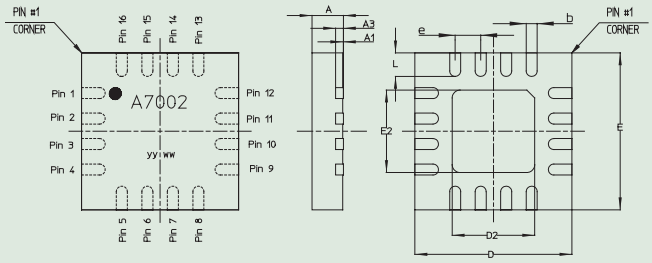

Part No.	Description	Sypply Voltage (V)	Operating Temp (C)	Power Dissipation (W)	Internal Clock	Max Clock Frequency (MHz)	Min Pulse Width (ns)	Package
HSDL-7002	SIR Infrared encoder-decoder chip	2.7 to 5.5	-40 to 85	0.46	Yes	1.8	1628	16 pin QFN

FIR/VFIR Controller ICs

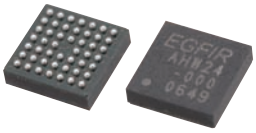

1.2(L) x 4.0(W) x 4.0(H)mm

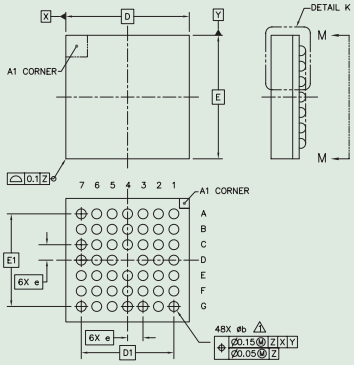

Part No.	Description	Sypply Voltage (V)	Operating Temp (C)	Internal Clock	External Clock	Input Clock (MHz))	Package
ASDL-7021	IrDA FIR/VFIR controller in TIFBGA package	Core power SS=1.8; Clock Power SS=33; IO Power SS=1.8, 2.5, 3.3	-40 to 85	Yes	Yes	48	48 pin TIFBGA

SMD Infrared Emitter

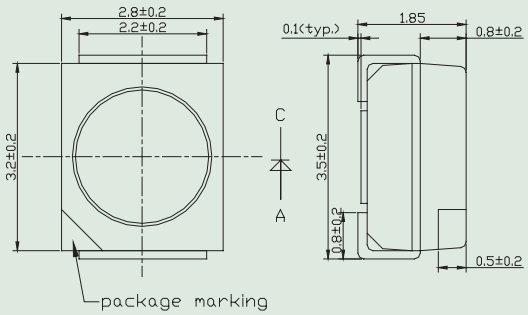

Part No.	Description	tr/tf (ns)	Viewing Angle	On Axis Intensity (mW/Sr)	Wavelength(nm)	Device Type
ASDL-4360	High power and high speed infrared emitter	20/17	120	10	885	PLCC2

SMD Infrared Emitter

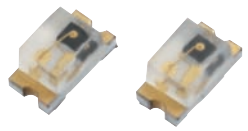

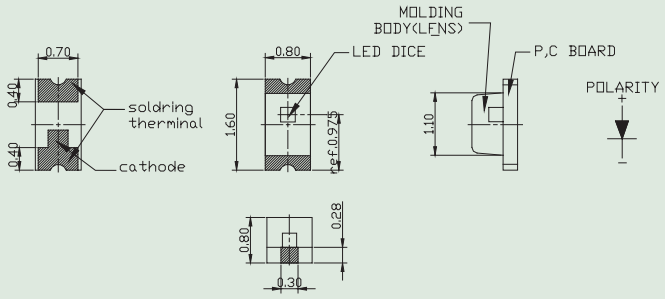

Part No.	Description	tr/tf (ns)	Viewing Angle	On Axis Intensity (mW/Sr)	Wavelength(nm)	Device Type
ASDL-4561	High performace infrared emitter	20/17	150	2.2 at IF=50mA	870	0603 ChipLED

SMD Infrared Emitter

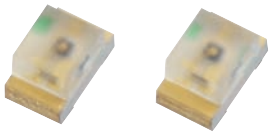

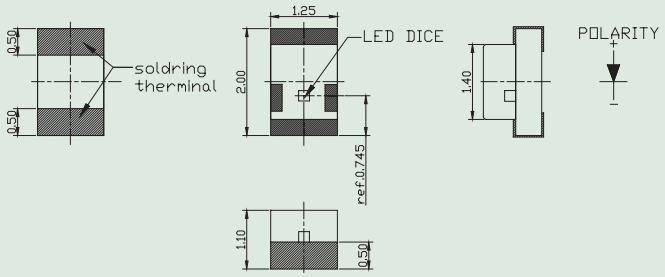

Part No.	Description	tr/tf (ns)	Viewing Angle	On Axis Intensity (mW/Sr)	Wavelength(nm)	Device Type
ASDL-4560	High performace infrared emitter	15/10	150	2.8 at IF=50mA	875	0805 ChipLED

SMD Infrared Emitter

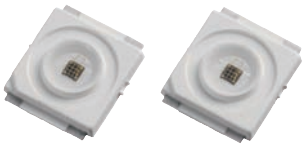

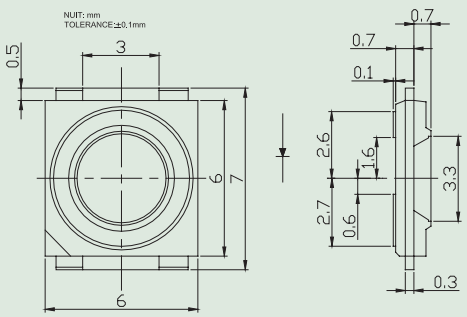

Part No.	Description	tr/tf (ns)	Viewing Angle	On Axis Intensity (mW/Sr)	Wavelength(nm)	Device Type
ASDL-4860	High power infrared emitter	15/10	120	48 at IF=500mA	850	Top Emitting

SMD Infrared Emitter

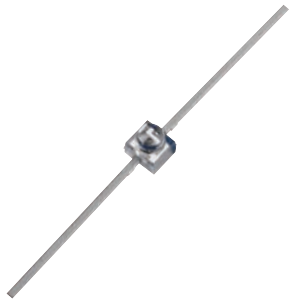

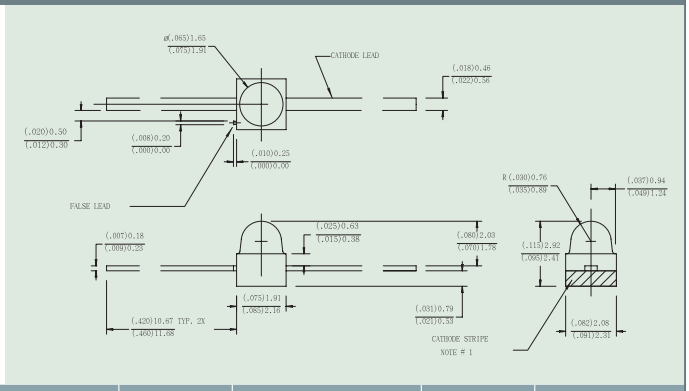

Part No.	Description	tr/tf (ns)	Viewing Angle	On Axis Intensity (mW/Sr)	Wavelength(nm)	Device Type
HSDL-4400	High performace infrared emitter	40	110	6	875	2x2 mm SMT
HSDL-4420	High performace infrared emitter	40	24	32	875	2x2 mm SMT

Subminiature SMT/Thru-Hole Package Infrared Emitter

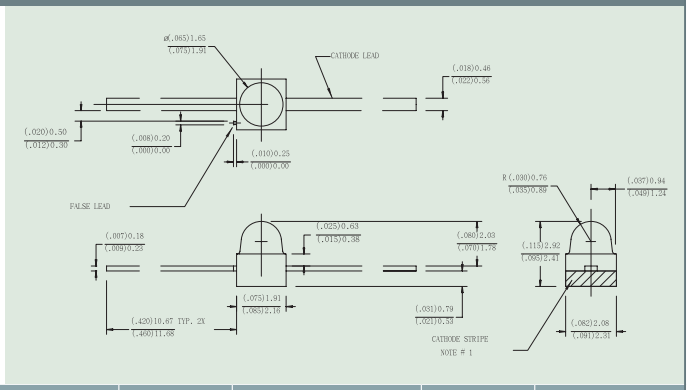

Part No.	Description	tr/tf (ns)	Viewing Angle	On Axis Intensity (mW/Sr)	Wavelength(nm)	Device Type
HSDL-4400	High performace infrared emitter	40	110	6	875	2x2 mm SMT
HSDL-4420	High performace infrared emitter	40	24	32	875	2x2 mm SMT

940nm Thru-Hole Package Infrared Emitter

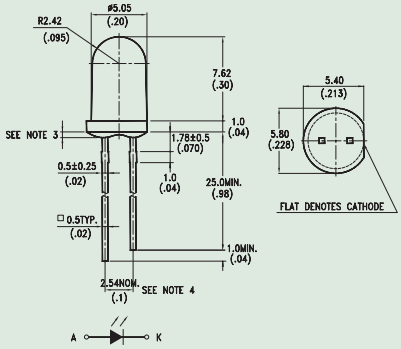

Part No.	Description	tr/tf (ns)	Viewing Angle	On Axis Intensity (mW/Sr)	Wavelength(nm)	Device Type
ASDL-4263	High efficiency AlGaAs/GaAs infrared emitter	1μS	20	9.72 min(Bin A); 12.72min(Bin B); 15.72min(Bin C);	940	T 13/4 lamp
ASDL-4262	High power AlGaAs/GaAs infrared emitter	1μS	50	30	940	T 13/4 lamp
HSDL-4270	High performance AlGaAs infrared emitter	1300	15	100	940	T 13/4 lamp
HSDL-4271	High performance AlGaAs infrared emitter	1300	30	50	940	T 13/4 lamp

940nm Thru-Hole Package Infrared Emitter

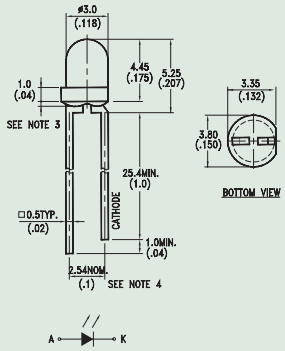

Part No.	Description	tr/tf (ns)	Viewing Angle	On Axis Intensity (mW/Sr)	Wavelength(nm)	Device Type
ASDL-4670	High performance AlGaAs infrared emitter	1μS	60	2.71 at IF=20mA	940	T1

940nm Thru-Hole Package Infrared Emitter

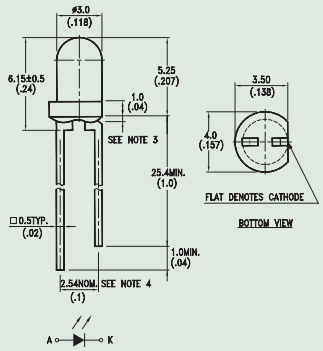

Part No.	Description	tr/tf (ns)	Viewing Angle	On Axis Intensity (mW/Sr)	Wavelength(nm)	Device Type
ASDL-4671	High performance AlGaAs/GaAs infrared emitter	1μS	20	3.91 at IF=20mA	940	T1

940nm Thru-Hole Package Infrared Emitter

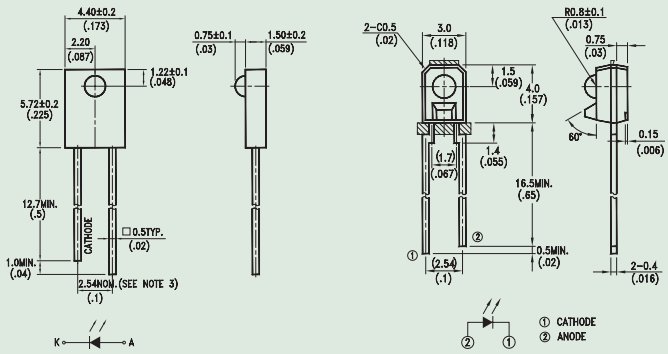

Part No.	Description	tr/tf (ns)	Viewing Angle	On Axis Intensity (mW/Sr)	Wavelength(nm)	Device Type
ASDL-4770	High performance side look AlGaS/GaAs Infrared emitter	1μS	40	1 at IF=20mA	940	Side Look
ASDL-4772	High performance side look AlGaS/GaAs Infrared emitter	1μS	30	1.203 at IF=20mA	940	Side Look

875 and 870nm Thru Hole Infrared Emitter

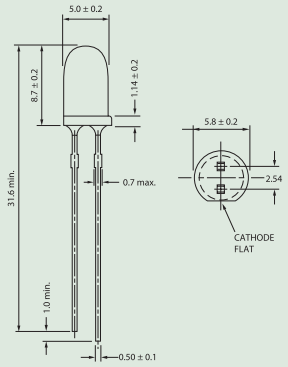

Part No.	Description	tr/tf (ns)	Viewing Angle	On Axis Intensity (mW/Sr)	Wavelength(nm)	Device Type
HSDL-4220	High performance TS AlGaAs Infrared emitter	40	30	76	875	T 13/4
HSDL-4230	High performance TS AlGaAs Infrared emitter	40	17	150	875	T 13/4
HSDL-4250	High performance AlGaAs Infrared emitter	40	15	180	870	T 13/4
HSDL-4251	High performance AlGaAs Infrared emitter	40	30	100	870	T 13/4
HSDL-4260	High power performance AlGaAs Infrared emitter	15	15	200	875	T 13/4
HSDL-4261	High power performance AlGaAs Infrared emitter	15	26	180	870	T 13/4

Photodiode Infrared Detector

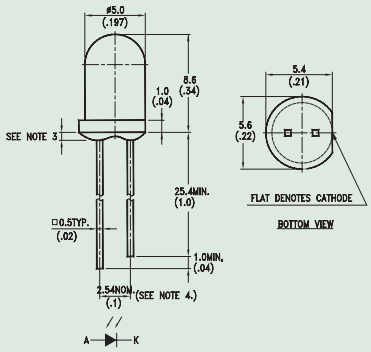

Part No.	Description	Wavelength (nm)	Bandwidth Min Max(nm)	Viewing Angle	Photo Current (µA) typ at 940nm	On-State Collector Current(mA) min at 940nm	Optical Rise/Fall Time Typ(ns)	Operating Temp	Device Type
ASDL-5270	High performance photodiode	900	700 to 1100	60	13	NA	50	-40 to 85	T 13/4

Photodiode Infrared Detector

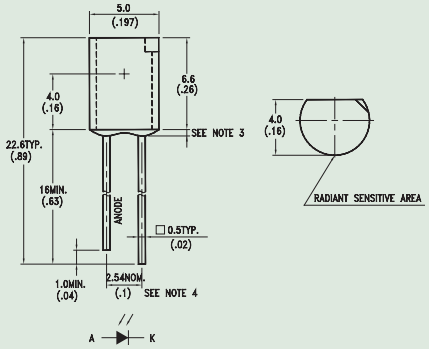

Part No.	Description	Wavelength (nm)	Bandwidth Min Max(nm)	Viewing Angle	Photo Current (μA) typ at 940nm	On-State Collector Current(mA) min at 940nm	Optical Rise/Fall Time Typ(ns)	Operating Temp	Device Type
ASDL-5770	High performance photodiode	900	700 to 1100	140	2	NA	50	-40 to 85	Side Look

Photodiode Infrared Detector

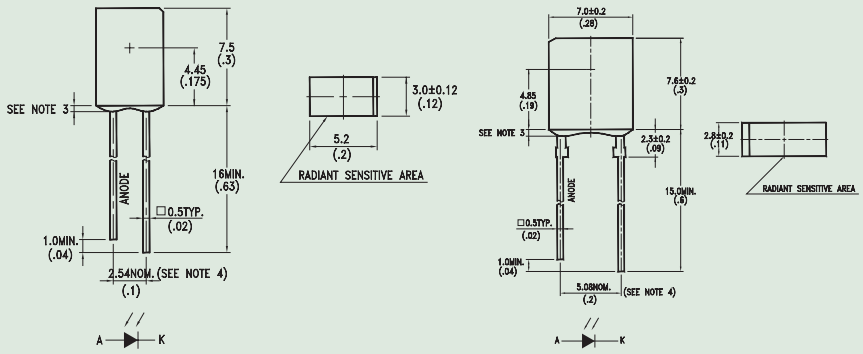

Part No.	Description	Wavelength (nm)	Bandwidth Min Max(nm)	Viewing Angle	Photo Current (μA) typ at 940nm	On-State Collector Current(mA) min at 940nm	Optical Rise/Fall Time Typ(ns)	Operating Temp	Device Type
ASDL-5771	High performance photodiode	900	700 to 1100	140	2	NA	50	-40 to 85	Side Look
ASDL-5772	High performance photodiode	900	700 to 1100	140	2	NA	50	-40 to 85	Side Look

Photodiode Infrared Detector

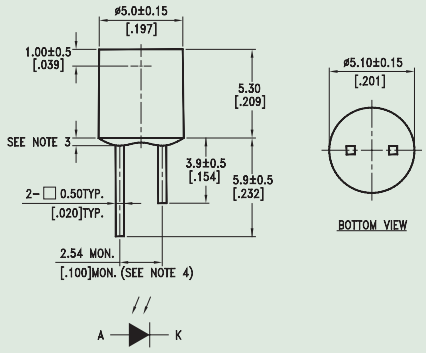

Part No.	Description	Wavelength (nm)	Bandwidth Min Max(nm)	Viewing Angle	Photo Current (μA) typ at 940nm	On-State Collector Current(mA) min at 940nm	Optical Rise/Fall Time Typ(ns)	Operating Temp	Device Type
ASDL-5880	High speed photodiode	900	700 to 1100	180	3	NA	5	-40 to 85	Top View

Photodiode Infrared Detector

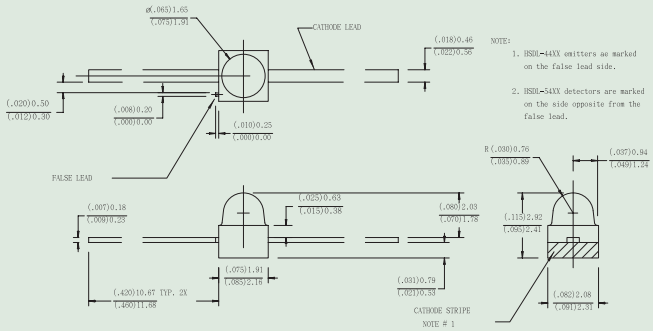

Part No.	Description	Wavelength (nm)	Bandwidth Min Max(nm)	Viewing Angle	Photo Current (μA) typ at 940nm	On-State Collector Current(mA) min at 940nm	Optical Rise/Fall Time Typ(ns)	Operating Temp	Device Type
HSDL-5400	High performance IR pin photodiode	875	770 to 1000	110	1.6	NA	7.5	-40 to 85	SMT
HSDL-5420	High photodiode IR pin photodiode	875	770 to 1000	28	6	NA	7.5	-40 to 85	SMT

Phototransistor Infrared Detector

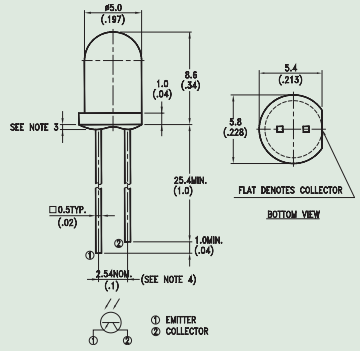

Part No.	Description	Peak Wavelength (nm)	Bandwidth Min Max(nm)	Viewing Angle	Photo Current (μA) typ at 940nm	On-State Collector Current(mA) min at 940nm	Optical Rise/Fall Time Typ(ns)	Operating Temp	Device Type
ASDL-6270	High performance silicon NPN phototransistor	900	700 to 1100	20	NA	≥ 2.4	10/15 μS	-40 to 85	T 13/4(Dark)

Phototransistor Infrared Detector

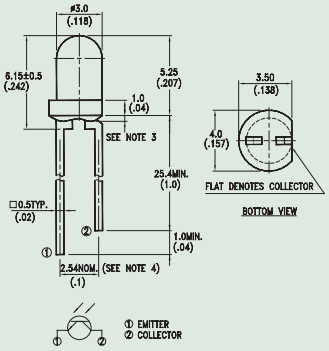

Part No.	Description	Peak Wavelength (nm)	Bandwidth Min Max(nm)	Viewing Angle	Photo Current (μA) typ at 940nm	On-State Collector Current(mA) min at 940nm	Optical Rise/Fall Time Typ(ns)	Operating Temp	Device Type
ASDL-6620	Silicon NPN phototransistor	900	400 to 1100 700 to 1100	20	NA	≥ 1.6	10 μS	-40 to 85	T1

Phototransistor Infrared Detector

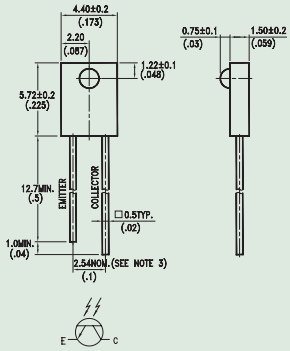

Part No.	Description	Wavelength (nm)	Bandwidth Min Max(nm)	Viewing Angle	Photo Current (μA) typ at 940nm	On-State Collector Current(mA) min at 940nm	Optical Rise/Fall Time Typ(ns)	Operating Temp	Device Type
ASDL-6770	High performance silicon NPN phototransistor	900	400 to 1100	40	NA	≥ 1.04	10/15μS	-40 to 85	Side Look

Phototransistor Infrared Detector

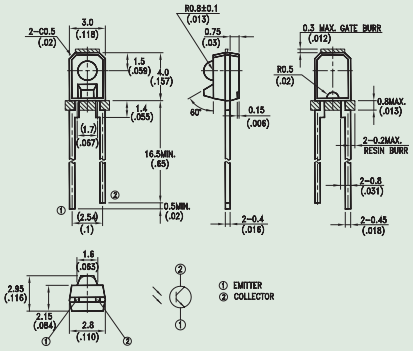

Part No.	Description	Wavelength (nm)	Bandwidth Min Max(nm)	Viewing Angle	Photo Current (μA) typ at 940nm	On-State Collector Current(mA) min at 940nm	Optical Rise/Fall Time Typ(ns)	Operating Temp	Device Type
ASDL-6771	High sensitivity silicon NPN phototransitor	900	400 to 1100	30	NA	≥ 1.2	20μS	-40 to 85	Side Look

Application Note

CAUTIONS for IrDA Transceiver

Infrared (IR) is the most cost effective, proven technology to accomplish short-range, high speed wireless data transfer. Infrared transceiver is a low-cost and small form factor device that is designed to address the mobile computing market such as PDAs, as well as small embedded mobile products such as digital cameras and mobile phones. Some of the infrared transceivers are integrated with Universal Remote Control capability that enables mobile phones and PDAs to function as universal IR remote control devices.

The infrared transceiver's TXD data input is buffered to allow for CMOS drive levels. No peaking circuit or capacitor is required. Following diagram shows the hardware reference design with the infrared transceiver for a mobile phone application.

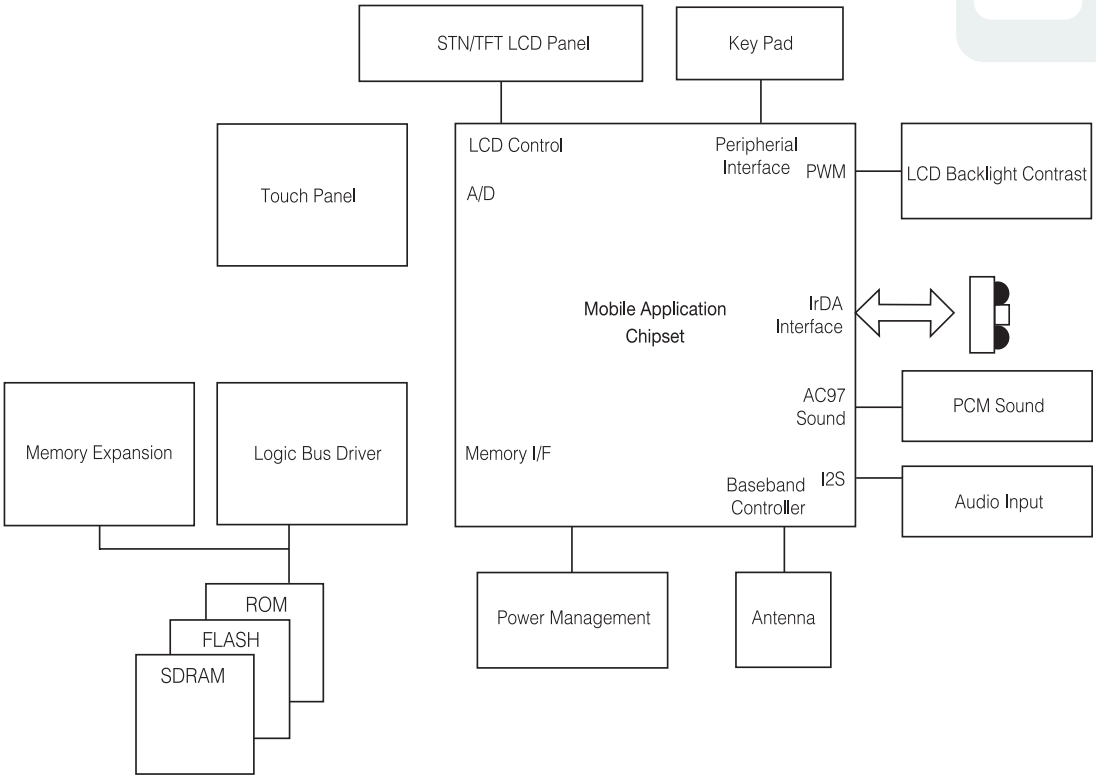

Mobile Application Platform

The use of the infrared techniques for data communication has increased rapidly lately and almost all mobile application processors have built in the IR port. This does away with the requirement of an external Endec and simplifies the interfacing to a direct connection between the processor and the infrared transceiver. The next section discusses interfacing configuration with a general processor.

Application Note

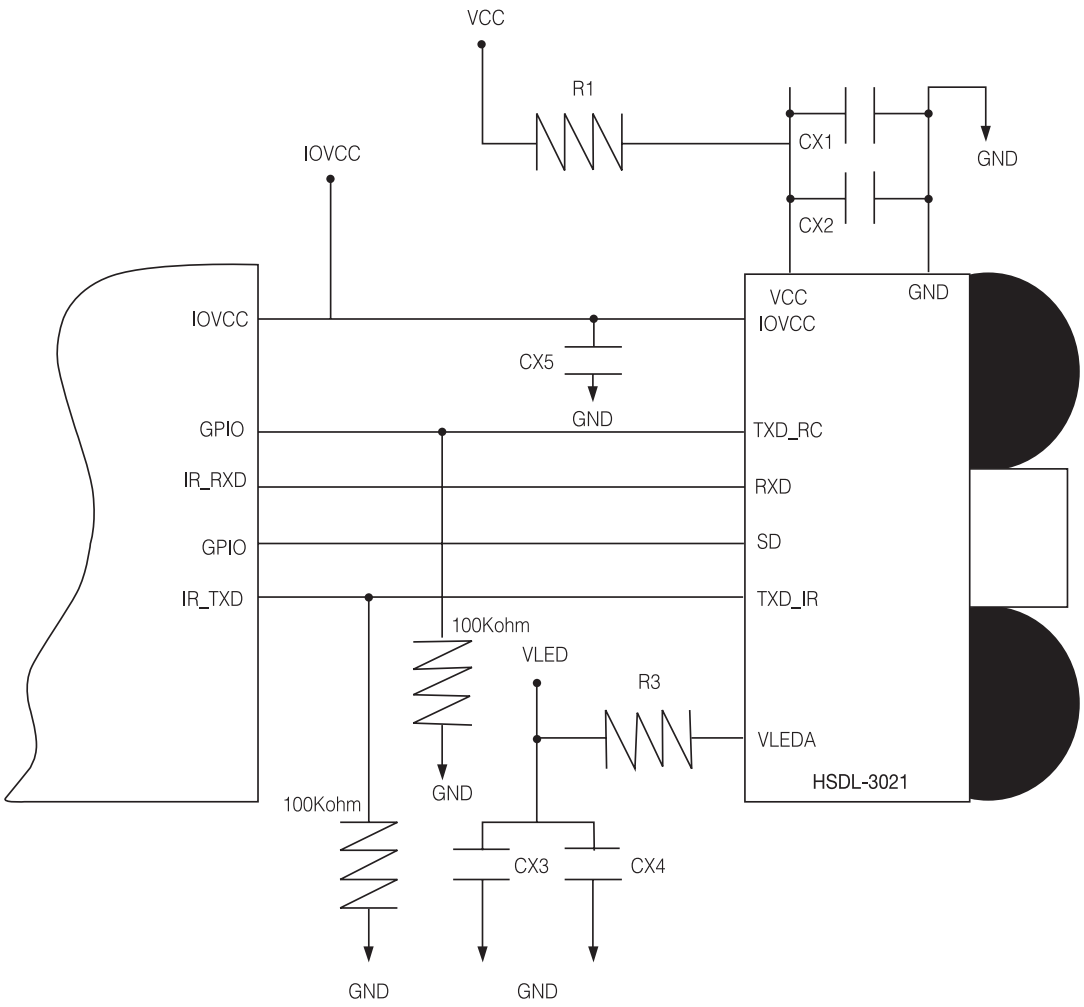

Infrared transceiver configuration with a general mobile architecture processor

Ambient Light Photo Sensor

Sensing solutions have evolved through the years from discrete components for the industrial market, to fully integrated solutions for use in the mobile and consumer electronics sector. Ambient Light Photo Sensor is designed to detect the bright & dim ambient light conditions to control display and/or keypad backlighting. This will help to reduce eye strain for comfortable vision, increase lamp life and minimizing power consumption which are designing to meet the requirements of our current and emerging applications in the consumer electronics, industrial and mobile markets.

Ambient Light Photo Sensor

Ambient Light Photo Sensor

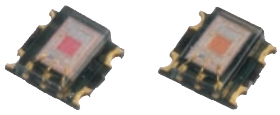

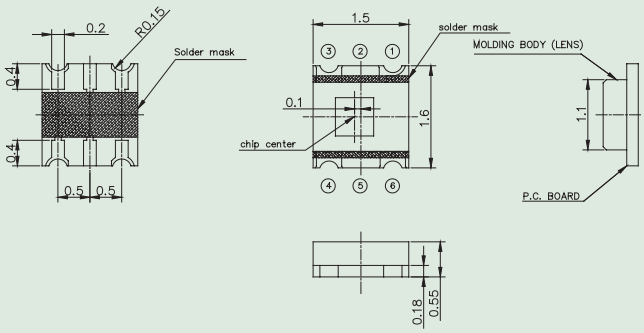

Part No.	Description	Dimension (mm)	VCC(V) min max	Operating Temp	Dark Current
LTR-195ALS-21	OEIC with human luminosity curve	1.60x1.50x0.55	2.7 to 5.5	-30 to 85	200 (Max)

Ambient Light Photo Sensor

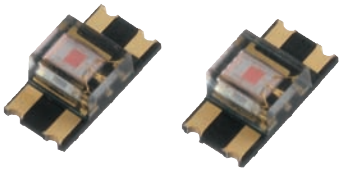

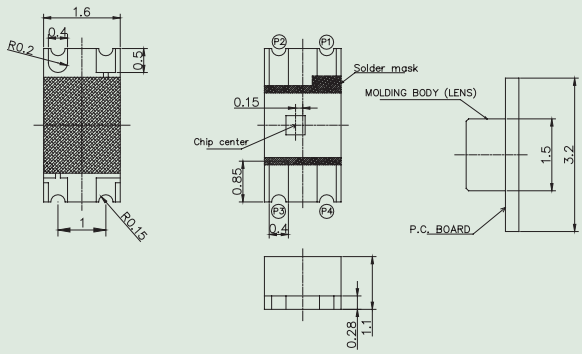

Part No.	Description	Dimension (mm)	VCC(V) min max	Operating Temp	Dark Current
LTR-230ALS-21	OEIC with human luminosity curve at 570nm in a reverse mount package	1.6x3.2x1.1	2.7 to 5.5	-30 to 85	300nA (Max)

Application Note

Analogue Output Ambient Light Photo Sensors

An ambient light photo sensor is used to measure the ambient light level in the environment as perceived by the human eye. It is designed to detect bright and dim ambient light conditions as a means of controlling the brightness of LCD display and/or keypad backlight.

LiteOn analogue output ambient light photo sensors are able to produce a high gain photocurrent that can be converted to an output voltage via an external load resistor. The photocurrent varies linearly with respect to changes in the ambient light environment. Selection of the value of the load resistor will determine the amount of current-to-voltage conversion in the circuit.

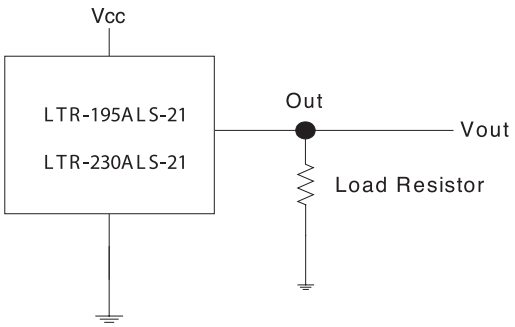

General Application Circuit

Lite-On analogue output ambient light photo sensor can be integrated directly into systems whose microcontroller has an available ADC. Almost all mobile / computing application processors do have built-in ADC. This does away with the requirement for external components to perform signal processing function and simplifies the interface connection between the microcontroller and the ambient light photo sensor.

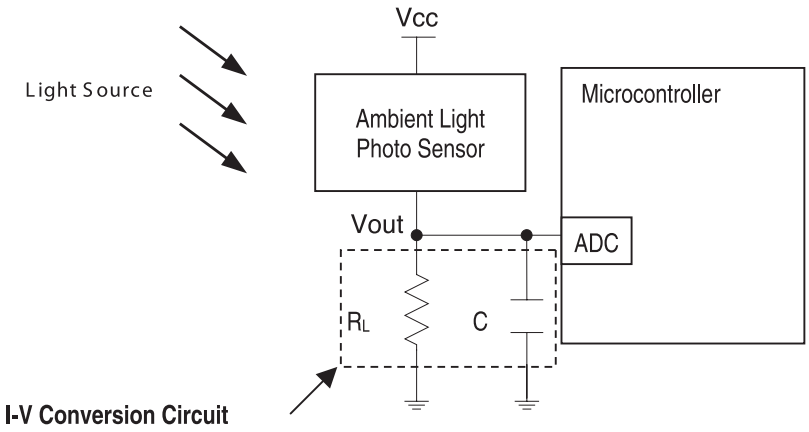

Ambient Light Photo Sensor Configuration with a General Microcontroller

Application Note

In mobile applications, the light source used for keypad/LCD display backlight is using LED array. LED array backlights are driven by LED driver with the brightness being determined by the amount of drive current. A reference block diagram of integrating analogue output ambient light photo sensor with LED array backlight is given below.

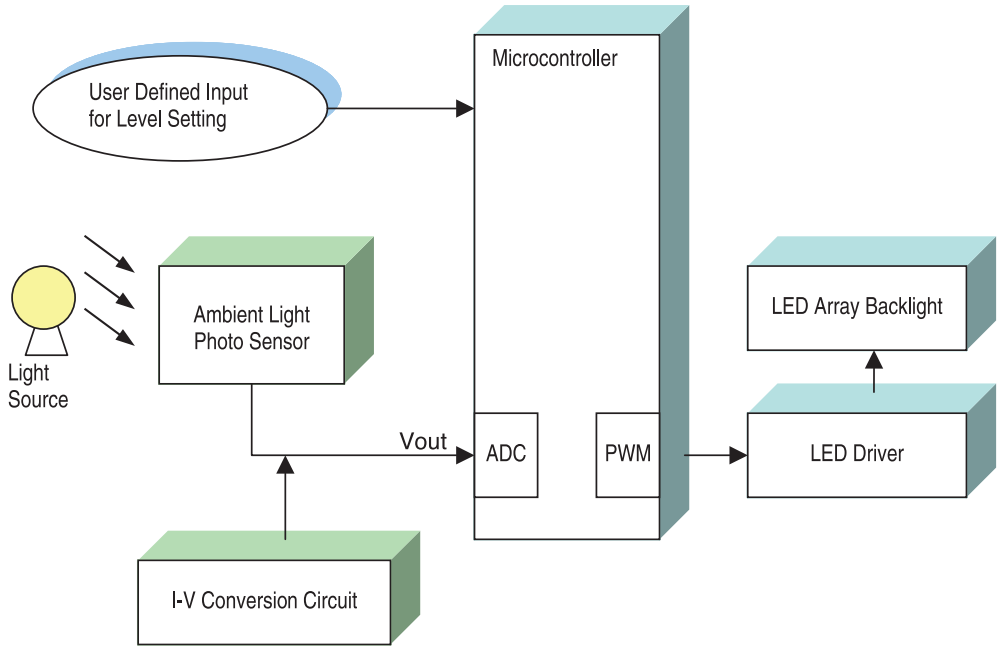

Reference Block Diagram Implementing Ambient Light Photo Sensor in Mobile Application

In notebook applications, the light source used for LCD display backlight is using CCFL backlight. CCFL backlights are driven by inverter board with the brightness being determined by the amount of drive current. A reference block diagram of integrating LiteON analogue output ambient light photo sensor with CCFL backlight is given below.

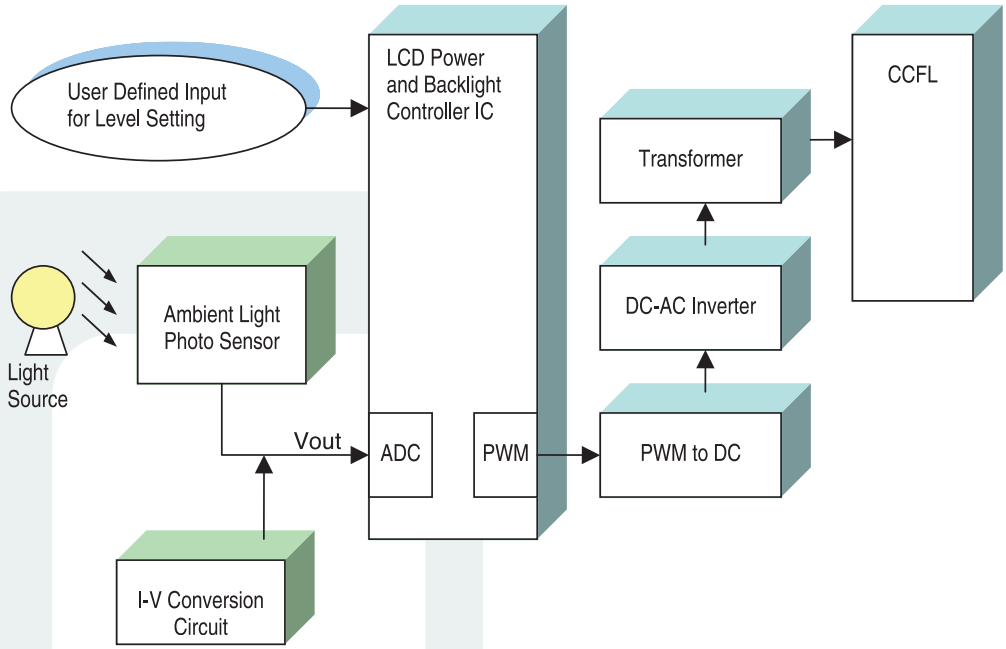

Reference Block Diagram Implementing Ambient Light Photo Sensor in Notebook Application

PTIR (Through Hole & SMD)

Lite-On offers a broad range of discrete infrared components for application such as remote control, IR wireless data transmission, security alarm & etc. Customers need infrared solutions featuring high power, high speed, wide viewing angels, high signal noise ratio and UL safety approval. The product line includes GaAs 940nm IREDs, AIGaAs high power 880nm IREDs, AIGaAs high speed 875nm/850nm IREDs, PIN Photodiodes, Phototransistors and Photodarlingtons. Photodiodes and Phototransistors can be provided with a filter that reduces ambient light noise in the sensor function, which enables a high signal-to-noise ratio.

PTIR (Through Hole & SMD)

Infrared Emitting Diodes - Top View

T-1 3/4 Top View 0.1" Pitch 5 ϕ

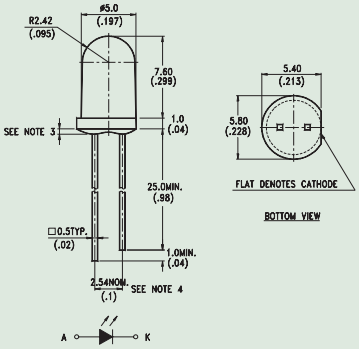

Part No.	Wave Length λ p	Lens Color	Typical Viewing Angle 2 θ1/2*	Aperture Radiant Incidance (Radiant Intensity) Ee Typ.(Ie Typ.)	Forward Voltage V_F Typ. @ I_F=20mA
LTE-3279K	940nm	Light Blue Transparent	60°	6.7mW/cm² (50.0mW/sr) @ I_F=100mA	1.4V @I_F=100mA

Infrared Emitting Diodes - Top View

T-1 3/4 Top View 0.1" Pitch 5 ϕ

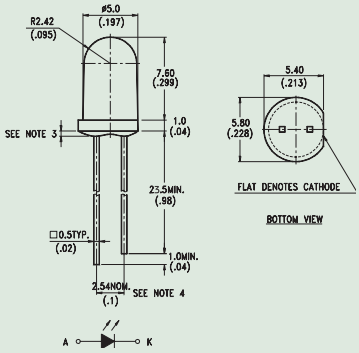

Part No.	Wave Length λ p	Lens Color	Typical Viewing Angle 2 θ1/2*	Aperture Radiant Incidance (Radiant Intensity) Ee Typ.(Ie Typ.)	Forward Voltage V_F Typ. @ I_F=20mA
LTE-3271B	940nm	Water Clear	50°	1.8mW/cm² (13.5mW/sr) @ I_F=20mA	1.25V @I_F=50mA
LTE-3271BL	940nm	Blue Transparent	50°	1.8mW/cm² (13.5mW/sr) @ I_F=20mA	1.25V @I_F=50mA

Infrared Emitting Diodes - Top View

T-1 3/4 Top View 0.1" Pitch 5 ϕ

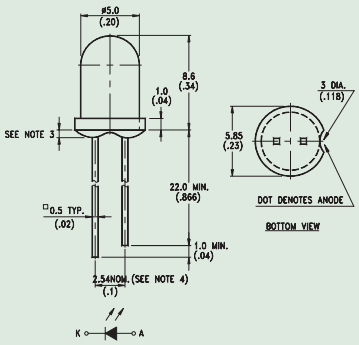

Part No.	Wave Length λ p	Lens Color	Typical Viewing Angle 2 θ1/2*	Aperture Radiant Incidance (Radiant Intensity) Ee Typ.(Ie Typ.)	Forward Voltage V_F Typ. @ I_F=20mA
LTE-5208A	940nm	Water Clear	40°	1.4mW/cm² (10.5mW/sr) @ I_F=20mA	1.2V
LTE-5208AC	940nm	Smoke	40°	1.4mW/cm² (10.5mW/sr) @ I_F=20mA	1.2V

PTIR (Through Hole & SMD)

Infrared Emitting Diodes - Top View

T-1 3/4 Top View 0.1" Pitch 5 ϕ

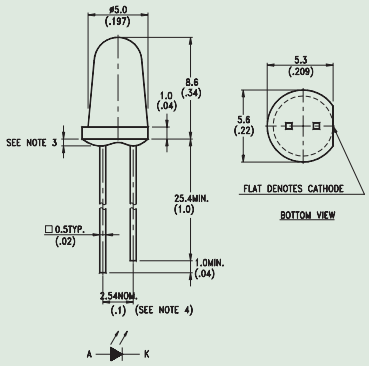

Part No.	Wave Length λ p	Lens Color	Typical Viewing Angle 2 θ1/2*	Aperture Radiant Incidance (Radiant Intensity) Ee Typ.(Ie Typ.)	Forward Voltage V_F Typ. @ I_F=20mA
LTE-2871	940nm	Water Clear	16°	1.6mW/cm² (12.0mW/sr) @ I_F=20mA	1.2V
LTE-2872U	940nm	Water Clear	16°	1.6mW/cm² (12.0mW/sr) @ I_F=20mA	1.2V

Infrared Emitting Diodes - Top View

T-1 3/4 Top View 0.1" Pitch 5 ϕ

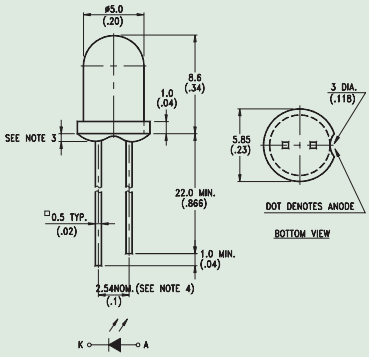

Part No.	Wave Length λ p	Lens Color	Typical Viewing Angle 2 θ1/2*	Aperture Radiant Incidance (Radiant Intensity) Ee Typ.(Ie Typ.)	Forward Voltage V_F Typ. @ I_F=20mA
LTE-5238A	880nm	Water Clear	40°	1.0mW/cm² (7.5mW/sr) @ I_F=20mA	1.3V
LTE-5238AC	880nm	Smoke	40°	1.0mW/cm² (7.5mW/sr) @ I_F=20mA	1.3V

Infrared Emitting Diodes - Top View

T-1 3/4 Top View 0.1" Pitch 5 ϕ

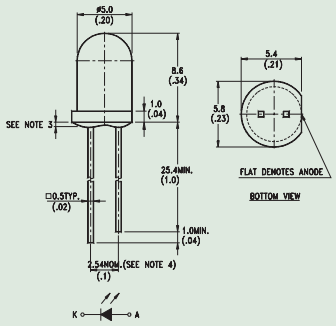

Part No.	Wave Length λ p	Lens Color	Typical Viewing Angle 2 θ1/2*	Aperture Radiant Incidance (Radiant Intensity) Ee Typ.(Ie Typ.)	Forward Voltage V_F Typ. @ I_F=20mA
LTE-4238	880nm	Water Clear	20°	1.4mW/cm² (10.5mW/sr) @ I_F=20mA	1.3V
LTE-4238C	880nm	Smoke	20°	1.4mW/cm² (10.5mW/sr) @ I_F=20mA	1.3V

Infrared Emitting Diodes - Top View

T-1 3/4 Top View 0.1" Pitch 5 ϕ

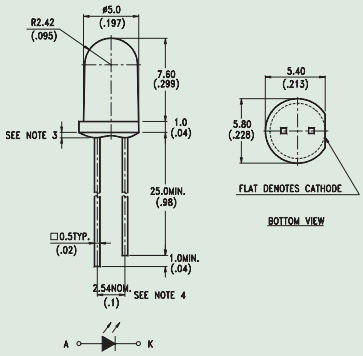

Part No.	Wave Length λ p	Lens Color	Typical Viewing Angle 2 θ1/2*	Aperture Radiant Incidance (Radiant Intensity) Ee Typ.(Ie Typ.)	Forward Voltage V_F Typ. @ I_F=20mA
LTE-3677	875nm	Water Clear	30°	5.1mW/cm² (38.0mW/sr) @ I_F=50mA	1.5V @I_F=50mA

Infrared Emitting Diodes - Top View

T-1 3/4 Top View 0.1" Pitch 5 ϕ

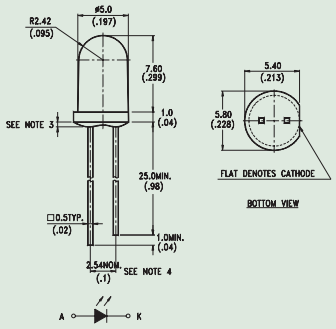

Part No.	Wave Length λ p	Lens Color	Typical Viewing Angle 2 θ1/2*	Aperture Radiant Incidance (Radiant Intensity) Ee Typ.(Ie Typ.)	Forward Voltage V_F Typ. @ I_F=20mA
LTE-3376	850nm	Water Clear	30°	8.0mW/cm² (45.0mW/sr) @ I_F=50mA	1.6V @I_F=50mA

PTIR (Through Hole & SMD)

Infrared Emitting Diodes - Top View

T-1¾ Top View 0.1" Pitch 5 ϕ

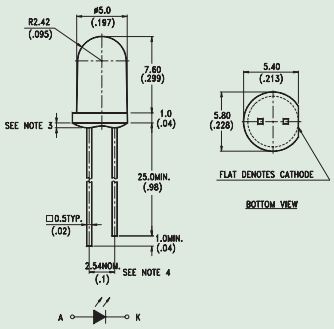

Part No.	Wave Length λ p	Lens Color	Typical Viewing Angle 2 $\theta^{1}/_{2}$*	Aperture Radiant Incidance (Radiant Intensity) Ee Typ.(Ie Typ.)	Forward Voltage V_F Typ. @ I_F=20mA
LTE-3226	850nm	Water Clear	25°	8.75mW/cm² (65.0mW/sr) @ I_F=50mA	1.6V @I_F=50mA

Infrared Emitting Diodes - Top View

T-1¾ Top View 0.1" Pitch 5 ϕ

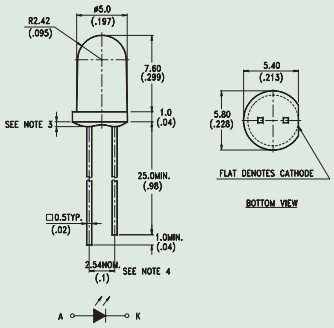

Part No.	Wave Length λ p	Lens Color	Typical Viewing Angle 2 $\theta^{1}/_{2}$*	Aperture Radiant Incidance (Radiant Intensity) Ee Typ.(Ie Typ.)	Forward Voltage V_F Typ. @ I_F=20mA
LTE-3276	850nm	Water Clear	50°	4.25mW/cm² (32.0mW/sr) @ I_F=50mA	1.6V @I_F=50mA

Infrared Emitting Diodes - Top View

T-1 Top View 0.1" Pitch 3 ϕ

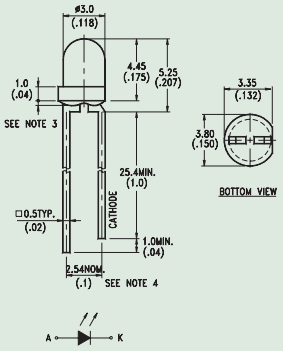

Part No.	Wave Length λ p	Lens Color	Typical Viewing Angle 2 $\theta^{1}/_{2}$*	Aperture Radiant Incidance (Radiant Intensity) Ee Typ.(Ie Typ.)	Forward Voltage V_F Typ. @ I_F=20mA
LTE-1650	940nm	Water Clear	60°	0.5mW/cm² (3.4mW/sr) @ I_F=20mA	1.2V

Infrared Emitting Diodes - Top View

T-1 Top View 0.1" Pitch 3ϕ

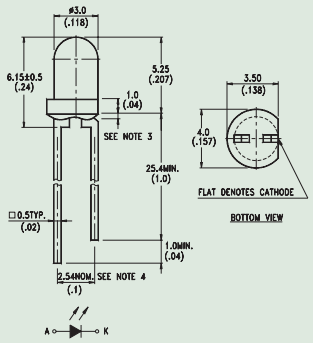

Part No.	Wave Length λ p	Lens Color	Typical Viewing Angle 2 $\theta^{1}/_{2}$*	Aperture Radiant Incidance (Radiant Intensity) Ee Typ.(Ie Typ.)	Forward Voltage V_F Typ. @ I_F=20mA
LTE-4206	940nm	Water Clear	20°	0.7mW/cm² (5.26mW/sr) @ I_F=20mA	1.2V
LTE-4206C	940nm	Smoke	20°	0.7mW/cm² (5.26mW/sr) @ I_F=20mA	1.2V
LTE-4209	850nm	Water Clear	25°	4.4mW/cm² (33mW/sr) @ I_F=50mA	1.5V @ I_F =50mA

Infrared Emitting Diodes - Top View

T-1 Top View 0.1" Pitch 3ϕ

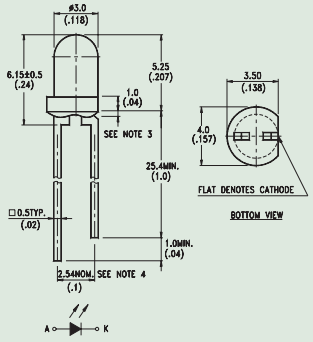

Part No.	Wave Length λ p	Lens Color	Typical Viewing Angle 2 $\theta^{1}/_{2}$*	Aperture Radiant Incidance (Radiant Intensity) Ee Typ.(Ie Typ.)	Forward Voltage V_F Typ. @ I_F=20mA
LTE-1653	940nm	Water Clear	50°	2.0mW/cm² (15mW/sr) @ I_F=50mA	1.25V @ I_F=50mA
LTE-1653K	940nm	Light Blue Transparent	50°	2.0mW/cm² (15mW/sr) @ I_F=50mA	1.25V @ I_F=50mA

PTIR (Through Hole & SMD)

Infrared Emitting Diodes - Side Look

Side Look

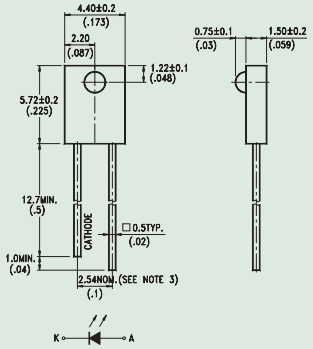

Part No.	Wave Length λ p	Lens Color	Typical Viewing Angle 2 θ1/2*	Aperture Radiant Incidance (Radiant Intensity) Ee Typ.(Ie Typ.)	Forward Voltage VF Typ. @ IF=20mA
LTE-302-M	940nm	Water Clear	40°	**	1.2V

Infrared Emitting Diodes - Side Look

Side Look

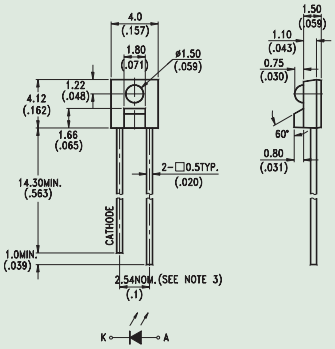

Part No.	Wave Length λ p	Lens Color	Typical Viewing Angle 2 θ1/2*	Aperture Radiant Incidance (Radiant Intensity) Ee Typ.(Ie Typ.)	Forward Voltage VF Typ. @ IF=20mA
LTE-309	940nm	Water Clear	40°	**	1.2V

Infrared Emitting Diodes - Side Look

Side Look

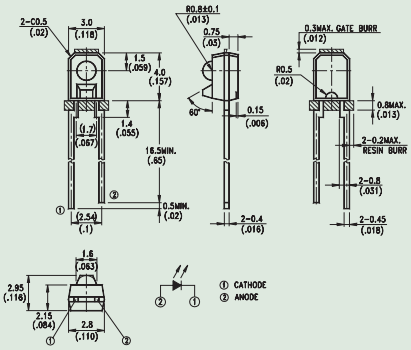

Part No.	Wave Length λ p	Lens Color	Typical Viewing Angle 2 θ1/2*	Aperture Radiant Incidance (Radiant Intensity) Ee Typ.(Ie Typ.)	Forward Voltage VF Typ. @ IF=20mA
LTE-306	940nm	Water Clear	30°	0.2mW/cm² (1.5mW/sr) @ IF=20mA	1.2V

Infrared Emitting Diodes - SMD

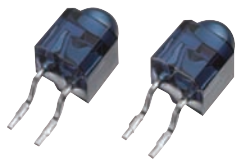

T-1 3/4 SMD Side View 0.1" Pitch 5 ϕ

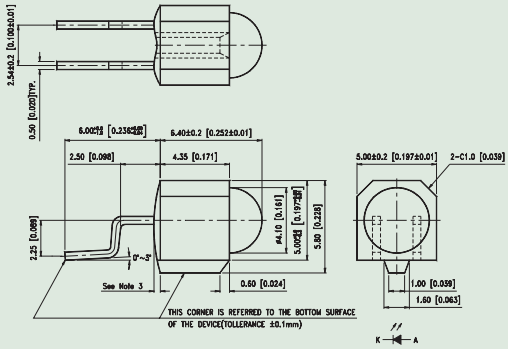

Part No.	Wave Length λ p	Lens Color	Typical Viewing Angle 2 θ1/2*	Aperture Radiant Incidance (Radiant Intensity) Ee Typ.(Ie Typ.)	Forward Voltage V_F Typ. @ I_F=20mA
LTE-7377LM1-TA	880nm	Blue Transparent	16°	2.0mW/cm² (15mW/sr) @ I_F=50mA	1.5V @ I_F=50mA

Infrared Emitting Diodes - Piranha

T-1 3/4 SMD Side View 0.1" Pitch 5 ϕ

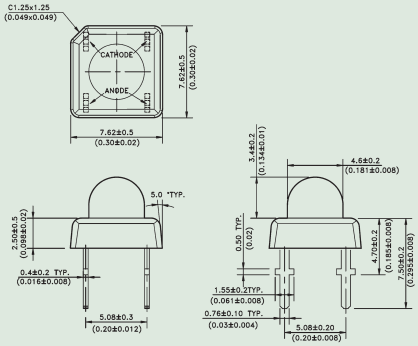

Part No.	Wave Length λ p	Lens Color	Typical Viewing Angle 2 θ1/2*	Aperture Radiant Incidance (Radiant Intensity) Ee Typ.(Ie Typ.)	Forward Voltage V_F Typ. @ I_F=20mA
LTE-916A15	850nm	Water Clear	15°	22mW/cm² (170mW/sr) @ I_F=70mA	1.4V @ I_F=20mA
LTE-916A25	850nm	Water Clear	25°	18mW/cm² (135mW/sr) @ I_F=70mA	1.4V @ I_F=20mA
LTE-919A40	850nm	Water Clear	40°	6.7mW/cm² (50mW/sr) @ I_F=70mA	1.4V @ I_F=20mA
LTE-919A50	850nm	Water Clear	50°	5.3mW/cm² (40mW/sr) @ I_F=70mA	1.4V @ I_F=20mA

PTIR (Through Hole & SMD)

Phototransistors

T-1 3/4 Top View 0.1" Pitch 5 ϕ

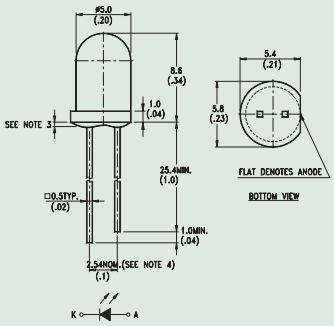

Part No.	Lens Color	Visable Light Filter	Light Current Typ. @Ee=1mW/cm²	Dark Current Min. @V_{CE}=10V	$V_{CE(SAT)}$ Min. @Ic=100μA	V_{CEO} Min. @Ic=1mA
LTR-3208	Water Clear	No	8mA	100nA	0.4V	30V

Phototransistors

T-1 3/4 Top View 0.1" Pitch 5 ϕ

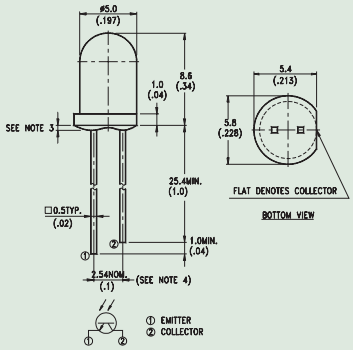

Part No.	Lens Color	Visable Light Filter	Light Current Typ. @Ee=1mW/cm²	Dark Current Min. @V_{CE}=10V	$V_{CE(SAT)}$ Min. @Ic=100μA	V_{CEO} Min. @Ic=1mA
LTR-3208E	Dark	Yes	8mA	100nA	0.4V	30V

Phototransistors

T-1 Top View 0.1" Pitch 3 ϕ

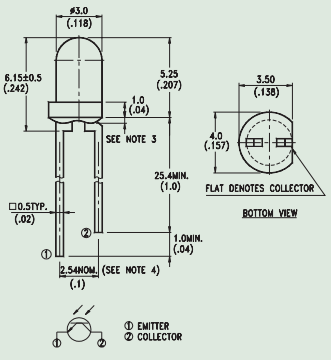

Part No.	Lens Color	Visable Light Filter	Light Current Typ. @Ee=1mW/cm²	Dark Current Min. @V_{CE}=10V	$V_{CE(SAT)}$ Min. @Ic=100μA	V_{CEO} Min. @Ic=1mA
LTR-4206	Water Clear	No	4mA	100nA	0.4V	30V

Phototransistors

T-1 Top View 0.1" Pitch 3ϕ

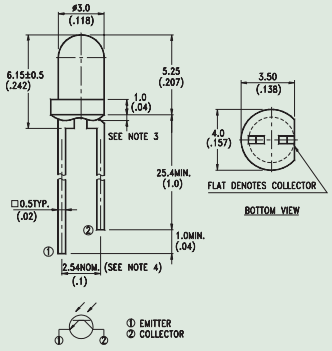

Part No.	Lens Color	Visable Light Filter	Light Current Typ. @Ee=1mW/cm²	Dark Current Min. @V_{CE}=10V	$V_{CE(SAT)}$ Min. @Ic=100μA	V_{CEO} Min. @Ic=1mA
LTR-4206E	Dark	Yes	4mA	100nA	0.4V	30V

Phototransistors

Side Look

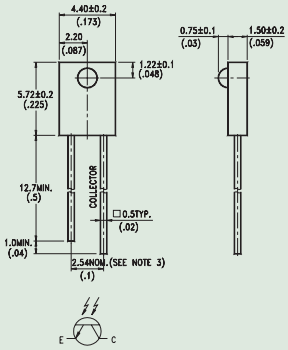

Part No.	Lens Color	Visable Light Filter	Light Current Typ. @Ee=1mW/cm²	Dark Current Min. @V_{CE}=10V	$V_{CE(SAT)}$ Min. @Ic=100μA	V_{CEO} Min. @Ic=1mA
LTR-301	Water Clear	No	2mA	100nA	0.4V	30V

Phototransistors

Side Look

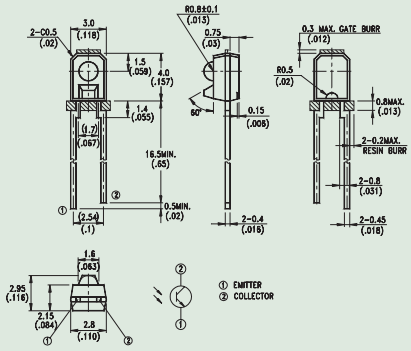

Part No.	Lens Color	Visable Light Filter	Light Current Typ. @Ee=1mW/cm²	Dark Current Min. @V_{CE}=10V	$V_{CE(SAT)}$ Min. @Ic=100μA	V_{CEO} Min. @Ic=1mA
LTR-306	Red Clear	No	2mA	100nA	0.4V	30V

PTIR (Through Hole & SMD)

Phototransistors

Side Look

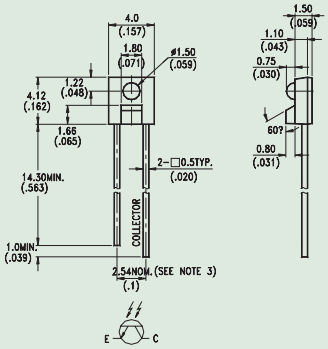

Part No.	Lens Color	Visable Light Filter	Light Current Typ. @Ee=1mW/cm²	Dark Current Min. @VCE=10V	VCE(SAT) Min. @Ic=100μA	VCEO Min. @Ic=1mA
LTR-309	Water Clear	No	2mA	100nA	0.4V	30V

Phototransistors

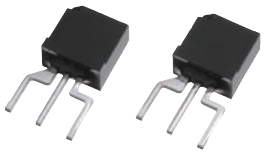

Side Look Tow Bits

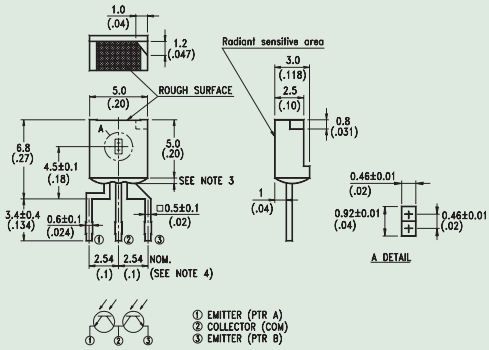

Part No.	Lens Color	Visable Light Filter	Light Current Typ. @Ee=1mW/cm²	Dark Current Min. @VCE=10V	VCE(SAT) Min. @Ic=100μA	VCEO Min. @Ic=1mA
LTR-5579DP1	Dark	Yes	0.3mA	100nA	0.4V	30V

Phototransistors

Side Look Tow Bits

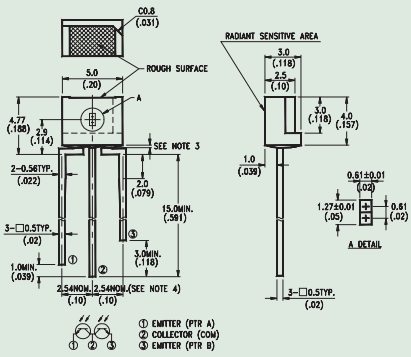

Part No.	Lens Color	Visable Light Filter	Light Current Typ. @Ee=1mW/cm²	Dark Current Min. @VCE=10V	VCE(SAT) Min. @Ic=100μA	VCEO Min. @Ic=1mA
LTR-5986D	Dark	Yes	0.5mA	100nA	0.4V	30V

Phototransistors

Side Look Tow Bits

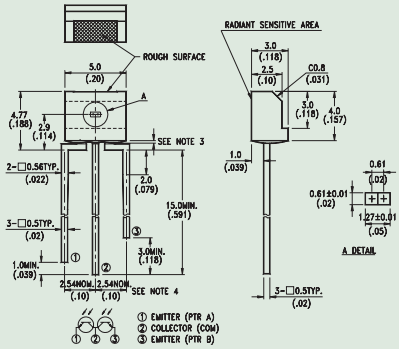

Part No.	Lens Color	Visable Light Filter	Light Current Typ. @Ee=1mW/cm²	Dark Current Min. @V_{CE}=10V	$V_{CE(SAT)}$ Min. @Ic=100μA	V_{CEO} Min. @Ic=1mA
LTR-5986H	Water Clear	No	0.5mA	100nA	0.4V	30V

Photodiodes

T-1³/₄ Top View 0.1" Pitch 5 ϕ

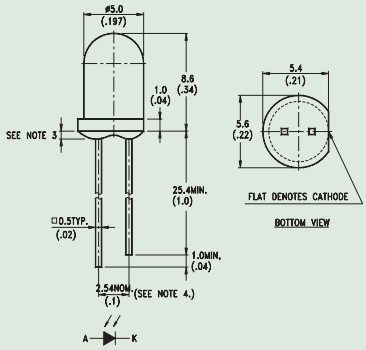

Part No.	Lens Color	Visable Light Filter	Is Typ. @Ee=1mW/cm² V_{CC}=5V	$I_{D(R)}$ Max. @V_R=10V	$V_{(BR)R}$ Min. @I_E=100μA
LTR-323DB	Dark	Yes	13 μA	30nA	30V

Photodiodes

T-1³/₄ Top View 0.1" Pitch 5 ϕ

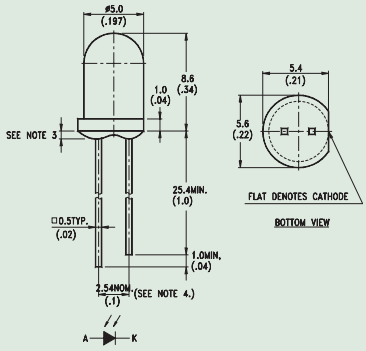

Part No.	Lens Color	Visable Light Filter	Is Typ. @Ee=1mW/cm² V_{CC}=5V	$I_{D(R)}$ Max. @V_R=10V	$V_{(BR)R}$ Min. @I_E=100μA
LTR-323D	Water Clear	No	13 μA	30nA	30V

PTIR (Through Hole & SMD)

Photodiodes

T-1 Top View 0.1" Pitch 3 ϕ

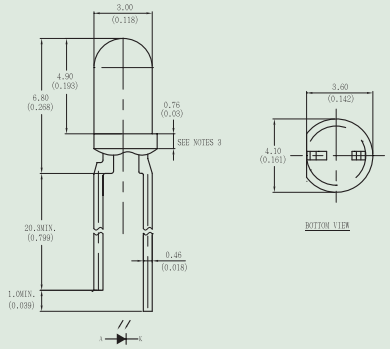

Part No.	Lens Color	Visable Light Filter	Is Typ. @Ee=1mW/cm² V_{CC}=5V	$I_{D(R)}$ Max. @V_R=10V	$V_{(BR)R}$ Min. @I_E=100μA
LTR-10DIDR	Dark	Yes	1.7 μA	10nA	33V

Photodiodes

T-1$^3/_4$ Top View 0.1" Pitch 5 ϕ

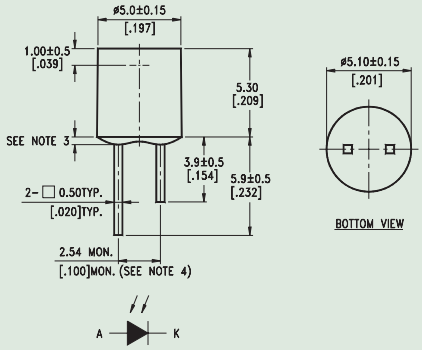

Part No.	Lens Color	Visable Light Filter	Is Typ. @Ee=1mW/cm² V_{CC}=5V	$I_{D(R)}$ Max. @V_R=10V	$V_{(BR)R}$ Min. @I_E=100μA
LTR-763DK-P1	Water Clear	No	1 μA (Ee=1mW/cm²)	30nA	30V

Photodiodes

Side Look

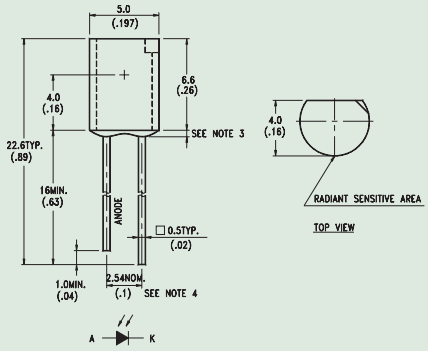

Part No.	Lens Color	Visable Light Filter	Is Typ. @Ee=1mW/cm² V_{CC}=5V	$I_{D(R)}$ Max. @V_R=10V	$V_{(BR)R}$ Min. @I_E=100μA
LTR-516AB	Dark	Yes	2 μA	30nA	30V
LTR-516AD	Dark	Yes	2 μA	30nA	30V

Photodiodes

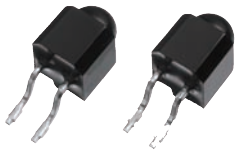

SMD Side Look

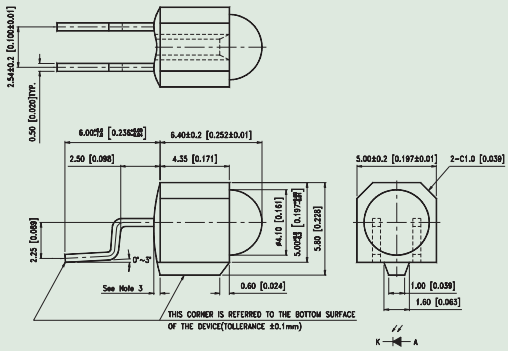

Part No.	Lens Color	Visable Light Filter	Is Typ. @Ee=1mW/cm² V_{CC}=5V	$I_{D(R)}$ Max. @V_R=10V	$V_{(BR)R}$ Min. @I_E=100μA
LTR-733DBM1-TA	Dark	Yes	7 μA	30nA	30V

Photodiodes

Side Look

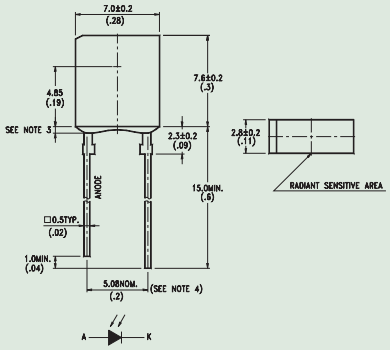

Part No.	Lens Color	Visable Light Filter	Is Typ. @Ee=1mW/cm² V_{CC}=5V	$I_{D(R)}$ Max. @V_R=10V	$V_{(BR)R}$ Min. @I_E=100μA
LTR-546AB	Dark	Yes	2 μA	30nA	30V
LTR-546AD	Dark	Yes	2 μA	30nA	30V

SMD IR

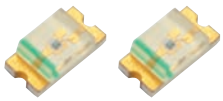

SMD IR

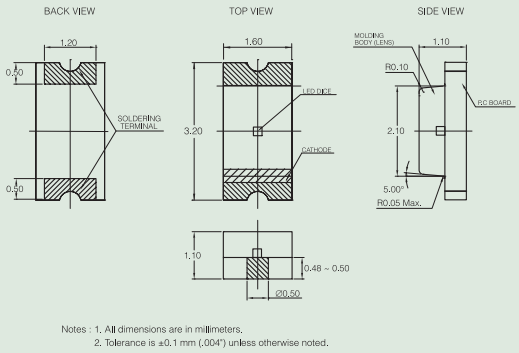

Part No.	Description		Typical Viewing Angle	Radiation Intensity Ie Typ min. (mW/sr) @20mA	V_f Type@IF=20mA
	Wave Length λp	Lens Color			
LTE-C1501	940nm	Clear	130	0.8	1.2
LTE-C1506	850nm	Clear	130	1.05	1.45

PTIR (Through Hole & SMD)

SMD IR

SMD IR

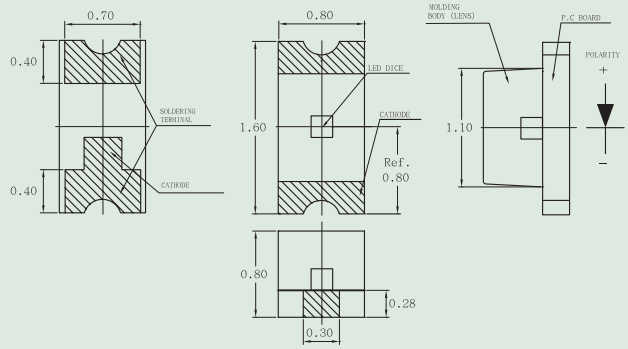

Part No.	Description		Typical Viewing Angle	Radiation Intensity Ie Typ min. (mW/sr) @20mA	V_f Type@IF=20mA
	Wave Length λp	Lens Color			
LTE-C1901	940nm	Clear	130	0.56	1.2
LTE-C1906	850nm	Clear	130	2.3	1.6

SMD IR

SMD IR

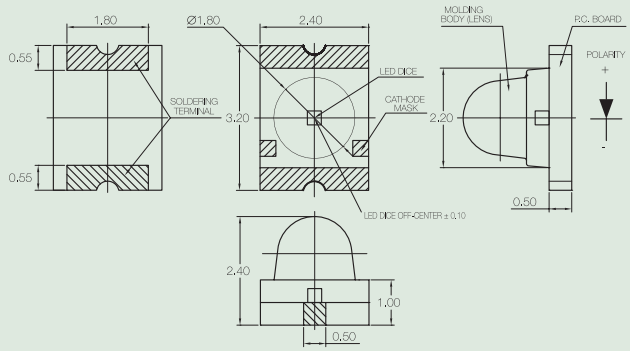

Part No.	Description		Typical Viewing Angle	Radiation Intensity Ie Typ min. (mW/sr) @20mA	V_f Type@IF=20mA
	Wave Length λp	Lens Color			
LTE-C9301	940nm	Clear	25	2.9	1.2
LTE-C9306	850nm	Clear	25	4	1.45

SMD IR

SMD IR

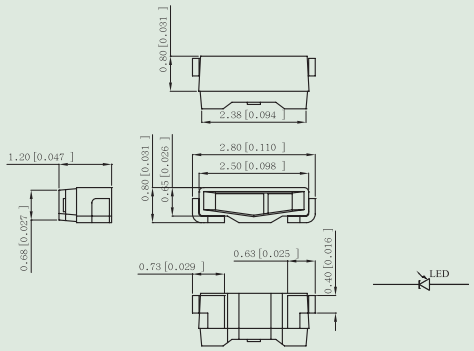

Part No.	Description		Typical Viewing Angle	Radiation Intensity Ie Typ min. (mW/sr) @20mA	V_f Type@IF=20mA
	Wave Length λp	Lens Color			
LTE-S0086	850nm	Clear	120	2.5	1.4

SMD PTR

SMD PTR

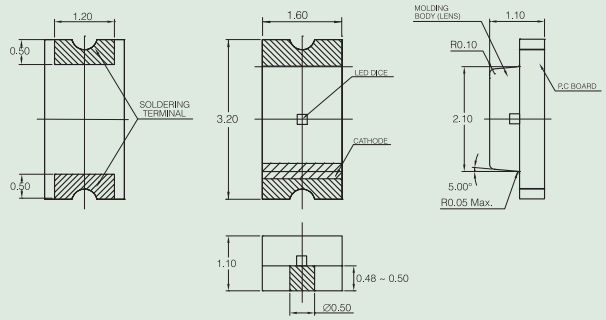

Part No.	Description		Ic(on)min.@V_{CE}=5V Ee=1mW/cm² λ=940νμ	Dark Current max. Ie (nA)@V_{CE}=10V	V_{CE}(SAT) max. Ic=100μA	Vceo Min. @Ic=1mA
	Lens Color	Visable Light Fiber				
LTR-C1503B	Dark	Yes	0.8	100	0.4	30

SMD PTR

SMD PTR

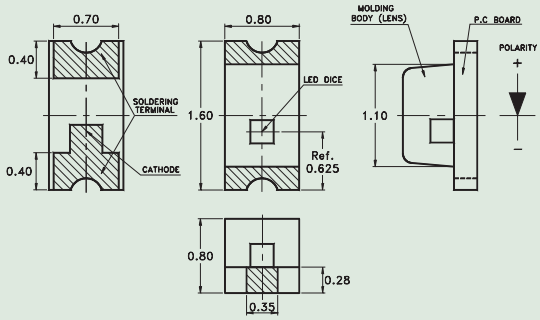

Part No.	Description		Ic(on)min.@V_{CE}=5V Ee=1mW/cm² λ=940νμ	Dark Current max. Ie (nA)@V_{CE}=10V	V_{CE}(SAT) max. Ic=100μA	Vceo Min. @Ic=1mA
	Lens Color	Visable Light Fiber				
LTR-C1903B	Dark	Yes	0.19(Ee=0.5mW/cm²)	100	0.4	30

SMD PTR

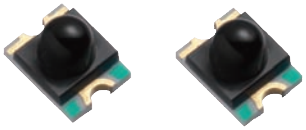

SMD PTR

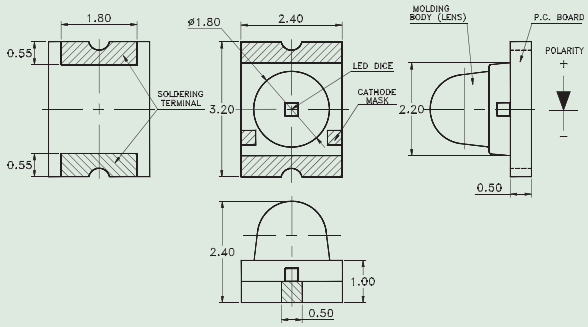

Part No.	Description		Ic(on)min.@V_{CE}=5V Ee=1mW/cm² λ=940νμ	Dark Current max. Ie (nA)@V_{CE}=10V	V_{CE}(SAT) max. Ic=100μA	Vceo Min. @Ic=1mA
	Lens Color	Visable Light Fiber				
LTR-C9303B	Dark	Yes	1.8(Ee=0.5mW/cm²)	100	0.4	30

PTIR (Through Hole & SMD)

SMD PTR

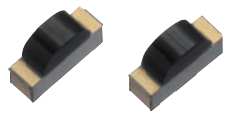

SMD PTR

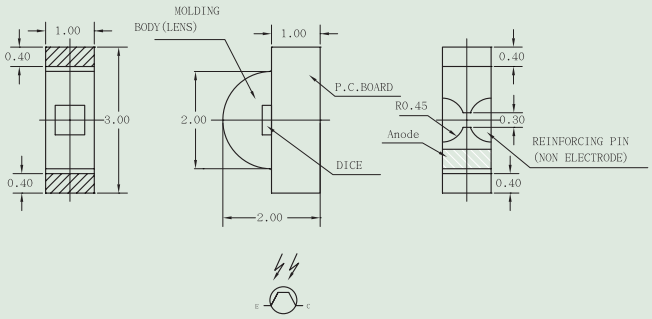

Part No.	Description		Ic(on)min.@V_{CE}=5V Ee=1mW/cm² λ=940νμ	Dark Current max. Ie (nA)@V_{CE}=10V	V_{CE}(SAT) max. Ic=100μA	Vceo Min. @Ic=1mA
	Lens Color	Visable Light Fiber				
LTR-S3203B	Dark	Yes	0.19(Ee=0.5W/cm²)	100	0.4	30

SMD PTD

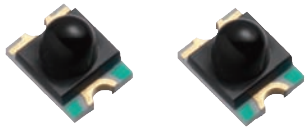

SMD PTD

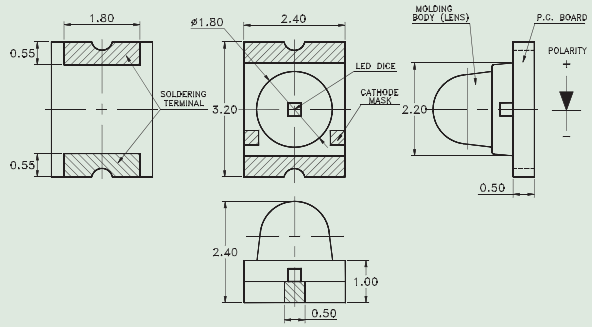

Part No.	Description		Is min.(μA)@V_R=0V Ee=1mW/cm² λp=850nm	Dark Current max. (nA)@V_R=10V	$V_{(BR)R(V)}$ Min. @I_R=100μA Ee=0mW/cm²
	Lens Color	Visable Light Fiber			
LTR-C930DB	Dark	Yes	2	30	30

SMD PTD

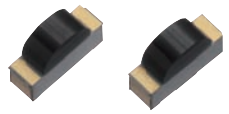

SMD PTD

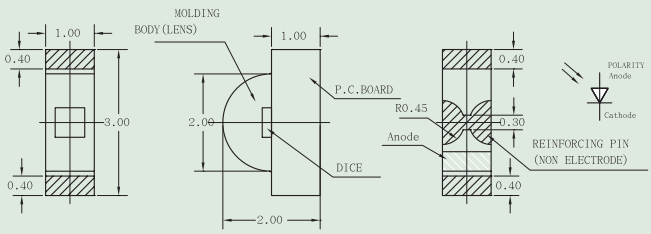

Part No.	Description		Is min.(μA)@V_R=0V Ee=1mW/cm² λp=850nm	Dark Current max. (nA)@V_R=10V	$V_{(BR)R(V)}$ Min. @I_R=100μA Ee=0mW/cm²
	Lens Color	Visable Light Fiber			
LTR-S320C	Dark	Yes	0.2(Ee=0.5W/cm²)	10	30

Application Note

Digital Circuit Interface for Optical Switch

In most of application cases, Optical Switch acts as a sensor or switch in the system; To be a Input for ASIC or Micro Processor in an electrical equipment with intelligent function. Following figure provide a typical circuits for Optical Switch to interface with the ASIC and Micro Processor . (Please refer the product data for specifications on the individual part number for the Ic(on) light current value.)

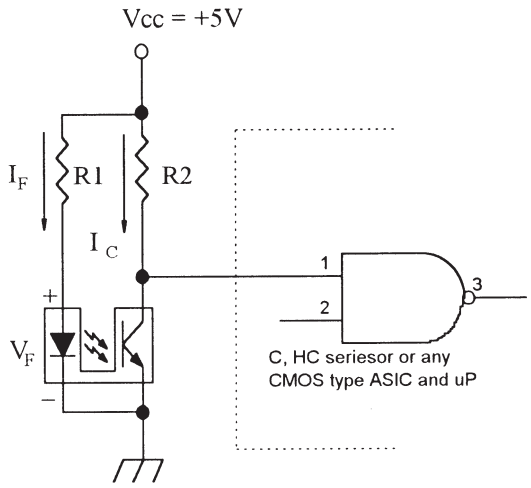

Fig. 1 CMOS series interface circuit

Example calculation for Fig. 1 :

Here choice LTH-301-19 for an example. In most of actual case the outside dimensions is first parameter to be considered to fit the application requirement and the second is Ic(on) light current value. Here break down the calculation into few steps to demonstrate the way to choice suitable R1 and R2 value for the Optical switch with specificed Ic(on) value.

According the specifications of LTH-301-19.

The Ic(on) min is 1.5mA at IF = 20mA, Vce = 5V

I_F = (Vcc - V_F) / R1

= (5V - 1.2V) / R1 ····· (V_F is close to 1.2V at I_F from 10mA to 20mA)

Suggest I_F = 10mA then R1 = (5V - 1.2V) / 10mA, R1 = 380 Ohms

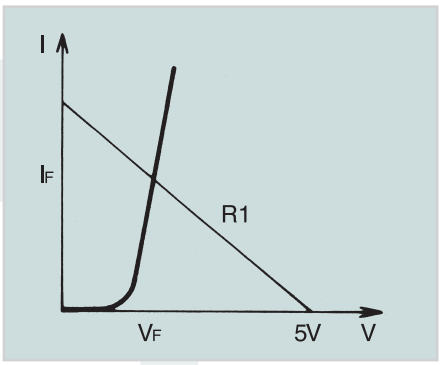

Fig. 2 Forward I-V characteristics of the IR LED

Application Note

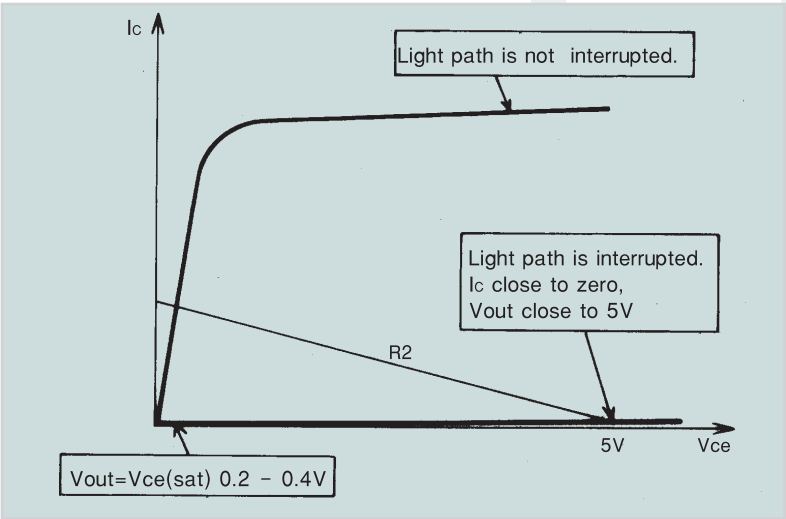

Fig. 3 Phototransister in common-emitter bias

Ic(on)min = 1.5mA at I_F = 20mA, Vce = 5V,

Ic(on)min close to 0.75mA when IF =10mA

(The Input low current and Input high current of CMOS gate are very low and could be neglected)

Then R2(min) = 5V / 0.75mA = 6.7K ohms

When the target object (the object to be detected) does not interrupt the light path (the slot of the optical switch) then phototransister turn on. Consider to make Phototransister into deep saturated area to get a good logic low level and reserve necesssary guard band for whole circuit, the suitable R2 is 2 times of R2(min), so the suitable R2 in above application circuit for LTH-301-19 is 13K. When the target object interrupts the light path, the curent flow in the loop is caused by the two possible reasons, Ambient light and Iceo leakage current of the phototrsister. In the specifications, the leakage current of phototransister is less than 100nA, so the maximum allowable ambient light current in above example could be checked by following way :

1. Assuming the minimun logic high level is 3.2V in Vcc = 5V.
2. Then the maximun total current flow for logic high = (5V- 3.2V) / 13K Ohms

   =1.8V / 13K Ohms

   =138.5uA
3. So the maximum allowable ambient light current = 138.5uA - 0.1uA

   = 138.4uA

Because the housing of the optical switch is opaque type, the ambient light only can vie the slit in front of the phototransister to cause ambient light current and it is really unusual to get such high ambient light current in a normal application condition. The object to be detected can not cut the light from the emitter completely is the another possible reason to make unexpected current flow in the phototransister when the objet interrupts the slot. Due to this reason there is partial light pass through the object and cause unexpect current in the phototransister and if it is high enough to make wrong logic level then it is necessary to consider another suitable material for the detected object.

Result of the example : The suitable R1 and R2 value for LTH-301-19in above application ciucuit are, R1 = 380 Ohms, R2 = 13K Ohms

Application Note

Optical Switch Application Circuit Collection

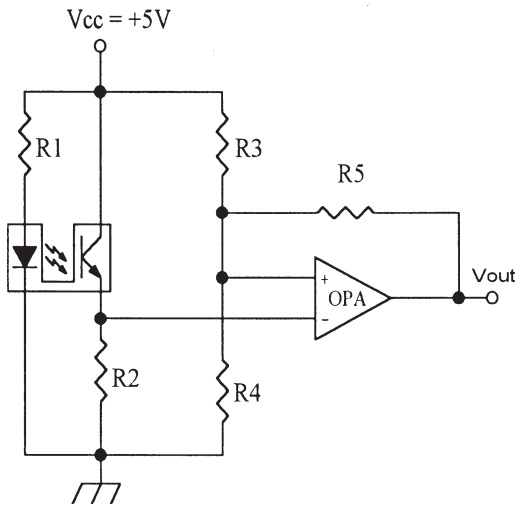

Fig. 3 Circuit with voltage comparator

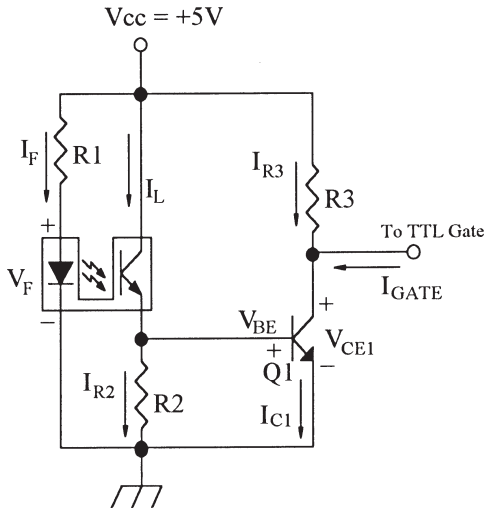

Fig. 4 Circuit with a additional transistor

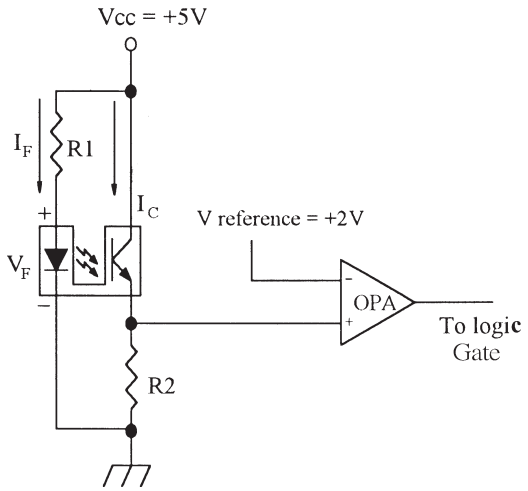

Fig. 5 Circuit with operation amplifier

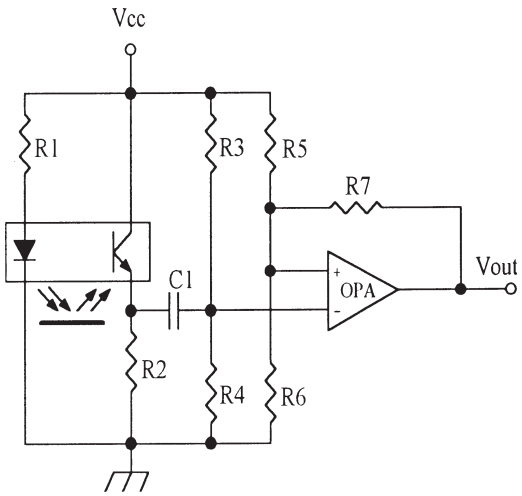

Fig. 6 Circuit with OPA AC coupling

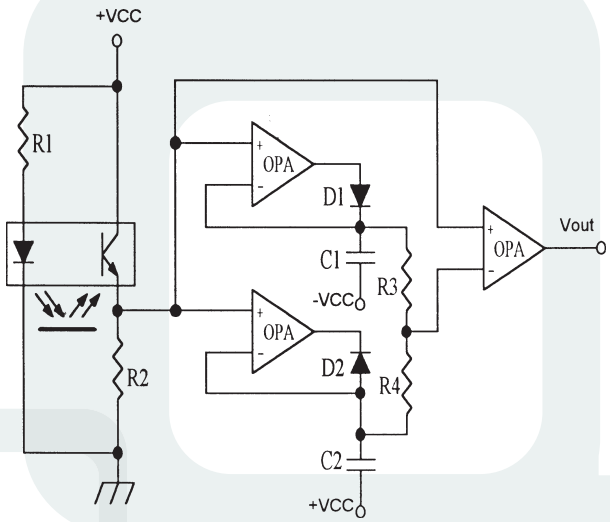

Fig. 7 Circuit with floating comparator

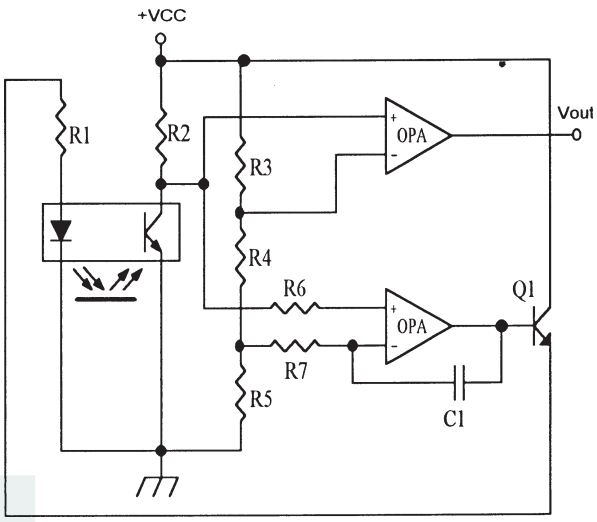

Fig. 8 Circuit with emitting light compensation

Application Note

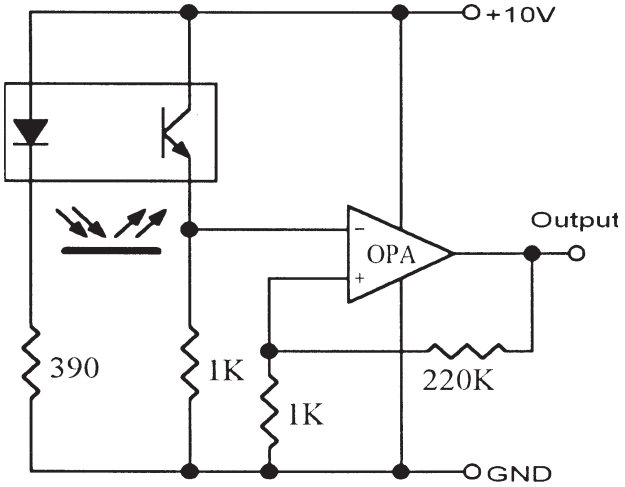

Fig. 9 Circuit with operation amplifier

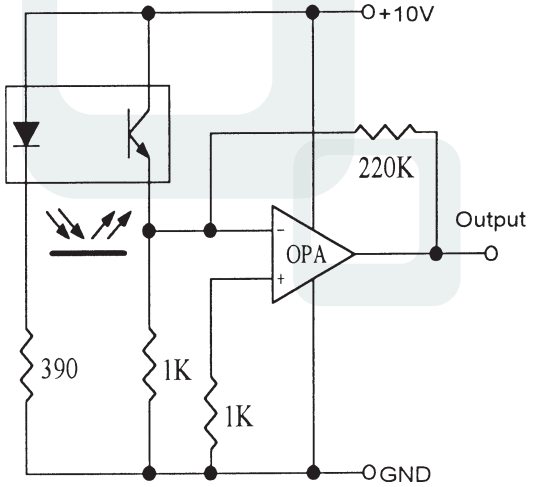

Fig. 10 Circuit with operation amplifier

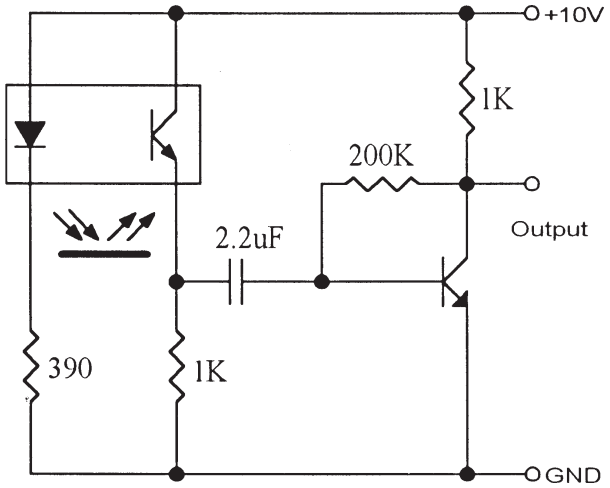

Fig. 11 Circuit with transistor amplifier

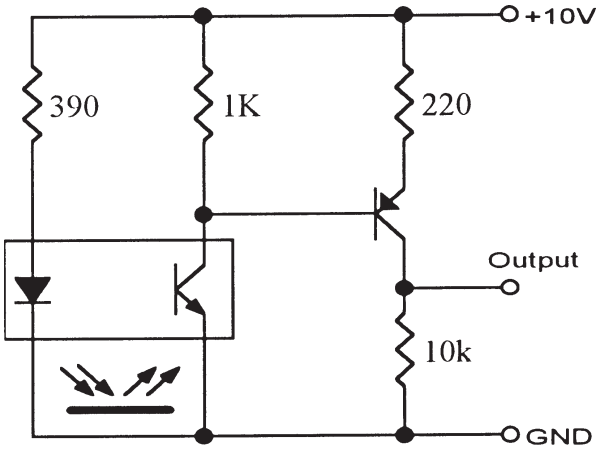

Fig. 12 Circuit with transistor amplifier

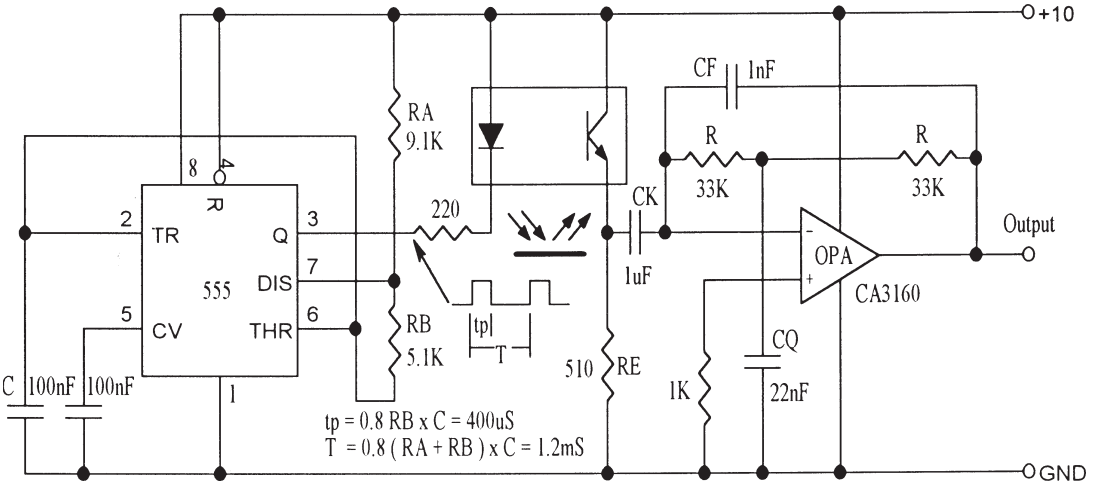

Fig. 13 Circuit with AC coupling and oscillating to suppress the ambient light

Application Note

Fig. 2 shows a typical circuits with TTL logic gate, when use a standard TTL gate the input current IIL and IIH of the standard type TTL gate is relative high and may impact the output voltage level of optical switch, it may be necessary to add a additional transistor or OPA to increase the output capability of the optical switch especial for the low Ic(on) type of optical switch.

Fig. 3 shows a circuit with voltage comparator when a precise trigger level is required, the trigger level also can be adjustable by a trimmport to fit various sensitivity optical switches in the same system.

Fig. 4 shows a circuit with a additional transistor as amplifier to increase the detecting sensitivity or keep same sensitivity but reduce the emitter drive current to save power and increase the life of the sensor or increase the output drive capability, an operation amplifier also can be used to reach same purpose, especially for the reflective type , the active signal Ic(on) of reflective type optical switches is relative small, in most of cases it may only few uA, so an additional amplifier is necessary to be added at the output of the sensor , for example the circuits of Fig. 5, 9, 10, 11 and Fig. 12.

In some applications, the environment condition such as high ambient light and optical switch be operated in a open frame space, they may make low S/N (signal / noise ratio) to optical switches, for these cases an AC signal processing circuit is necessary to eliminate the noise, increase the S/N ratio and make the system more reliable.

Fig. 6 is a AC coupling circuit with fixed trigger level, Fig. 7 shows the circut with floating comparison level,

Fig. 8 is an example circuit with auto light level compensation for emitter to keep the light output level of emitter in constant.

Fig. 13 is a simple example to operate the reflective type optical switches with chopped light (modulation), it uses a pulse generator constructed with a timer IC and a operation amplifier as a band pass filter for the purpose to suppress the ambient light and increase the S/N ratio.

Encoder

Lite-On's optical encoders are used in variety of applications where position & velocity sensing are required in a motion control system. They are ranging from the most cost effective price performance encoders to the very high end high resolution industrial encoders. Lite-On also offers designers the flexibility to build custom encoder assemblies that require a unique housing.

In today's global market place, Lite-On is there to provide the products that enable new innovations in office automation, medical equipment, & motor applications.

D11 Series

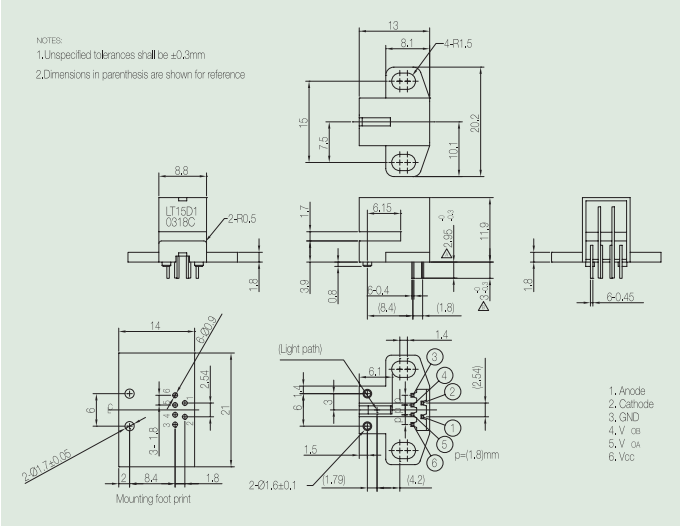

Part No.	Features	Resolution (LPI)	Application Voltage (V)	Duty Cycle (%)	Phase Difference	Max. Frequency (KHz)
LTOE-15D11	Transmissive Digital Encoder	150	2.7-5.5	50±10	90±30	50

D21 Series

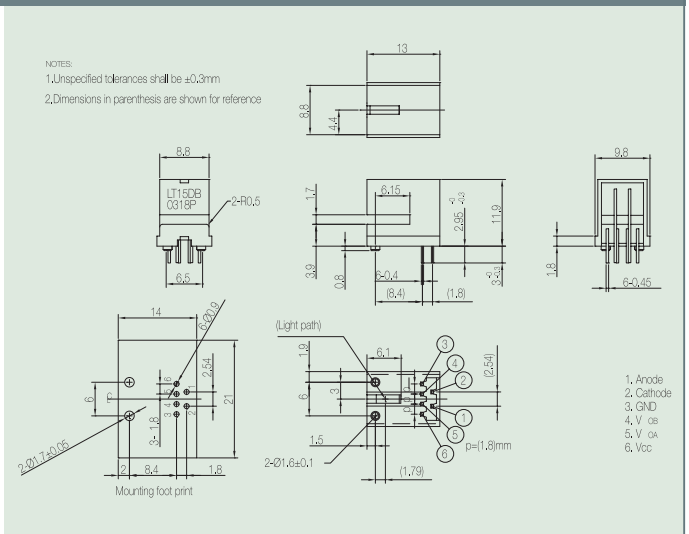

Part No.	Features	Resolution (LPI)	Application Voltage (V)	Duty Cycle (%)	Phase Difference	Max. Frequency (KHz)
LTOE-15D21	Transmissive Digital Encoder	150	2.7-5.5	50±10	90±30	50

Encoder

DB1 Series

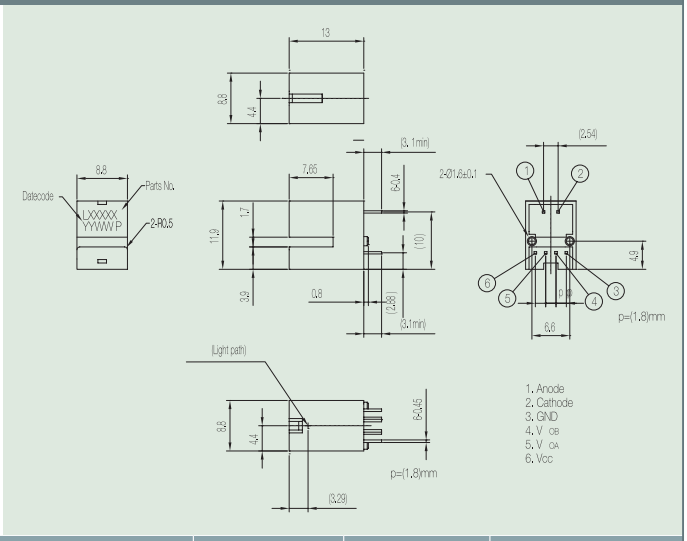

Part No.	Features	Resolution (LPI)	Application Voltage (V)	Duty Cycle (%)	Phase Difference	Max. Frequency (KHz)
LTOE-15DB1	Transmissive Digital Encoder	150	2.7-5.5	50±10	90±30	50

DC1 Series

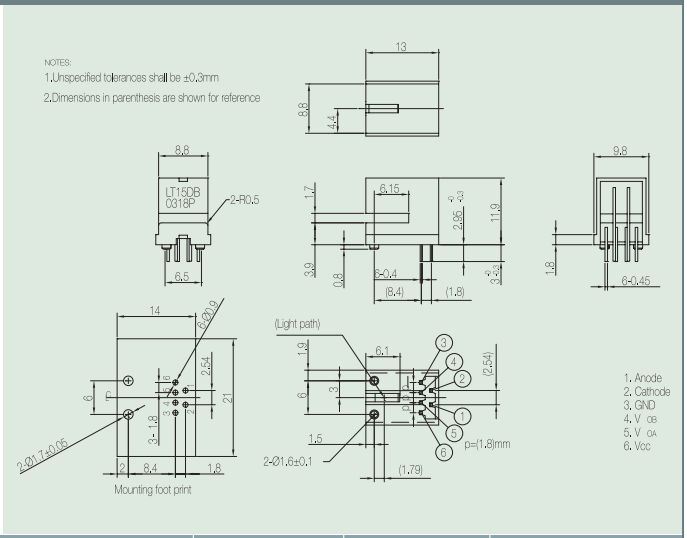

Part No.	Features	Resolution (LPI)	Application Voltage (V)	Duty Cycle (%)	Phase Difference	Max. Frequency (KHz)
LTOE-30DC1	Transmissive Digital Encoder	300	2.7-5.5	50±10	90±30	50

D71 Series

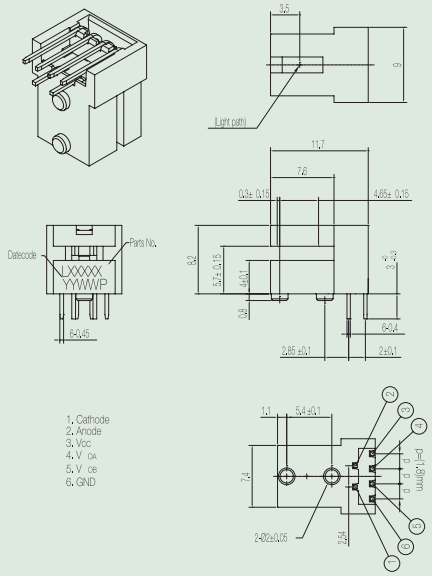

Part No.	Features	Resolution (LPI)	Application Voltage (V)	Duty Cycle (%)	Phase Difference	Max. Frequency (KHz)
LTOE-15D71	Transmissive Digital Encoder	150	2.7-5.5	50±10	90±30	50
LTOE-30D71	Transmissive Digital Encoder	300	2.7-5.5	50±10	90±30	50

Photo Link

PhotoLink : Digital Audio Signal Transmission by Plastic Optical Fiber.

Plastic Optical Fiber, abbreviated POF, typically uses PMMA (acrylic), a general purpose resin as the core material, and fluorinated polymers for the clad material. In large-diameter fibers, 96% of the cross section is the core that allows the transmission of light. POF had been called the “consumer” optical fiber, It has fiber diameter of 1000 μm, with a core diameter of 980μm.

POF has been used for transmission due to the fact that costs of POF, associated optical links, connectors and installation costs are low.

Photo Link

Construction of Photolink (Transmitter and Receiver)

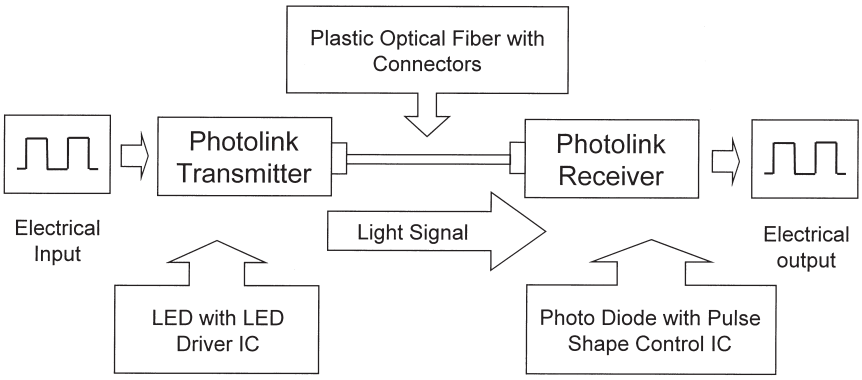

Photolink Transmitter (TA/TX)

- Constructed by **red-light LED** and **LED driver**
- Converting electrical signal into optical one
- Transmitting optical signal into optical fiber

Photolink Receiver (RA/RX)

- Constructed by **photo diode** and **pulse shape control IC**
- Receiving the optical signal from optical fiber
- Converting optical signal into electrical one

Photolink Product Family

	Component	Component + Housing = Connector
Photolink Transmitter (TA/TX)	Transmitter Component LTDL-TA12A LTDL-TA12B	Transmitter Connector LTDL-TX12P series (Cap Housing) LTDL-TX12S series (Shutter Housing)
Photolink Receiver (RA/RX)	Receiver Component LTDL-RA12A LTDL-RA12B	Receiver Connector LTDL-RX16P series (Cap Housing) LTDL-RX16S series (Shutter Housing)
Customers	Connector Marks	Consumer Field DVD Player, DVR, MD (Mini Disk), Stereo System, Game Console, STB (Set-Top Box) Consumer Field Mother Board, NB, Sound Card

Photo Link

Photolink Module

Transmitter
Receiver
Component

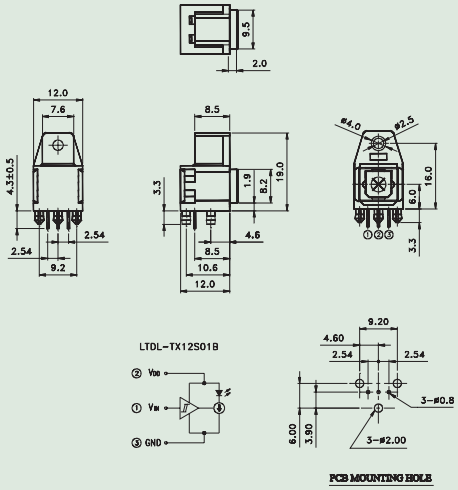

Part No.	Description			
	Electrical Optical Characteristics	Application	Dimension (WxHxD)mm	Remark
LTDL-TX12S01B	refer to LTDL-TA12B	DVD, Stereo System STB, Desktops	12.0x19.0x12.0	Shutter Type Connector
LTDL-RX16S01B	refer to LTDL-RA12A	DVD, Stereo System STB, Desktops	12.0x19.0x12.0	Shutter Type Connector

Photolink Module

Transmitter
Receiver
Component

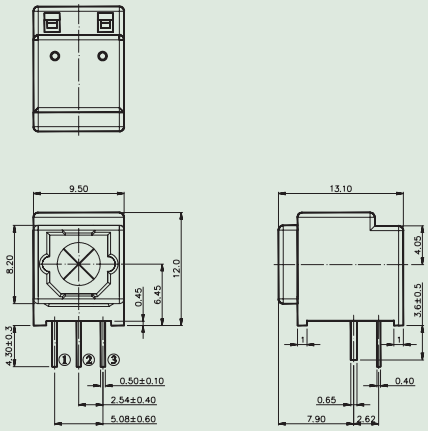

Part No.	Description			
	Electrical Optical Characteristics	Application	Dimension (WxHxD)mm	Remark
LTDL-TX12S05	refer to LTDL-TA12B	NB, Sound Card Portable AV Devices	9.5x12.0x13.1	Shutter Type Connector
LTDL-RX16S05	refer to LTDL-RA12A	NB, Sound Card Portable AV Devices	9.5x12.0x13.1	Shutter Type Connector

Photolink Module

Transmitter
Receiver
Component

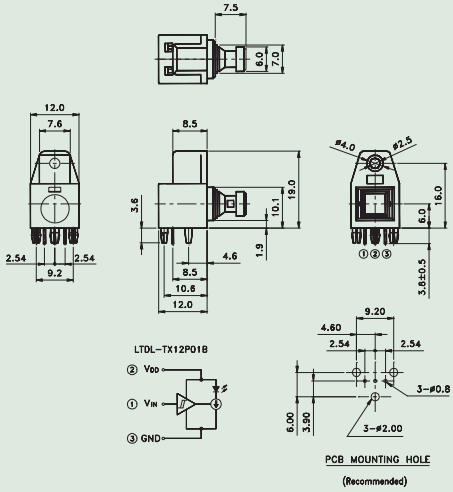

Part No.	Description			
	Electrical Optical Characteristics	Application	Dimension (WxHxD)mm	Remark
LTDL-TX12P01B	refer to LTDL-TA12B	DVD, Stereo System STB, Desktops	12.0x19.0x12.0	Cap Type Connector Compatible with Sharp
LTDL-RX16P01B	refer to LTDL-RA12B	DVD, Stereo System STB, Desktops	12.0x19.0x12.0	Cap Type Connector Compatible with Sharp

Photolink Module

Transmitter
Receiver
Component

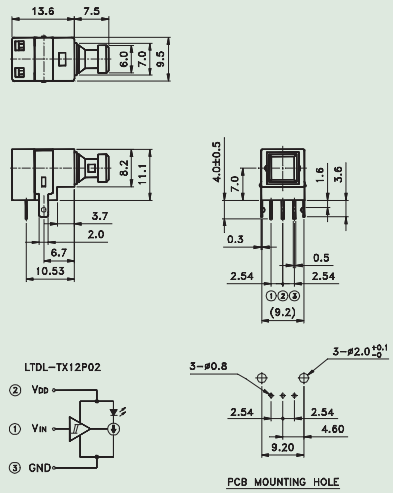

Part No.	Description			
	Electrical Optical Characteristics	Application	Dimension (WxHxD)mm	Remark
LTDL-TX12P02	refer to LTDL-TA12B	NB, Sound Card Portable AV Devices	9.2x11.1x13.6	Cap Type Connector Compatible with Sharp
LTDL-RX16P02	refer to LTDL-RA12A	NB, Sound Card Portable AV Devices	9.2x11.1x13.6	Cap Type Connector Compatible with Sharp

Photo Link

Photolink Module

Transmitter
Receiver
Component

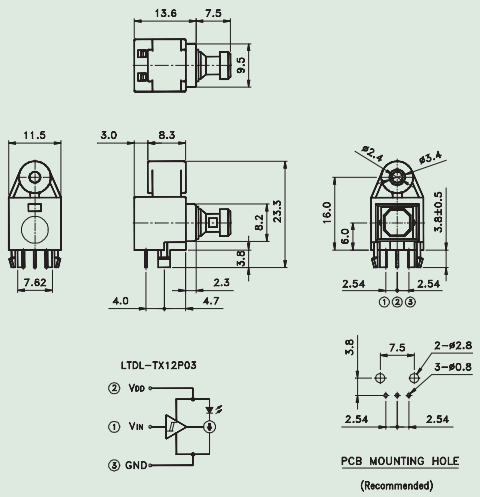

Part No.	Description			
	Electrical Optical Characteristics	Application	Dimension (WxHxD)mm	Remark
LTDL-TX12P03	refer to LTDL-TA12B	DVD, Stereo System STB, Desktops	11.5x19.5x13.6	Cap Type Connector Compatible with Toshiba
LTDL-RX16P03	refer to LTDL-RA12B	DVD, Stereo System STB, Desktops	11.5x19.5x13.6	Cap Type Connector Compatible with Toshiba

Photolink Module

Transmitter
Receiver
Component

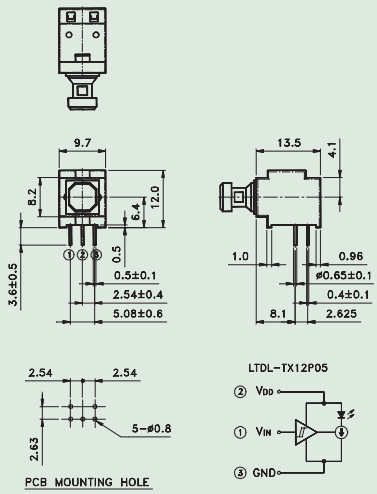

Part No.	Description			
	Electrical Optical Characteristics	Application	Dimension (WxHxD)mm	Remark
LTDL-TX12P05	refer to LTDL-TA12B	NB, Sound Card Portable AV Devices	9.7x12.0x13.5	Cap Type Connector Compatible with Toshiba
LTDL-TX16P05	refer to LTDL-RA12A	NB, Sound Card Portable AV Devices	9.7x12.0x13.5	Cap Type Connector Compatible with Toshiba

Photolink Transmitter Component

Transmitter Component

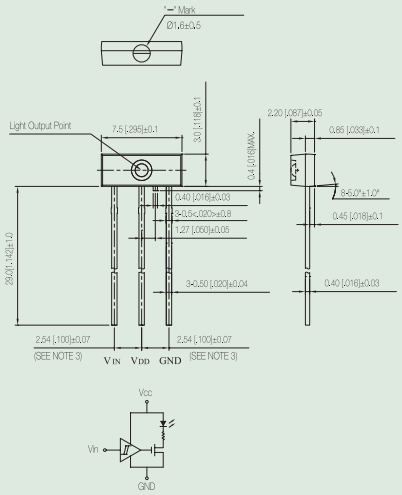

Part No.	Description			Propagation Delay Time		Dissipation Current I_{DD} (mA)Max.	Pulse Width Distortion Δ t_W(ns)	Pin Thickness (mm)
	Supply Voltage (V)	Transmission Speed(Mbps)	Coupling Light Output(dBm)	t_{PLH}(ns) Max.	t_{PHL}(ns) Max.			
LTDL-TA12A	2.75 ~ 5.25	13.2	-21 ~ -15	166	155	8	±18	0.4
LTDL-TA12B	2.75 ~ 5.25	13.2	-21 ~ -15	166	155	8	±18	0.4
LTDL-TA16A	2.75 ~ 5.25	16	-21 ~ -15	100	100	11	±15	0.4
LTDL-TA50A	2.75 ~ 5.25	50	-21 ~ -15	80	80	11	±10	0.4

Photolink Transmitter Component

Transmitter Component

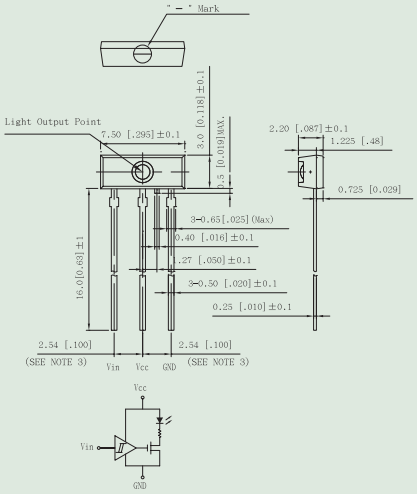

Part No.	Description			Propagation Delay Time		Dissipation Current I_{DD} (mA)Max.	Pulse Width Distortion Δ t_W(ns)	Pin Thickness (mm)
	Supply Voltage (V)	Transmission Speed(Mbps)	Coupling Light Output(dBm)	t_{PLH}(ns) Max.	t_{PHL}(ns) Max.			
LTDL-TA16A-T	2.75 ~ 5.25	16	-21 ~ -15	100	100	11	±15	0.25

Photo Link

Photolink Receiver Component

Receiver Component

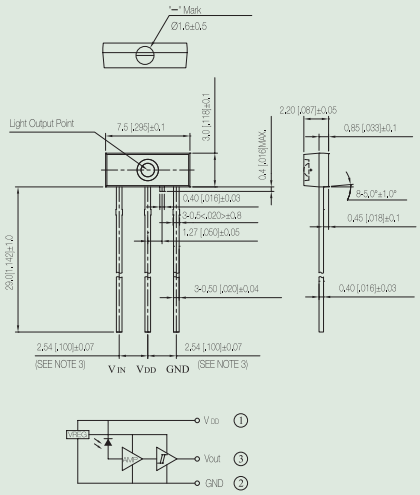

Part No.	Description			Propagation Delay Time		Dissipation Current I_{DD} (mA)Max.	Pulse Width Distortion Δt_W(ns)	Pin Thickness (mm)
	Supply Voltage (V)	Transmission Speed(Mbps)	Coupling Light Output(dBm)	t_{PLH}(ns) Max.	t_{PHL}(ns) Max.			
LTDL-RA12A	4.75 ~ 5.25	13.2	-24 ~ -14	100	100	6	±25	0.4
LTDL-RA12B	2.40 ~ 3.60	13.2	-24 ~ -14	166	155	6	±25	0.4
LTDL-RA16A	2.75 ~ 5.25	16	-21 ~ -15	100	100	6	±25	0.4

Photolink Receiver Component

Receiver Component

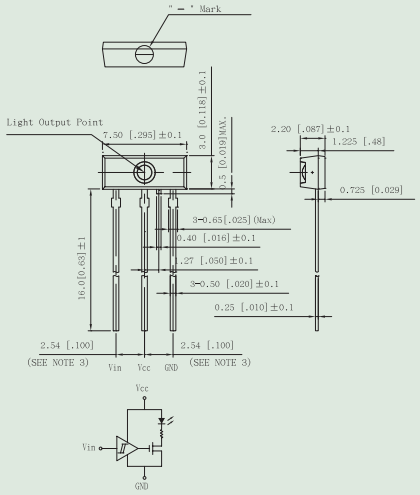

Part No.	Description			Propagation Delay Time		Dissipation Current I_{DD} (mA)Max.	Pulse Width Distortion Δt_W(ns)	Pin Thickness (mm)
	Supply Voltage (V)	Transmission Speed(Mbps)	Coupling Light Output(dBm)	t_{PLH}(ns) Max.	t_{PHL}(ns) Max.			
LTDL-RA16A-T	2.75 ~ 5.25	16	-21 ~ -15	100	100	6	±25	0.25

Note:The difference between LTDL-TAxxA vs LTDL-TA12B

V_{DD}	V_{in}	LTDL-TAxxA LED Signal	LTDL-TA12B LED Signal
2.75V ~ 5.25V	High	ON	ON
	Low	OFF	OFF
	Floating	OFF	ON/OFF
Floating	High	OFF	ON
	Low	OFF	OFF

Photointerrupter

Lite-On Photointerrupters include slotted, reflective and actuator type with connectors. These optical switches consisting of infrared emitters and photo detectors which are most suited to be used in applications such as printer, scanner, copy machine, facsimile machine and vending machines. Our highly reliable, accurate and customized devices will fulfill specific customers' sensor requirements. Lite-On's skilled team of specialists and engineering expertise is ready to offer fast support for the requirements of customer-made parts and co-development with customers.

Photointerrupter

Transmissive Type (Slotted Type)

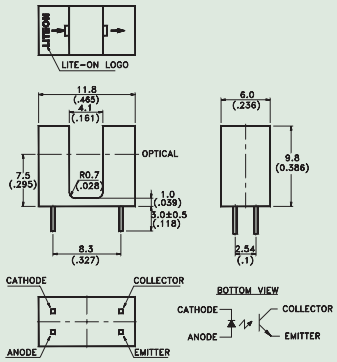

Part No.	Features	Lead Distance (mm)	Emitting and Detecting GaP (mm)	I_C Min. @ I_F=20mA /V_{CE}=5V (μA)
LTH-301-27P1	Phototransistor output, PCB mounting type	8.3	4.1	500

Transmissive Type (Slotted Type)

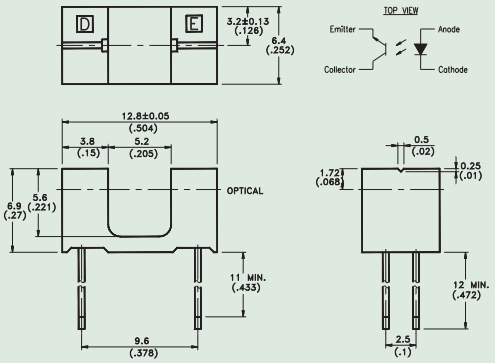

Part No.	Features	Lead Distance (mm)	Emitting and Detecting GaP (mm)	I_C Min. @ I_F=20mA /V_{CE}=5V (μA)
LTH-301A	Phototransistor output, PCB mounting type	9.6	5.2	500

Transmissive Type (Slotted Type)

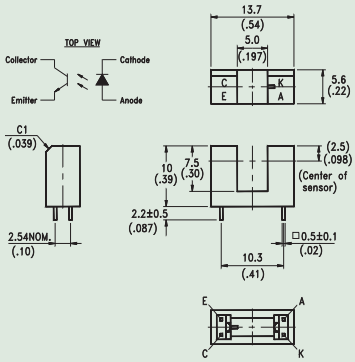

Part No.	Features	Lead Distance (mm)	Emitting and Detecting GaP (mm)	I_C Min. @ I_F=20mA /V_{CE}=5V (μA)
LTH-301-23	Phototransistor output, PCB mounting type, With Positioning Pin	10.3	5.0	500

Photointerrupter

Transmissive Type (Slotted Type)

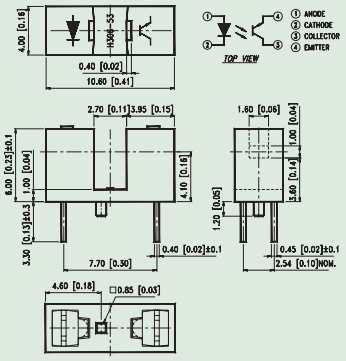

Part No.	Features	Lead Distance (mm)	Emitting and Detecting GaP (mm)	I_C Min. @ I_F=20mA /V_{CE}=5V (μA)
LTH-306-53P1	Phototransistor output, PCB mounting type, With Positioning Pin	7.7	2.7	1200

Transmissive Type (Slotted Type)

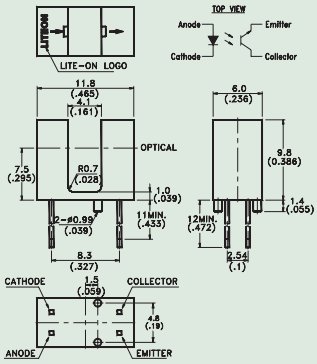

Part No.	Features	Lead Distance (mm)	Emitting and Detecting GaP (mm)	I_C Min. @ I_F=20mA /V_{CE}=5V (μA)
LTH-301-19	Phototransistor output, PCB mounting type, With positioning pin	8.3	4.1	500

Transmissive Type (Slotted Type)

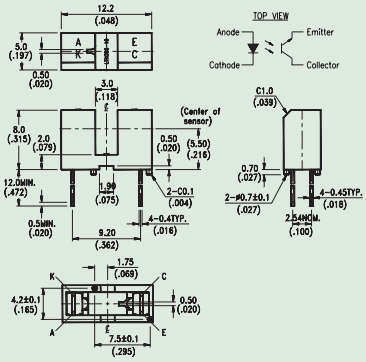

Part No.	Features	Lead Distance (mm)	Emitting and Detecting GaP (mm)	I_C Min. @ I_F=20mA /V_{CE}=5V (μA)
LTH-306-10	Phototransistor output, PCB mounting type, With positioning pin	9.2	3.0	500

Transmissive Type (Slotted Type)

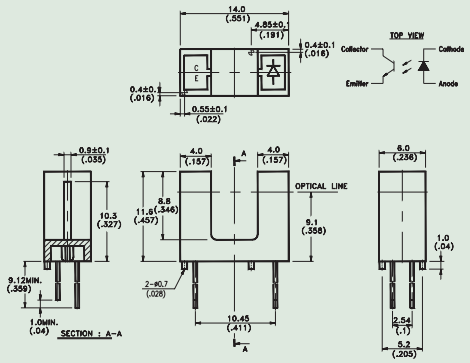

Part No.	Features	Lead Distance (mm)	Emitting and Detecting GaP (mm)	I_C Min. @ I_F=20mA /V_{CE}=5V (μA)
LTH-301-05	Phototransistor output, PCB mounting type, With positioning pin	10.45	6.0	500

Transmissive Type (Slotted Type)

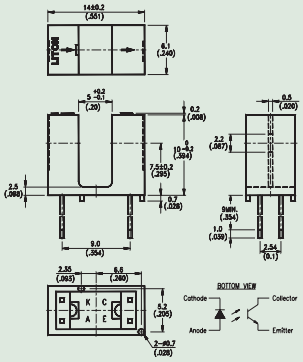

Part No.	Features	Lead Distance (mm)	Emitting and Detecting GaP (mm)	I_C Min. @ I_F=20mA /V_{CE}=5V (μA)
LTH-301-07	Phototransistor output, PCB mounting type, With positioning pin	9.0	5.0	500

Transmissive Type (Slotted Type)

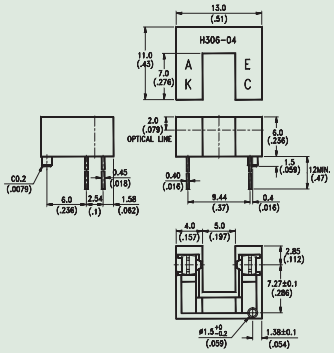

Part No.	Features	Lead Distance (mm)	Emitting and Detecting GaP (mm)	I_C Min. @ I_F=20mA /V_{CE}=5V (μA)
LTH-306-04	Phototransistor output, PCB mounting type, With positioning pin	9.44	5.0	500

Photointerrupter

Transmissive Type (Slotted Type)

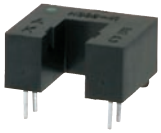

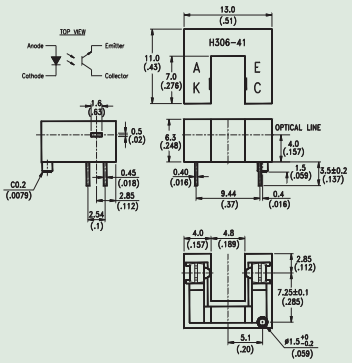

Part No.	Features	Lead Distance (mm)	Emitting and Detecting GaP (mm)	I_C Min. @ I_F=20mA /V_{CE}=5V (μA)
LTH-306-41P1	Phototransistor output, PCB mounting type, With positioning pin, Horizontal slit	9.44	4.8	500

Transmissive Type (Slotted Type)

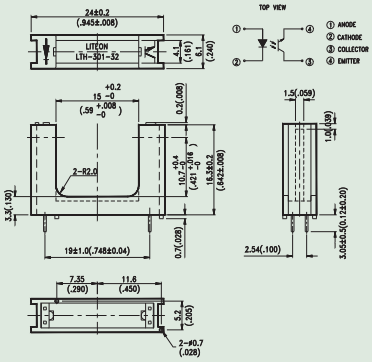

Part No.	Features	Lead Distance (mm)	Emitting and Detecting GaP (mm)	I_C Min. @ I_F=20mA /V_{CE}=5V (μA)
LTH-301-32	Phototransistor output, PCB mounting type, With positioning pin, Wide gap	19.0	15.0	400

Transmissive Type (Slotted Type)

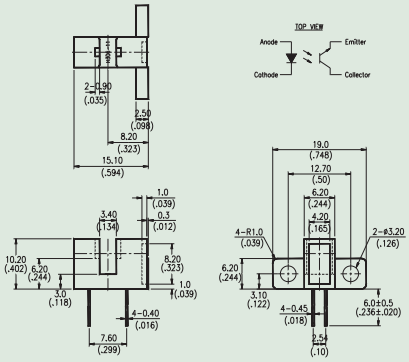

Part No.	Features	Lead Distance (mm)	Emitting and Detecting GaP (mm)	I_C Min. @ I_F=20mA /V_{CE}=5V (μA)
LTH-306-11	Phototransistor output, Both PCB and screw mounting type	7.6	3.4	500

Transmissive Type (Slotted Type)

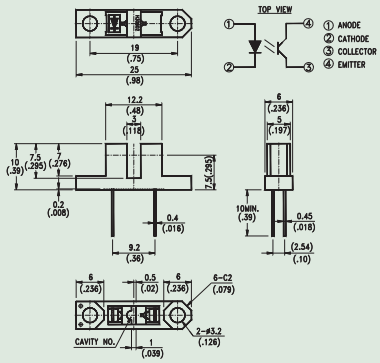

Part No.	Features	Lead Distance (mm)	Emitting and Detecting GaP (mm)	I_C Min. @ I_F=20mA /V_{CE}=5V (μA)
LTH-306-02	Phototransistor output, Both PCB and screw mounting type	9.2	3.0	500

Transmissive Type (Slotted Type)

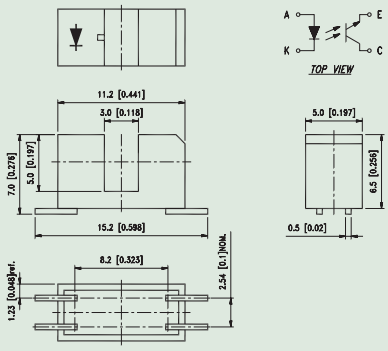

Part No.	Features	Lead Distance (mm)	Emitting and Detecting GaP (mm)	I_C Min. @ I_F=20mA /V_{CE}=5V (μA)
LTH-306-35	Lead bends for surface mount	-	3.0	500

Transmissive Type (Slotted Type)

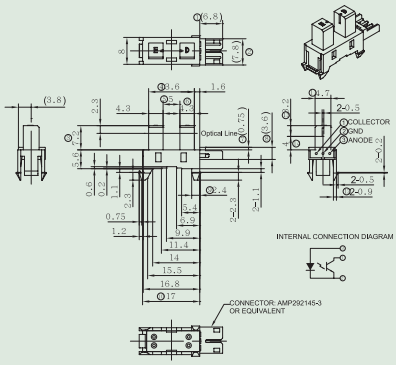

Part No.	Features	Lead Distance (mm)	Emitting and Detecting GaP (mm)	I_C Min. @ I_F=20mA /V_{CE}=5V (μA)
LTH-306-64	Snapin mounting with a built-in connector	4.7	5.0	500

Actuator Type (Transmissive Type with Flag)

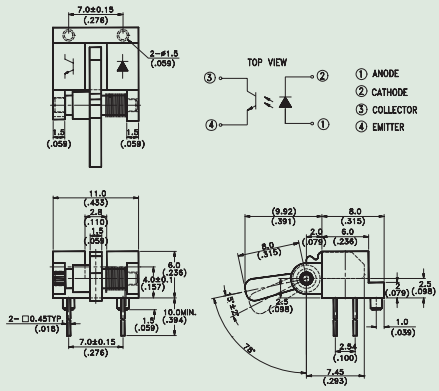

Part No.	Features	Aciton Angle	Lead Distance (mm)	Wire Length (mm)	I_C Min. @ I_F=20mA /V_{CE}=5V (μA)
LTH-306-09P1	With Flag, Phototransistor output, PCB mounting type	15 ± 2°	7	-	500

Actuator Type (Transmissive Type with Flag)

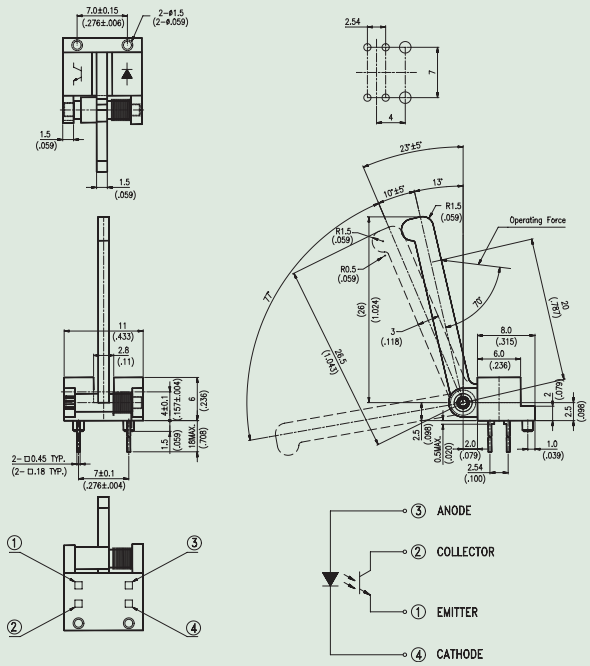

Part No.	Features	Aciton Angle	Lead Distance (mm)	Wire Length (mm)	I_C Min. @ I_F=20mA /V_{CE}=5V (μA)
LTH-306-49	With Flag, Phototransistor output, PCB mounting type	10 ± 5°	7	-	500

Actuator Type (Transmissive Type with Flag)

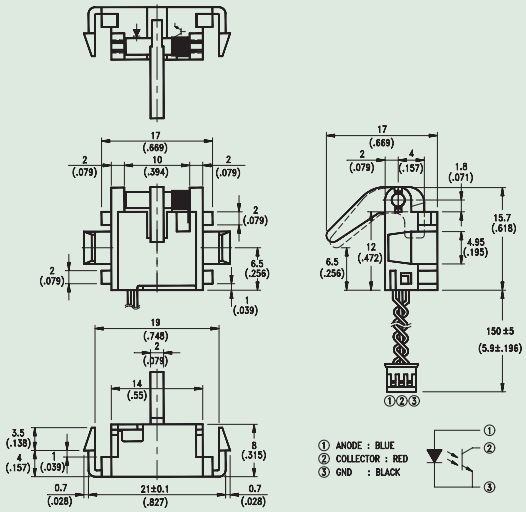

Part No.	Features	Aciton Angle	Lead Distance (mm)	Wire Length (mm)	I_C Min. @ I_F=20mA /V_{CE}=5V (μA)
LTH-306-03W47	With Flag, wire and connector, Phototransistor output, Snapin mounting	11 ± 3°	-	150 ± 5	500

Actuator Type (Transmissive Type with Flag)

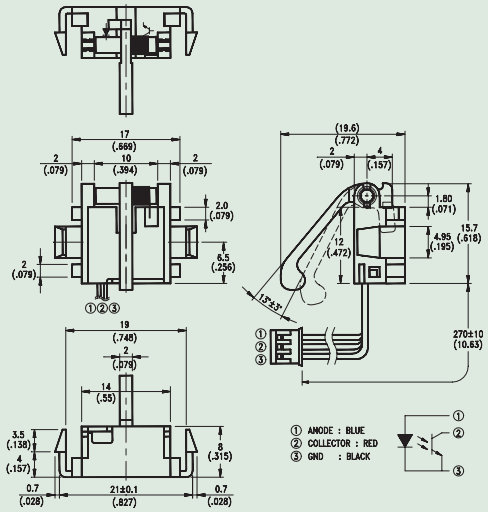

Part No.	Features	Aciton Angle	Lead Distance (mm)	Wire Length (mm)	I_C Min. @ I_F=20mA /V_{CE}=5V (μA)
LTH-306-06W1	With Flag, wire and connector, Phototransistor output, Snapin mounting	8 ± 3°	-	270 ± 10	500

Photointerrupter

Actuator Type (Transmissive Type with Flag)

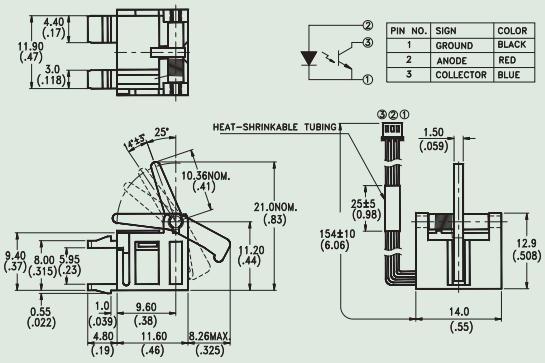

Part No.	Features	Aciton Angle	Lead Distance (mm)	Wire Length (mm)	I_C Min. @ I_F=20mA /V_{CE}=5V (μA)
LTH-301-25W4	With Flag, wire and connector, Phototransistor output, Snapin mounting	14 ± 3°	-	154 ± 10	500

Reflective Type

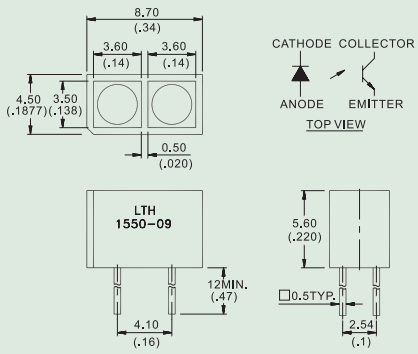

Part No.	Features	Focal Distance (mm)	I_C Min. @ I_F=20mA /V_{CE}=5V (μA)	Lead Distance (mm)
LTH-1550-09	Phototransistor output, PCB mounting	3.5	200	4.1

Reflective Type

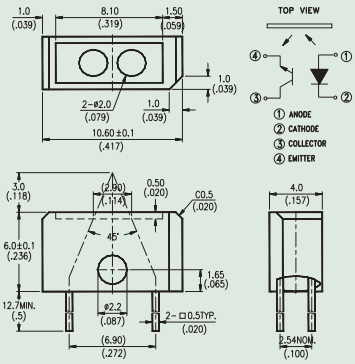

Part No.	Features	Focal Distance (mm)	I_C Min. @ I_F=20mA /V_{CE}=5V (μA)	Lead Distance (mm)
LTH-1650-01	Phototransistor output, PCB mounting	3.0	100	6.9

Reflective Type

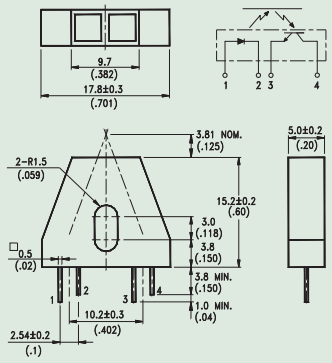

Part No.	Features	Focal Distance (mm)	I_C Min. @ I_F=20mA /V_{CE}=5V (μA)	Lead Distance (mm)
LTH-209-01	Phototransistor output, PCB mounting	3.8	160	10.2

Reflective Type

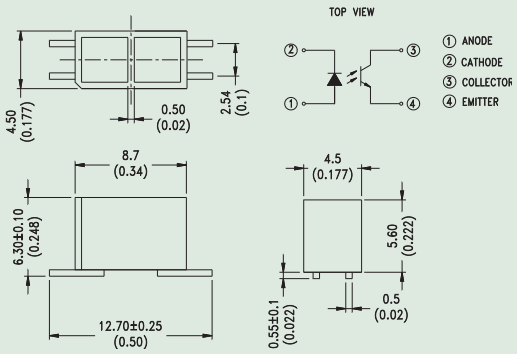

Part No.	Features	Focal Distance (mm)	I_C Min. @ I_F=20mA /V_{CE}=5V (μA)	Lead Distance (mm)
LTH-1550-06	Lead bends for surface mount	3.5	200	-

Photocoupler

Lite-On photocouplers are available in standard single, dual, and quad channels DIP packages, SMD or mini flat packages with Transistor., Triac, High Speed, MOSFET Relay or Darlington output and AC input configurations to serve various applications such as switch mode power, battery charger, fax modem, home appliances, telecommunication and industry controller. The new mini flat package photocouplers with 2.0mm thickness are only available in tape and reel configurations. All photocouplers employ double transfer mold technology which features high isolation voltage with safety approval certificates including CQC, UL, CSA, BSI, VDE, FIMKO, NEMKO, DEMKO and SEMKO.

With Liteon integrates environmental friendly value into every aspect of our design and manufacturing, we offer lead free photocouplers for DIP and mini flat packages and it were RoHS compliance since 2004. To further enhance our step into the green value, we are offering Halogen Free Solutions since Feb 2008 as Worldwide leading Halogen Free photocouplers.

4-Pin Mini Flat Photocoupler

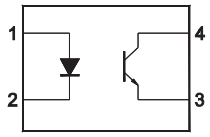

Mini Flat General

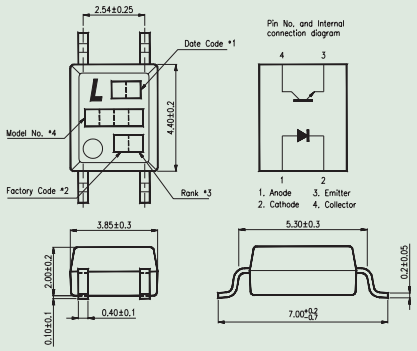

Part No.	Feature	Viso(Vrms)	Vceo(V)	CTR		
				Min.(%)	Max.(%)	I_F(mA)
LTV-356T	DC Input, High Vceo Transistor output	3750	80	50	600	5
LTV-357T	DC Input, Transistor output	3750	35	50	600	5

4-Pin Mini Flat Photocoupler

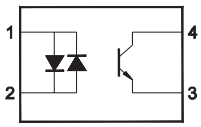

Mini Flat General

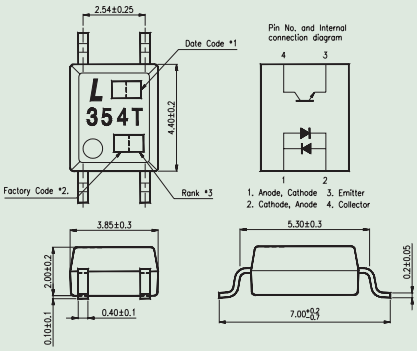

Part No.	Feature	Viso(Vrms)	Vceo(V)	CTR		
				Min.(%)	Max.(%)	I_F(mA)
LTV-354T	AC Input, Transistor output	3750	35	20	400	±1

4-Pin Mini Flat Photocoupler

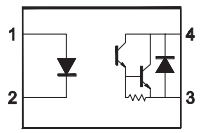

Mini Flat General

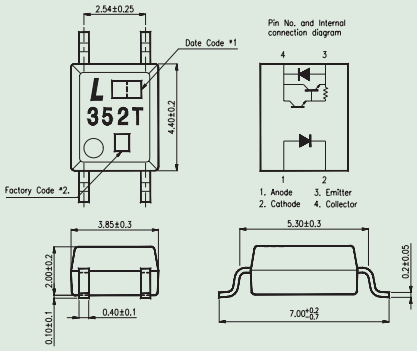

Part No.	Feature	Viso(Vrms)	Vceo(V)	CTR		
				Min.(%)	Max.(%)	I_F(mA)
LTV-352T	DC Input, High Vceo Darlington output	3750	300	1000	–	1

4-Pin Mini Flat Photocoupler

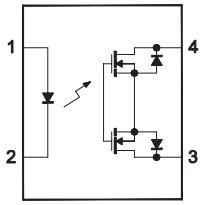

Mini Flat PhotoMosRelay

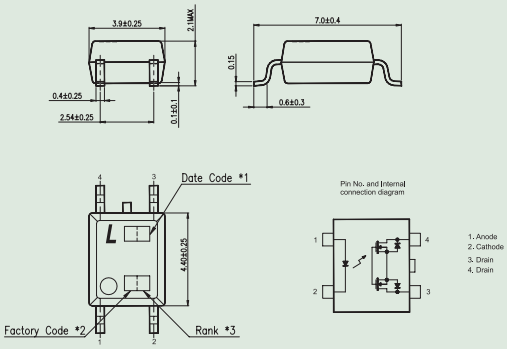

Part No.	Feature	Isolation Voltage BVs(V)	Off-State Output Terminal Voltage Voff(V)	On-State Current Ion(mA)	On-Statereistence (Ion=400mA,IF=5mA) Ron(Ω) Max
LTV-172A	PhotoMosRelay output	1500	60	400	2
LTV-172G	PhotoMosRelay output	1500	60	400	2

4-Pin Mini Flat Photocoupler

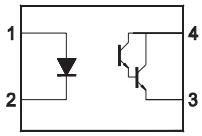

Mini Flat General

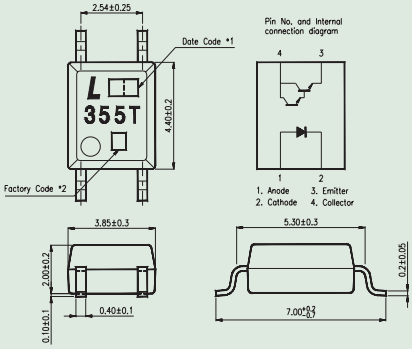

Part No.	Feature	Viso(Vrms)	Vceo(V)	CTR		
				Min.(%)	Max.(%)	IF(mA)
LTV-355T	DC Input, Darlington output	3750	35	600	–	1

4-Pin DIP Photocoupler

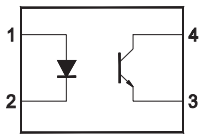

4Pin

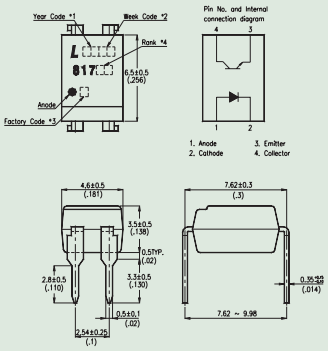

Part No.	Feature	Viso(Vrms)	Vceo(V)	CTR		
				Min.(%)	Max.(%)	IF(mA)
LTV-817	DC Input, Transistor output	5000	35	50	600	5

4-Pin DIP Photocoupler

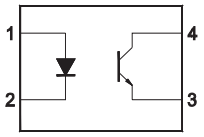

4Pin

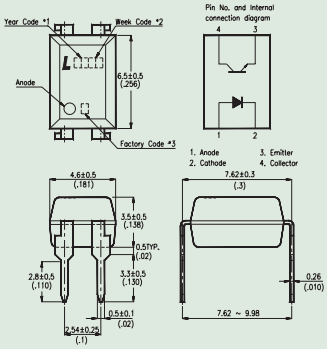

Part No.	Feature	Viso(Vrms)	Vceo(V)	CTR		
				Min.(%)	Max.(%)	IF(mA)
LTV-123	DC Input, High Vceo Transistor output	5000	80	50	600	5
LTV-816	DC Input, High Vceo Transistor output	5000	80	50	400	5

4-Pin DIP Photocoupler

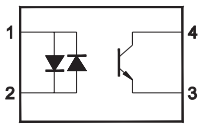

4Pin

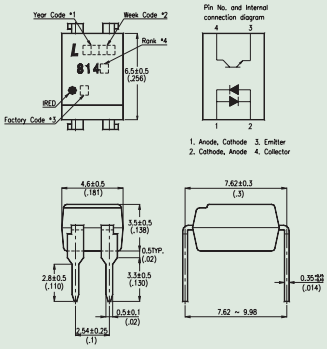

Part No.	Feature	Viso(Vrms)	Vceo(V)	CTR		
				Min.(%)	Max.(%)	IF(mA)
LTV-814	AC Input, Transistor output	5000	35	20	300	±1

4-Pin DIP Photocoupler

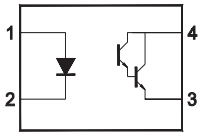

4Pin

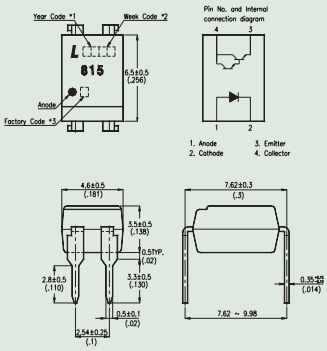

Part No.	Feature	Viso(Vrms)	Vceo(V)	CTR		
				Min.(%)	Max.(%)	IF(mA)
LTV-815	DC Input, Darlington output	5000	35	600	-	1

4-Pin DIP Photocoupler

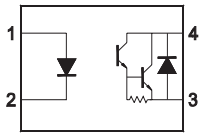

4Pin

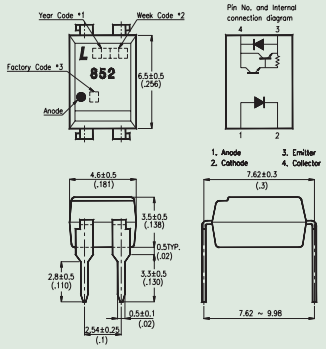

Part No.	Feature	Viso(Vrms)	Vceo(V)	CTR		
				Min.(%)	Max.(%)	IF(mA)
LTV-852	DC Input, High Vceo Darlington output	5000	300	1000	-	1

6-Pin DIP Photocoupler

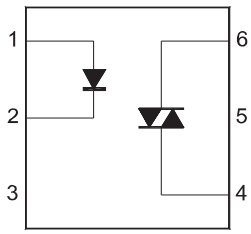

MOC Series

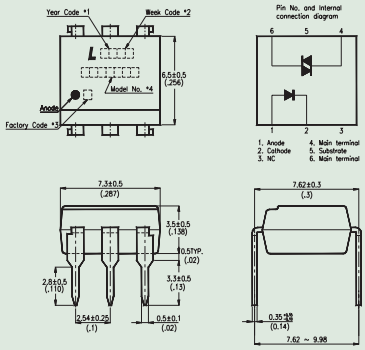

Part No.	Feature	Viso(Vrms)	Off-State Output	Trigger Current
			Vdrm.(V)	IFT(mA)
MOC3023	Triac output	5000	400	5
MOC3052		5000	600	10

6-Pin DIP Photocoupler

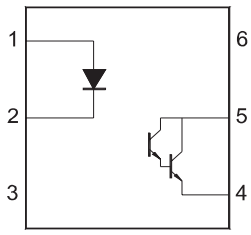

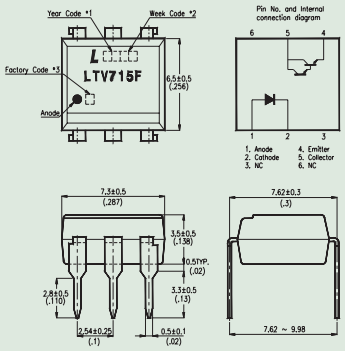

Part No.	Feature	Viso(Vrms)	Vceo(V)	CTR		
				Min.(%)	Max.(%)	IF(mA)
LTV-715F	Darlington output	5000	35	600	-	1

6-Pin DIP Photocoupler

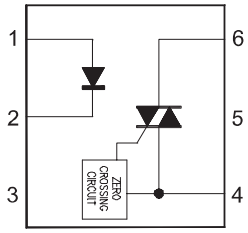

MOC Series

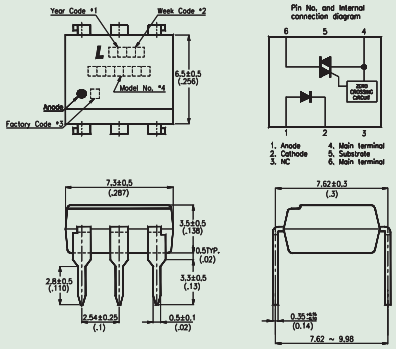

Part No.	Feature	Viso(Vrms)	Off-State Output	Trigger Current
			Vdrm.(V)	I_{FT}(mA)
MOC3063	Zero-Crossing Triac output	5000	600	5
MOC3083		5000	800	5

6-Pin DIP Photocoupler

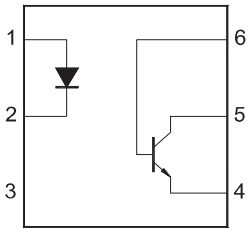

6Pin General

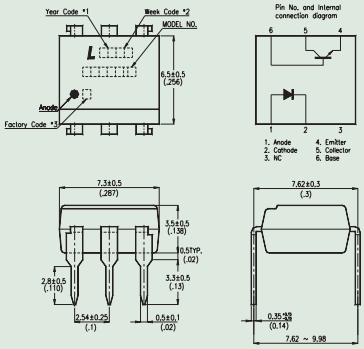

Part No.	Feature	Viso(Vrms)	Vceo(V)	CTR		
				Min.(%)	Max.(%)	I_F(mA)
CNY17-1	Transistor output	5000	70	40	80	10
CNY17-2				63	125	
CNY17-3				100	200	
CNY17-4				160	320	
LTV-702V	High Vceo Transistor output			40	320	
4N25	Transistor output	2500	30	20	-	
4N26		1500		20	-	
4N27		1500		10	-	
4N28		500		10	-	
4N35		3550		100	-	
4N37		1500		100	-	

6-Pin DIP Photocoupler

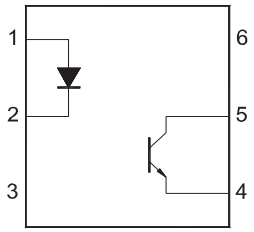

6Pin General

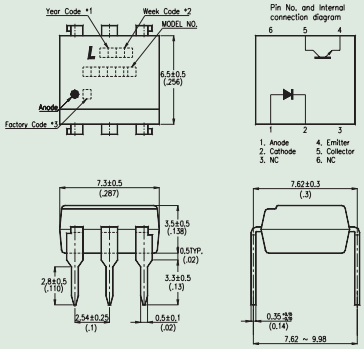

Part No.	Feature	Viso(Vrms)	Vceo(V)	CTR		
				Min.(%)	Max.(%)	I_F(mA)
CNY17F-1	Transistor output, Without base connection	5000	70	40	80	10
CNY17F-2				63	125	
CNY17F-3				100	200	
CNY17F-4				160	320	
LTV-702F	High Vceo Transistor output, without base connection			40	320	

6-Pin DIP Photocoupler

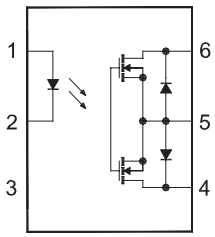

6 pins Photo Mosrelay

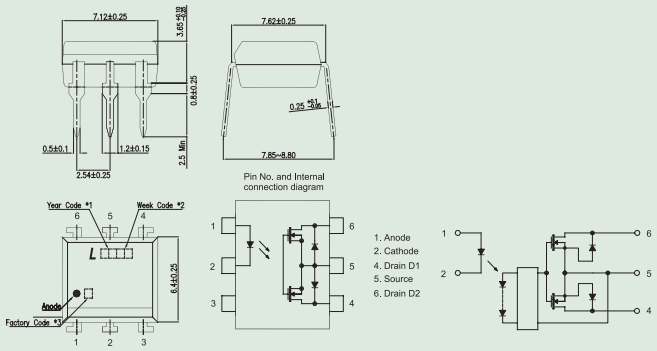

Part No.	Feature	Isolation Voltage BVs(V)	Off-State Output Terminal Voltage Voff(V)	On-State Current Ion(mA)	On-Statereistence (Ion=400mA,I_F=5mA) Ron(Ω) Max
LTV-592A	PhotoMosRelay output	2500	60	500	2
LTV-592G	PhotoMosRelay output	2500	60	500	2

6-Pin DIP Photocoupler

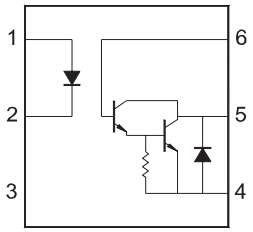

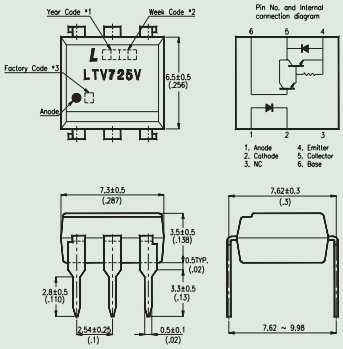

Part No.	Feature	Viso(Vrms)	Vceo(V)	CTR		
				Min.(%)	Max.(%)	IF(mA)
LTV-725V	High Vceo Darlington output	5000	300	1000	-	1

6-Pin DIP Photocoupler

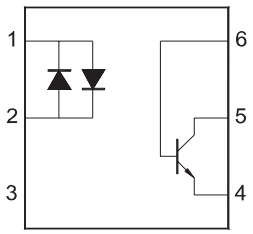

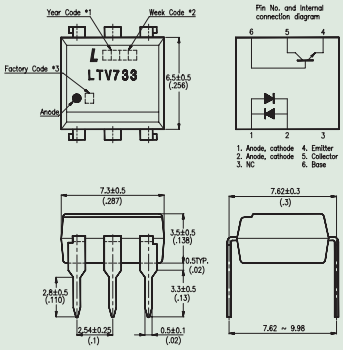

Part No.	Feature	Viso(Vrms)	Vceo(V)	CTR		
				Min.(%)	Max.(%)	IF(mA)
LTV-733	AC Input, Transistor output	5000	35	20	-	±1

8-Pin DIP Photocoupler

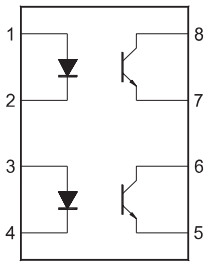

8Pin

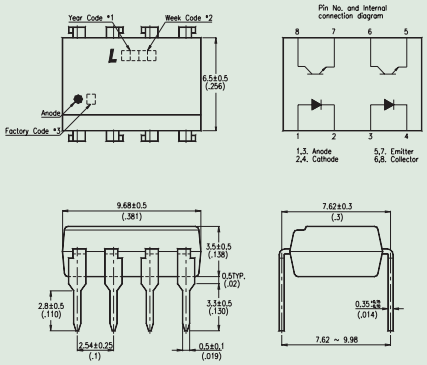

Part No.	Feature	Viso(Vrms)	Vceo(V)	CTR		
				Min.(%)	Max.(%)	IF(mA)
LTV-827	DC Input, Transistor output	5000	35	50	600	5
LTV-826	DC Input, High Vceo Transistor output	5000	80	50	400	5

8-Pin DIP Photocoupler

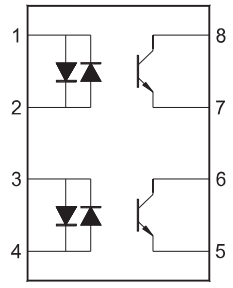

8Pin

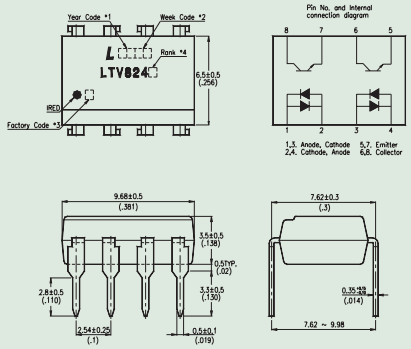

Part No.	Feature	Viso(Vrms)	Vceo(V)	CTR		
				Min.(%)	Max.(%)	I_F(mA)
LTV-824	AC Input, Transistor output	5000	35	20	300	±1

8-Pin DIP Photocoupler

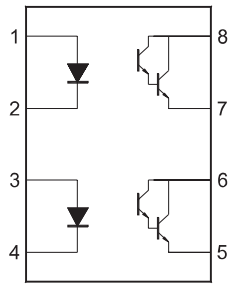

8Pin

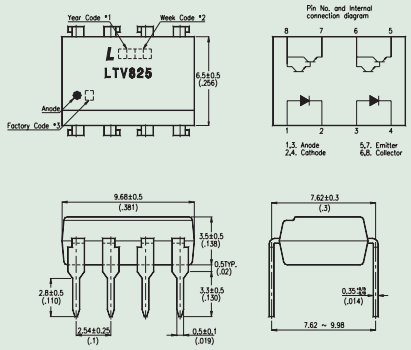

Part No.	Feature	Viso(Vrms)	Vceo(V)	CTR		
				Min.(%)	Max.(%)	I_F(mA)
LTV-825	DC Input, Darlington output	5000	35	600	-	1

8-Pin DIP Photocoupler

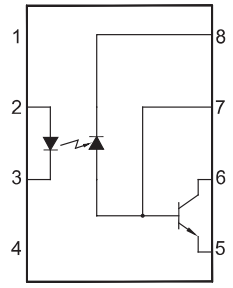

8Pin

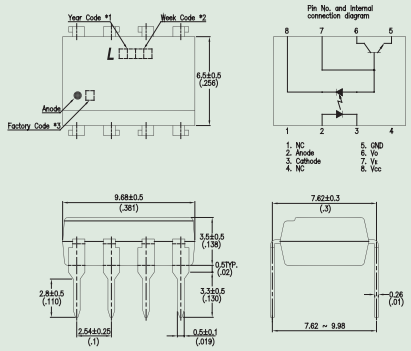

Part No.	Feature	Viso (Vrms)	Vceo (V)	CTR			t_{PLH}(μs) Max	t_{PHL}(μs) Max	CMR (V/μs@VCM)	
				Min. (%)	Max. (%)	If(mA)			CMR kV/μs (Min)	VCM (V)
6N135	DC Input, 1 MBd Transistor output	5000	20	7	50	16	2	2	1	10
6N136		5000	20	19	50	16	1	1	1	10

8-Pin DIP Photocoupler

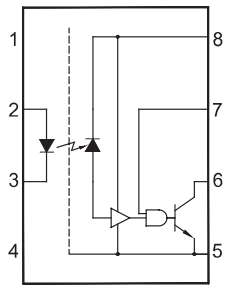

8Pin

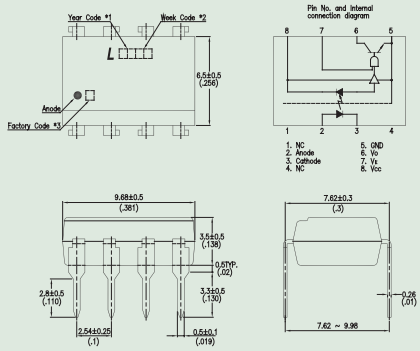

Part No.	Feature	Viso (Vrms)	I_F (on) mA Min	t_{PLH}(ns) Max	t_{PHL}(ns) Max	PWD (ns) Max	CMR (V/μs@VCM)	
							CMR kV/μs (Min)	VCM (V)
6N137	DC Input, 10 MBd Logic Gate output	5000	5	100	100	35	1	10

8-Pin DIP Photocoupler

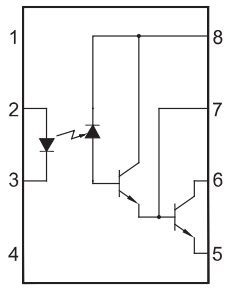

8Pin

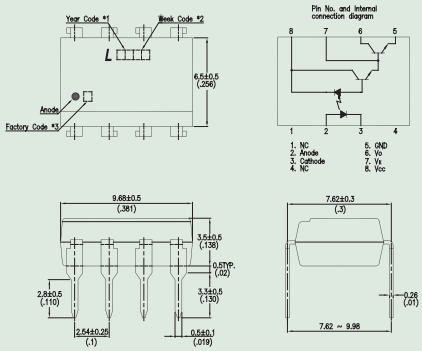

Part No.	Feature	Viso (Vrms)	I_F (on) mA Min	CTR			CMR (V/μs@VCM)	
				Min. (%)	Max. (%)	If(mA)	CMR kV/μs (Min)	VCM (V)
6N138	DC Input, 100 kBd Darlington Transistor output	5000	1.6	300	-	1.6	1	10
6N139		5000	0.5	400	-	0.5	1	10

16-Pin DIP Photocoupler

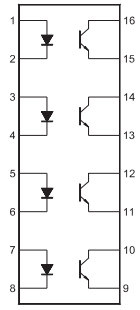

16Pin

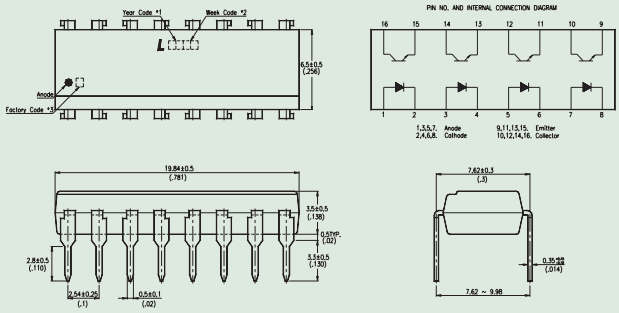

Part No.	Feature	Viso(Vrms)	Vceo(V)	CTR		
				Min.(%)	Max.(%)	I_F(mA)
LTV-847	DC Input, Transistor output	5000	35	50	600	5
LTV-846	DC Input, High Vceo Transistor output	5000	80	50	400	5

16-Pin DIP Photocoupler

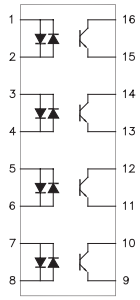

16Pin

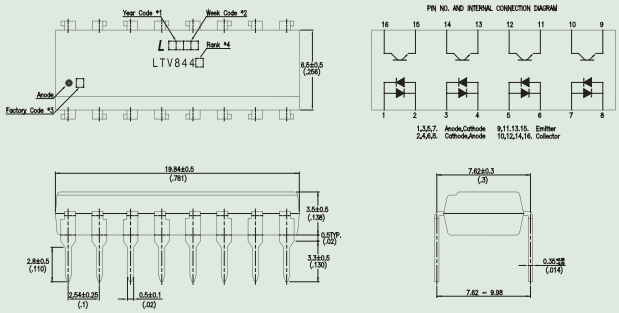

Part No.	Feature	Viso(Vrms)	Vceo(V)	CTR		
				Min.(%)	Max.(%)	I_F(mA)
LTV-844	AC Input, Transistor output	5000	35	20	300	±1

16-Pin DIP Photocoupler

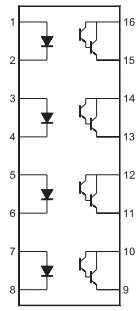

16Pin

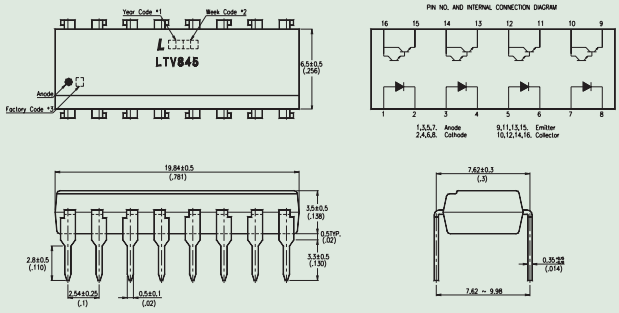

Part No.	Feature	Viso(Vrms)	Vceo(V)	CTR		
				Min.(%)	Max.(%)	I_F(mA)
LTV-845	DC Input, Darlington output	5000	35	600	-	1

BIN Table

Brightness Bin Selection for SMD

Group	Luminance in mcd (Iv)	
	Min.	Max.
A	0.12	0.18
B	0.18	0.28
C	0.28	0.45
D	0.45	0.71
E	0.71	1.12
F	1.12	1.8
G	1.8	2.8
H	2.8	4.5
J	4.5	7.1
K	7.1	11.2
L	11.2	18
M	18	28
N	28	45
P	45	71
Q	71	112
R	112	180
S	180	280
T	280	450
U	450	710
V	710	1120
W	1120	1800
X	1800	2800
Y	2800	4500

Brightness Bin Selection for Lamp

Group	Luminance in mcd (Iv)	
	Min.	Max.
3G	0.3	0.4
3H	0.4	0.5
3J	0.5	0.7
3K	0.7	0.9
3L	0.9	1.1
3M	1.1	1.4
3N	1.4	1.8
3P	1.8	2.3
3Q	2.3	3.0
3R	3.0	3.8
3S	3.8	5.0
3T	5.0	6.5
3U	6.5	8.5
3V	8.5	11.0
3W	11	14
3X	14	18
3Y	18	23
3Z	23	30
A	30	38
B	38	50
C	50	65
D	65	85
E	85	110
F	110	140
G	140	180
H	180	240
J	240	310
K	310	400
L	400	520
M	520	680
N	680	880
P	880	1150
Q	1150	1500
R	1500	1900
S	1900	2500
T	2500	3200

BIN Table

Brightness Bin Selection for Lamp

Group	Luminance in mcd (Iv)	
	Min.	Max.
U	3200	4200
V	4200	5500
W	5500	7200
X	7200	9300
Y	9300	12000
Z	12000	16000
5A	16000	21000
5B	21000	27000
5C	27000	35000
5D	35000	46000
5E	46000	60000

Brightness Bin Selection for LED Display

Group	Brightness Range in μcd/seg (10mA)	
	Min.	Max.
B	50	79
C	80	125
D	126	200
E	201	320
F	321	500
G	501	800
H	801	1300
J	1301	2100
K	2101	3400
L	3401	5400
M	5401	8600
N	8601	13700
P	13701	21820
Q	21821	34700
R	34701	55170
S	55171	87710
T	87711	139700
U	139701	223500
V	223501	357600
W	357601	572200
X	572201	915500

Brightness Bin Selection for Power LED

Group	Brightness Range in Lumen	
	Min.	Max.
J0	6.3	8.2
K0	8.2	10.7
L0	10.7	13.9
M0	13.9	18.1
N0	18.1	23.5
P0	23.5	30.6
Q0	30.6	39.8
R0	39.8	51.7
S0	51.7	67.2
T1	67.2	76.6
T2	76.6	87.4
U1	87.4	100
U2	100	113.6
V0	113.6	147.7
W0	147.7	192
X0	192	249.6

Distributors and Representatives in The World

ASIA / PACIFIC

CHINA

Cirtek Resources Corp., (Suzhou Branch)
Suite A06, 5F, No.800 , Gan Jiang East Rd., Suzhou City Jiang Su Province, P.R.C.
TEL:86-512-6827-9928
FAX:86-512-6750-7829

Cirtek Resources Corp., (Shenzhen Branch)
2803, No.1 Block, News Building, 1014 Shennan Zhong Rd Futian District, Shenzhen
TEL:86-755-8209-0400
FAX:86-755-8209-0121

Jyharn Electronic Tech.Co.,LTD. (Shenzhen Branch)
RM 1508-1509 15F., Shen Fu Bao Building, No. 8, Rong Hua Road, Fu Tian Free Borough Shenzhen, Guangdong 518030, CHINA
TEL:86-755-83740548
FAX:86-755-83740555

Jyharn Electronic Tech.Co.,LTD. (Suzhou Branch)
RM 601, Building 3rd, Gold River Interational Garden, No. 1088, Bin He Road, New District Suzhou Jiangsu 215011, CHINA
TEL:86-512-68091267
FAX:86-512-68096127

Lucky Star International (Shanghai) Co.,Ltd
Room 601, No.4 , Lane 300 , Liu Zhou Rd Shanghai, CHINA 200235
TEL:86-21-6408-9175~6
FAX:86-21-6408-9173

LIGHT ELECS CO., LTD
No. 95~96 Building, 5th Industry Zone, Ma Shan Tou Village, Gong Ming Town, Shen Zhen City, Guang Dong Province, China.
TEL:86-755-3384-2863
FAX:86-755-3384-2869

WPG China (SZ) Inc. SAC Business Group
T2F,Block East H1,the Hua Qiao Cheng Industrial Park,East Qiao Cheng Rd. Nanshan, Shenzhen, 518053, P.R.C.
TEL:86-755-2671-1655
FAX:86-755-2695-7066

WPG China Inc. SAC Business Group (Shanghai)
1F 60# Building NO.461 Hongcao Road, Shanghai, CHINA 200233 P.R.C
TEL:86-21-5426-3188
FAX:86-21-6401-9684

SILICON APPLICATION CO., LTD
Units C, 13/F., CDW Building, 388 Castle Peak Road, Tsuen Wan, N.T. Hong Kong
TEL:852-2757-9998
FAX:852-2750-4402

HK WA CHING ELECTRONICS (GROUP) LIMITED
9D,B,No.2 building,Jin Yuan Shi Dai Business center,Yuanda Road ,Haidian District, Beijing, China
TEL:86-10-51266018
FAX:86-10-88861752

YOSUN HONG KONG CORP. LTD. (WAREHOUSE)
RM A, 25/F, TSUEN WAN INT'L CENTRE, 68 WANG LUNG STREET, TSUEN WAN , NT., HK
TEL:852-2409-6880
FAX:852-2409-6481

YOSUN SOUTH CHINA CORP. LTD.
17、18、19/F, No.1016, Fuzhongyi Road, Shenzhen Metro Building, Futian District, Shenzhen, P.R.C.
TEL:86-755-2399-2268
FAX:86-755-2399-2222

YOSUN SHANGHAI CORP. LTD.
15 F., New Century Office Center, No.1111, Pudong S. Rd., Pudong Newly Developed Area, Shanghai, China
TEL:86-21-5836-5838
FAX:86-21-5835-5869

YOSUN SHANGHAI CORP. LTD. (SUZHOU OFFICE)
29F Sovereign Building, #8 Suhua Road, Suzhou Industrial Park, Jiangsu, 215021, China
TEL:86-512-8717-6558
FAX:86-512-8717-6550

YOSUN SHANGHAI CORP. LTD. (BEIJING OFFICE)
Room 1106, Beijing Satellite Building, No. 63, Zhi Chun Road, Hai Dian District, Beijing, China
TEL:86-10-5165-9886
FAX:86-10-6253-7066

YOSUN SHANGHAI CORP. LTD. (NANJING OFFICE)
Room 2020, Li'ao Building, No. 323, Zhongyang Road, Gulou District, Nanjing, China
TEL:86-25-8355-6429
FAX:86-25-8355-6450

YOSUN SHANGHAI CORP. LTD. (QINGDAO OFFICE)
Rm. 16H, 16/F. Huaren Internation Building No. 2 Jia, Shandong Road, Qingdao, Shandong 266071, China
TEL:86-532-8386-8412
FAX:86-532-8389-4817

YOSUN SHANGHAI CORP. LTD. (NINGBO OFFICE)
Room 1005, 10F, No.181, Chungshan E. Road, Ning Bo, China
TEL:86-574-8776-5669
FAX:86-574-8776-5669

YOSUN SOUTH CHINA CORP. LTD. (XIAMEN OFFICE)
H1 Unit 14 Floor, International Plaza, No.8, Lujiang Road, Xiamen, P.R.C.
TEL:86-592-2117598
FAX:86-592-211-7595

HK WACHING ELECTRONIC (GROUP) LIMITED
Room102, Shui Hing Centre, No.13 Sheung Yuet Road, Kowloon Bay, Kowloon, Hong Kong
TEL:852-2795-7108

Barley Opto Electronics Ltd.
Unit 503. 5/F., Shing Yip Industrial Building, 19-21, Shing Yip Street, Kwun Tong, Kowloon, H.K.
TEL:852-2763-1205
FAX:852-2125-0538

INDIA

Avnet India
#45, 1st Floor, Okhla Industrial Estate, Phase 3, New Delhi-110020
TEL:91-11-2684-1700
FAX:91-11-2684-1709

Arrow Electronics India Private Ltd
2nd Floor, 5 Pua Road, New Delhi-110005
TEL:91-11-4504-5500
FAX:91-11-2875-5751

Distributors and Representatives in The World

ISRAEL

ZIONTRONICS LTD.
14 Raoul Valenberg St.,
Ramat Hachaya 69719
TEL-Aviv Israel
P. O. Box 13123 TEL-Aviv 61131.
TEL:972-3-6498642
FAX:972-3-6498986
http://www.ziontronics.co.il
& info@ziontronics.co.il

KOREA

Jaytronics Ins
15F, Daerung Technotown, 12 Cha,
327-32' Gasan-Dong, Seoul 153-802
TEL:82-2-2705-4942
FAX:82-2-2060-3399

SINGAPORE

Yosun Singapore Pte Ltd
159 Sin Ming Road, #04-04 Antech
Building Singapore 575625
TEL:65-6552-4811
FAX:65-6552-5811

Serial Microelectronics Pte Ltd
8 Ubi View, #04-00, Serystem
Building Singapore 408554
TEL:65-6510-2408
FAX:65-6510-2437

Pascom Pte Ltd
2 Jurong East Street 21, #05-12,
IMM Building, Singapore 609601
TEL:65-6792-8212
FAX:65-6792-8211

Avent Pte Ltd
151 Lorong Chuan, New Tech Park,
#0603, Singapore 556741
TEL:65-6580-6000
FAX:65-6580-6200

Future Pte Ltd
460 Alexandra Road, #12-00, PBA
Building, Singapore 119963
TEL:65-6479-1300
FAX:65-6479-3151

TAIWAN

Cirtek Resources Corp.
9F, No. 34, Sec. 3, Pa-Teh Rd.,
Taipei, Taiwan, R.O.C
TEL:886-2-2570-2349
FAX:886-2-2578-5937

Imperial Star Corp.
6Fl-4, No.27, Lane 61, Sec. 1 ,
Kuang -Fu Rd , Sanchung City,
Taipei, Taiwan 241 R.O.C
TEL:886-2-2999-1152
FAX:886-2-2999-1165

Jyharn Electronic Tech. Co., LTD.
No. 396, Zengzih Rd., Zuoying
District
Kaohsiung, Taiwan, 813, R.O.C
TEL:886-7-3478-166
FAX:886-7-3478-181
(Head Office)

Jyharn Electronic Tech. Co., LTD.
RM 2, 5F., No 351, Sec.2,
Jhongshan Rd.,
Jhonghe, Taipei, Taiwan, 235 R.O.C
TEL:886-2-8228-1136
FAX:886-2-82281866
(Taipei Branch)

Jyharn Electronic Tech. Co., LTD.
8F-6, No.472, Sec. 1, Guangfu Rd.,
Hsinchu, Taiwan, 300 R.O.C
TEL:886-3-5634-545
FAX:886-3-5634-515
(Hsinchu Branch)

Silicon Application Corp.-Head Office
18F, No.2 Jiann-ba Road, Joung-
Her City,
Taipei Hsien, Taiwan 23511 R.O.C
TEL:886-2-8226-1500
FAX:886-2-8226-1506

LUMAX INTERNATIONAL CO., LTD
12F, NO.3-1,Yuanqu Street, Taipei
115, Taiwan
(Nan Kang Software Park)
TEL:866-2-2788-3656
FAX:886-2-2788-3568
882-2-2788-7226

YOSUN INDUSTRIAL CORP.
9th Floor, 489, Section 2,
Tiding Avenue-Neihu District,
Taipei, Taiwan
TEL:886-2-2659-8168
FAX:886-2-2659-7869

EURPOE

AUSTRALIA

ARROW ELECTRONICS AUSTRALIA PTY LTD
9-10 Bastow Place
Mulgrave
AUS-3170 Victoria
TEL:61-2-9868-9900
FAX:61-2-9868-9901

AUSTRIA

RUTRONIK
Elektronische Bauelemente GmbH
Waidhausenstrasse 19, Top 10
A-1140 Wien
TEL:43-1419-6550
FAX:43-1419-6550-33
http://www.rutronik.com

SPOERLE ELECTRONIC
Am Kehlerpark
A-6850 Dornbirn
TEL:43-5572-38-65-00-0
FAX:43-5572-38-65-00-90

SPOERLE ELECTRONIC
Landstraßer Hauptstraße 97-101 /
Stiege 1 / 4A
A-1030 Wien
TEL:43-1-3-60-46-0
FAX:43-1-3-60-46 90

BELGIUM

SPOERLE ELECTRONIC
Keiberg II
Minervastraat 14/B2
B-1930 Zaventem
TEL:32-2-7-25-46-60
FAX:32-2-7-25-45-11

RUTRONIK
Elektronische Bauelemente GmbH
Keppekouter 1,
Ninovesteenweg 198
B-9370 Erembodegem
TEL:32-53-606590
FAX:32-53-771262

BULGARY

RUTRONIK
Elektronische Bauelemente GmbH
Kliment Ohridski blvd. 27A section 4,
floor 3, apartment 65
BG-1756 Sofia
TEL:359-29748646
FAX:359-29748645
http://www.rutronik.com

Distributors and Representatives in The World

CZECH REPUBLIK & SLOVAKIA

SPOERLE ELECTRONIC
Hvězdova 1716/2b
CZ-140 78 Praha 4
TEL:+420 222 755 420
FAX:+420 239 017 522

SPOERLE ELECTRONIC
Roznavska 24
SK-821 04 Bratislava
TEL:+421 2 326043-00
FAX:+421 2 326043-11

RUTRONIK
Elektronische Bauelemente CZ spol.sr.o
Papirenska 1
CZ-160 00 Praha 6
TEL:+420 233343120
FAX:+420 233323955

RUTRONIK
Elektronische Bauelemente CZ spol.sr.o
Slavickova 1a
SK-63800 Brno
TEL:+420 5 45193517
FAX:+420 5 45222256

RUTRONIK
Elektronische Bauelemente GmbH O.Z.
Lazovna 11
SK-97401 Banstá Bystrica
TEL:+421 48 47 223 00
FAX:+421 48 47 223 08

DENMARK

ABACUS CONELEC A/S
Knudlundvej 24
DK 8653 Them
TEL:+45 86848484
FAX:+45 86848244
http://www.abacusconelec.dk

ARROW DENMARK
Smedeholm 13A
DK-2730
Herlev
TEL:+45 70 10 22 11
FAX:+45 44 50 82 10

RUTRONIK
Elektronische Bauelemente GmbH
Hestedostervej 27-29
DK-2620 Albertslund
TEL:+45 70 20 19 63
FAX:+45 70 20 19 73
http://www.rutronik.com

ESTONIA

ARROW ELECTRONICS ESTONIA OÜ
Järvevana Tee 9
EE-11314
Tallinn
TEL:+372 6 77 42 50
FAX:+372 6 77 42 51

FINLAND

ARROW FINLAND OY
Kalkkipellontie 4
PO Box 280
FI-02600
Espoo
TEL:+358 9 47 66 60
FAX:+358 9 47 66 63 27(Sales)

YLEISEELEKTRONIIKKA OY
Luomannotko 6
FIN-02200 Espoo
TEL:+358-9-4526 21
FAX:+358-9-4526 2202
http://www.yeint.fi

RUTRONIK
Elektronische Bauelemente GmbH
Kirkonkyläntie 3
FIN-007000 Helsinki
TEL:+358-9-3291 2200
FAX:+358-9-3291 2222

GERMANY

OPTOTECH GMBH
Am Hafen 32
D-38112 Braunschweig
TEL:+49 531 214952-0
FAX:+49 531 214952-20
E-mail:info@optotech-gmbh.de
http://www.optotech-gmbh.de

SCHUKAT
ELECTRONIC VERTRIEBS GMBH
Daimlerstraße 26
D-40789 Monheim am Rhein
TEL:+49 2173-950 5
FAX:+49 2173-950 999
http://www.schukat.com

SPOERLE – A Division of Arrow Central Europe
Arrow Central Europe GmbH
Max-Planck-Str. 1-3
D-63303 Dreieich
Germany
TEL:+49 6103 304-0
FAX:+49 6103 304-201
http://www.spoerle.com

Rutronik Elektronische Bauelemente GmbH
Industriestrasse 2
D-75228 Ispringen
TEL:+49 7231 801 0
FAX:+49 7231 822 82

HUNGARY

RUTRONIK
Magyarorszag Kft.
Fehervani ut 89-95
HU-1119 Budapest
TEL:+36 1 371 06 66
FAX:+36 1 371 06 67
http://www.rutronik.com

SPOERLE ELECTRONIC
Váci út 140
HU-1138 Budapest
TEL.:+36 1 288 7300
FAX:+36 1 288-7301

ITALY

PAN ELEKTRON S.R.L
Via P.F. Mola, 39
I-20156 Milano
TEL:+39 2 33007446
FAX:+39 2 33006042
E-mail:info@panelektron.it

LATVIA

ARROW LATVIA
Unijas 47
LV-1039, Riga
TEL:+371 7311490
FAX:+371 7313195
Email:latvia@arrownordic.com

LITHUANIA

ARROW LITHUANIA
Savanoriu pr. 363A-306
Kaunas
LT-49425
TEL:+370 37 759015
FAX:+370 37 452801
Email:lithuania@arrownordic.com

Rutronik Elektronische Bauelemente
Randondvario pl. 76
LT-47182 Kaunas
TEL:+370 37 261 780
FAX:+370 37 210 363

NORWAY

ABACUS NORWAY
Elveveien 26, Box 356
N-1472 Fjellhamar
TEL:+47 67 97 87 20
FAX:+47 67 97 87 21
E:info@abacusnorway.no
http://www.abacusnorway.no

Distributors and Representatives in The World

ARROW NORWAY
Trygve Nilsens Vei 8
P.O. Box 92 Furuset
N-1001
Oslo
Norway
TEL:+47 52763000
FAX:+47 21306550
e-mail:SalesNO@arrownordic.com

Rutronic Elektronische Bauelemente GmbH
Olaf Helsetsvei 6
N-0694 Oslo
TEL:+47 2276 7920
FAX:+47 2276 7921

POLAND

SPOERLE ELECTRONIC
ul. W. Rzymowskiego 53
PL-02 -697 Warszawa
TEL:+48 22 558 82 82
FAX:+48 22 558 82 83

RUTRONIK Polska Sp. z.o.o.
ul. Sasiedzka 11
44244 Zory
TEL:+48 32 4 75 90-20
FAX:+48 32 4 75 90-22

RUTRONIK Polska Sp. z.o.o.
ul. Patriotous 110
PL-04-844 Warszawa
TEL:+48 22 332 7370
FAX:+48 22 332 7372

REP. SOUTH AFRICA

HI-Q ELECTRONICS (PTY) LTD
Syfin House, 2nd Floor
Fairway Close, Parow
7500 Cape Town
TEL:+27 21 595-1307
FAX:+27 21 595-3820
E-Mail:sales@hi-q.co.za

RUSSIA

RUTRONIK Beteiligungsgesellschaft mbH
Leningradskoje Chaussee 16
Building 3, Office 403
125171 Moskau
TEL:+7 4957862800
FAX:+ 7 4957862803
http://www.rutronik.com

SPOERLE ELECTRONIC
ul. Konjushkovskaya 28
123242 Moskau
TEL:+7 95 926 55 97
FAX:+7 95 926 55 98

SPOERLE ELECTRONIC
Suvorovsky prospect, 53
191015 Saint-Petersburg
TEL:+7 812 334 3101
FAX:+7 812 334 3102

SWEDEN

ARROW SWEDEN
Box 67
Kronborgsgränd 19
SE-164 94
Kista
TEL:+46 8 56265500
FAX:+46 8 56265550
(Arrow Sweden)

SWITZERLAND

Rutronik Nordic AB
Kista Science Tower
Färögatan 33
S-16451 Kista
TEL:+46 8 505 54900
FAX:+46 8 505 54950

RUTRONIK ELEKTRONISCHE BAUELEMENTE AG
Hoelzliwisenstrasse 5
CH-8604 Volketswil
TEL:+41 44 9473737
FAX:+41 44 9473747
E-mail:rutronik-ch@rutronik.com
http://www.rutronik.com

SPOERLE ELECTRONIC
En Chamard
1442 Montagny p/Yverdon
TEL:+41 24 4 47 01 00
FAX:+41 24 4 45 52 45

SPOERLE ELECTRONIC
Riedmatt 9
8153 Rümlang
TEL:+41 44 817 62 62
FAX:+41 44 817 62 00

THE NETHERLANDS

RUTRONIK Elektronische Bauelemente GmbH
Madame Curiestraat 2
NL-3316 GN Dordrecht
TEL:+31 78 6521380
FAX:+31 78 6521381

SPOERLE ELECTRONIC
Postbus 476
3990 GC Houten
Elzenkade 3
NL-3992 AD Houten
TEL:+31 30 6 39 12 34
FAX:+31 30 6 39 12 05

TURKEY

SMH Semih engineering Trading ltd.
Hilmipasa Cad Parlar apt.
No. 35 Kat 6 D.16
TR-81090 Kzyatagi/Istanbul
TEL:+91-216 463 2057

UKRAINE

SPOERLE ELECTRONIC
Garmatna str 21/30
03067 Kiev
TEL.:+380 44 4564726
FAX:+380 44 4580590

UNITED KINGDOM

ARROW ELECTRONICS UK LTD
London Road Campus
London Road
Harlow
Essex
CM17 9NA
TEL:+44 1279 626777:Sales-
TEL:+44 1279 441144:Reception-
FAX:+44 1279 455777

Rutronik UK Ltd.
Deakins Business Payk
Blackburn Road, Egerton BL7 9RP
Bolton UK
TEL:+44 1204 602200
FAX:+44 1204 602210

Future House
The Glanty
Sureey
TW20 9AH Egham UK
TEL:+44 1784275000
FAX:+44 1784275600

Distributors and Representatives in The World

USA

ALABAMA

REP INC
CORPORATE OFFICE
11535 GILLELAND ROAD
HUNTSVILLE, AL 35803
TEL:256-881-9270
FAX:256-882-6692

ARROW ELECTRONICS
HUNTSVILLE, AL 35805
TEL:256-864-3350
FAX:256-864-3399

AVNET ELECTRONICS
HUNTSVILLE, AL 35805
TEL:256-837-8700
FAX:256-830-8404

DIGI-KEY
THIEF RIVER FALLS, MN 56701
TEL:218-681-6674
FAX:218-681-3380

FUTURE ELECTRONICS
HUNTSVILLE, AL 35816
TEL:205-971-2010
FAX:205-922-0004

MOUSER ELECTRONICS
MANSFIELD, TX 76063
TEL:817-804-3888
FAX:817-804-3899

ARIZONA

REPTRONIX LTD.
2223 S. 48TH STREET, STE. I
TEMPE, AZ 85282
TEL:602-230-2630
FAX:602-431-1087

ARROW ELECTRONICS
TEMPE, AZ 85282
TEL:602-966-6600
FAX:602-966-4826

AVNET ELECTRONICS
PHOENIX, AZ 85034
TEL:480-643-8778
FAX:480-643-8768

DIGI-KEY
THIEF RIVER FALLS, MN 56701
TEL:218-681-6674
FAX:218-681-3380

FUTURE ELECTRONICS
PHOENIX, AZ 85034
TEL:800-950-7140
FAX:602-629-3041

MOUSER ELECTRONICS
MANSFIELD, TX 76063
TEL:817-804-3888
FAX:817-804-3899

ARKANSAS
ARROW ELECTRONICS
TULSA, OK 74146
TEL:918-252-7537
FAX:918-254-1687

AVNET ELECTRONICS
TULSA, OK 74146
TEL:918-459-6000
FAX:918-459-6060

DIGI-KEY
THIEF RIVER FALLS, MN 56701
TEL:218-681-6674
FAX:218-681-3380

MOUSER ELECTRONICS
MANSFIELD, TX 76063
TEL:817-804-3888
FAX:817-804-3899

CALIFORNIA (NORTHERN)

EWING-FOLEY, INC (CUPERTINO, CA)
10061 BUBB ROAD, SUITE A
CUPERTINO, CA 95014
TEL:408-342-1200
FAX:408-342-1201

EWING-FOLEY, INC (SACRAMENTO, CA)
13620 LINCOLN WAY, SUITE 100
AUBURN, CA 95603
TEL:530-885-6591
FAX:530-885-6594

ARROW ELECTRONICS
SANTA CLARA, CA 95051
TEL:408-727-2500
FAX:408-727-5896

ROSEVILLE, CA 95661
TEL:916-797-3200
FAX:916-772-4220

DIGI-KEY
THIEF RIVER FALLS, MN 56701
TEL:218-681-6674
FAX:218-681-3380

FUTURE ELECTRONICS
SAN JOSE, CA 95131
TEL:408-434-1122
FAX:408-262-0741

ROSEVILLE, CA 95661
TEL:916-783-7877
FAX:916-783-7988

RENO, NV 89502
TEL:775-826-2500
FAX:775-826-2664

MOUSER ELECTRONICS
MANSFIELD, TX 76063
TEL:817-804-3888
FAX:817-804-3899

WALKER COMPONENT GROUP
SACRAMENTO, CA 95827
TEL:916-363-6030
FAX:916-362-6926

CALIFORNIA (SOUTHERN)

WEST ELECTRONIC SALES
17330 BROOKHURST ST. UNIT 340
FOUNTAIN VALLEY, CA 92708
TEL:714 465-3720
FAX:714 465-3734

WEST ELECTRONIC SALES
5355 AVENIDA ENCINAS, STE 207
CARLSBAD, CA 92008
TEL:760-929-1615
FAX:760-929-1619

ARROW ELECTRONICS
SANTA CLARA, CA 95051
TEL:408-727-2500
FAX:408-727-5896

ARROW ELECTRONICS
ROSEVILLE, CA 95661
TEL:916-797-3200
FAX:916-772-4220

ARROW ELECTRONICS
AGOURA HILLS, CA 91301
TEL:818-865-7900
TEL:800-525-6666
FAX:818-991-7695

ARROW ELECTRONICS
EL SEGUNDO, CA: 90245-0942
TEL:310-826-2355
TEL:800-525-6666
FAX:310-826-1534

ARROW ELECTRONICS
IRVINE, CA 92718
TEL:949-454-4290
FAX:949-454-4289

ARROW ELECTRONICS
CALABASAS, CA 91302
TEL:818-880-9686
FAX:818-880-4687

ARROW ELECTRONICS
SAN DIEGO, CA 92123
TEL:619-565-4800
FAX:619-565-2959

ARROW ELECTRONICS
SANTE FA SPRINGS, CA 90670
TEL:310-921-1580
FAX:310-921-9385

ARROW ELECTRONICS
GARDEN GROVE,
TEL:714-895-0060
FAX:714-373-0129

Distributors and Representatives in The World

AVNET ELECTRONICS
ROCKLIN, CA 95765
TEL:916-632-4500
FAX:916-632-4545

AVNET ELECTRONICS
WOODLAND HILLS, CA 91367
TEL:818-594-0404
FAX:818-594-8233

AVNET ELECTRONICS
IRVINE, CA 92618
TEL:949-789-4150
FAX:949-789-4121

AVNET ELECTRONICS
SAN DIEGO, CA 92127
TEL:858-385-7500
FAX:858-385-7640

DIGI-KEY
THIEF RIVER FALLS, MN 56701
TEL:218-681-6674
FAX:218-681-3380

EDGE ELECTRONICS
NEWPORT BEACH, CA 92660
TEL:949-752-0553
FAX:949-752-0551

FUTURE ELECTRONIC
IRVINE, CA 92618
TEL:714-453-1515
FAX:714-453-1226

FUTURE ELECTRONIC
CALABASAS, CA 91302
TEL: 818-871-1740
FAX: 818-871-1764

FUTURE ELECTRONIC
SAN DIEGO, CA 92122
TEL: 858-625-2800
FAX: 858-625-2810

MOUSER ELECTRONICS
MANSFIELD, TX 76063
TEL: 817-804-3888
FAX: 817-804-3899

WALKER COMPONENT GROUP
LAKE FOREST, CA 92639
TEL:949-597-2081
FAX:949-581-5338
TOLL :800-729-3230

COLORADO

ENGLISH DAMCO SALES
3000 S.JAMAICA COURT, SUITE 370
AURORA, CO 80014
TEL:303-695-0706
FAX:303-695-0827

ARROW ELECTRONICS
ENGLEWOOD, CO 80112
TEL:303-600-1200
FAX:303-600-1203

AVNET ELECTRONICS
ENGLEWOOD, CO 80111
TEL:303-790-1662
FAX:303-790-4991

DIGI-KEY
THIRF RIVER FALLS, MN 56701
TEL:218-681-6674
FAX:218-681-3380

FUTURE ELECTRONICS
GOLDEN, CO:80401
TEL:303-277-0223
FAX:303-277-0722

MOUSER ELECTRONICS
MANSFIELD, TX 76063
TEL:817-804-3888
FAX:817-804-3899

WALKER COMPONENT GROUP
DENVER, CO 80229
TEL:303-292-5537
FAX:303-292-0114

CONNECTICUT

GERBER SALES
330 BOSTON ROAD
BILLERICA, MA 0186
TEL:978-663-1435
FAX:978-663-1445

ARROW ELECTRONICS
WALLINGFORD, CT 06492
TEL:203-265-7741
FAX:203-265-7988

AVNET ELECTRONICS
WALLINGFORD, CT 06492
TEL:203-284-5700

FUTURE ELECTRONICS
CHESHIRE, CT 06410
TEL:203-250-0083
FAX:203-250-0081

DIGI-KEY
THIEF RIVER FALLS, MN 56701
TEL:218-681-6674
FAX:218-681-3380

MOUSER ELECTRONICS
MANSFIELD, TX 76063
TEL:817-804-3888
FAX:817-804-3899

DELAWARE

ASTROREP MID ATLANTIC, INC.
65 W, STREET ROAD, SUITE B203
WARMINSTER, PA 18974
TEL:215-957-9580
FAX:215-957-9583

ARROW ELECTRONICS
COLUMBIA, MD 21046
TEL:410-309-0686
FAX:410-309-0699

AVNET ELECTRONICS
COLUMBIA, MD 21046
TEL:480-643-8389
FAX:480-643-8768

DIGI-KEY
THIEF RIVER FALLS, MN 56701
TEL:218-681-6674
FAX:218-681-3380

FUTURE ELECTRONICS
LINTHICUM, MD 20701
TEL:410-314-1111
FAX:410-314-1110

MOUSER ELECTRONICS
MANSFIELD, TX 76063
TEL:817-804-3888
FAX:817-804-3899

FLORIDA

MEGA TECHNOLOGIES INC
1600 SARNO RD SUITE 21
MELBOURNE, FL 32935
TEL:321-752-6767
FAX:321-752-7484

MEGA TECHNOLOGIES INC.
2813 NE 15 TERR
WILTON MANORS, FL 33334

MEGA TECHNOLOGIES
2510 CYPRESS BEND DR EAST
CLEARWATER, FL 33761

ARROW ELECTRONICS
LAKE MARY, FL 32746
TEL:407-339-0078
FAX:407-339-0139

FUTURE ELECRONICS
DEERFIELD BEACH, FL33441
TEL:954-429-8200
FAX:954-428-3991

AVNET ELECTRONICS
CLEARWATER, FL 33760
TEL:727-507-5000
FAX:727-507-5050

AVNET ELECTRONICS
FT LAUDERDALE, FL 33309
TEL:954-484-5482
FAX:954-484-2995

AVNET ELECTRONICS
WINTER PARK, FL 32792
TEL:407-657-3300
FAX:407-678-4414

Distributors and Representatives in The World

FUTURE ELECTRONICS
CLEARWATER, FL 33760
TEL:727-531-3062
FAX:727-535-5871

FUTURE ELECTRONICS
DEERFIELD BEACH, FL 33442
TEL:954-428-9494
FAX:954-428-9477

FUTURE ELECTRONICS
LAKE MARY, FL 32746
TEL:407-865-9555
FAX:407-865-5969

DIGI-KEY
THIEF RIVER FALLS, MN 56701
TEL:218-681-6674
FAX:218-681-3380

MOUSER ELECTRONICS
MANSFIELD, TX 76063
TEL:817-804-3888
FAX:817-804-3899

GEORGIA

REP INC
708 HOLCOMB BRIDGE ROAD #2
NORCROSS, GA 30071
TEL:770-662-89823
FAX:256-882-6692

ARROW ELECTRONICS
DULUTH, GA 30096
TEL:770-497-1300
FAX:770-476-1493

AVNET ELECTRONICS
DULUTH, GA 30096
TEL:770-623-4400
FAX:770-476-8806

DIGI-KEY
THIEF RIVER FALLS, MN 56701
TEL:218-681-6674
FAX:218-681-3380

FUTURE ELECTRONICS
DULUTH, GA 30096
TEL:770-476-3900
FAX:770-476-8662

MOUSER ELECTRONICS
MANSFIELD, TX 76063
TEL:817-804-3888
FAX:817-804-3899
IDAHO (NORTH)

IDAHO(NORTH)

ECS
1000, 5th AVENUE N.W., STE A
ISSAQUAH, WA 98027-2409
TEL:425-369-0993
FAX:425-369-0988

ARROW ELECTRONICS
BELLEVUE, WA 98007-6462
TEL:425-643-9992
FAX:425-643-9709

AVNET ELECTRONICS
REDMOND, WA 98052
TEL:425-882-7000

DIGI-KEY
THIEF RIVER FALLS, MN 56701
TEL:218-681-6674
FAX:218-681-3380

FUTURE ELECTRONICS
BOTHELL, WA 98021
TEL:425-485-6616
FAX:425-483-6109

MOUSER ELECTRONICS
MANSFIELD, TX 76063
TEL:817-804-3888
FAX:817-804-3899

IDAHO (SOUTH)

ENGLISH DAMCO SALES
753 W. POTOMAC DR.
MURRAY, UT 84123
TEL:801-281-8626
FAX:801-281-8628

ARROW ELECTRONICS
SALT LAKE CITY, UT 84119
TEL:801-973-8555
FAX:801-973-8909

AVNET ELECTRONICS
SALT LAKE CITY, UT 84121
TEL:801-365-3800
FAX:801-365-3821

DIGI-KEY
THIEF RIVER FALLS, MN 56701
TEL:218-681-6674
FAX:218-681-3380

FUTURE ELECTRONICS
SALT LAKE CITY, UT 84106
TEL:801-467-4448
FAX:801-467-3604

MOUSER ELECTRONICS
MANSFIELD, TX 76063
TEL:817-804-3888
FAX:817-804-3899

WALKER COMPONENT GROUP
WEST VALLEY CITY, UT 84120
TEL:801-977-9750
FAX:801-975-1207

ILLINOIS

SUMER INC.
1675 HICKS ROAD
ROLLING MEADOWS, IL 60008
TEL:847-991-8500
FAX:847-991-0474

ARROW ELECTRONICS
ITASCA, IL 60143
TEL:630-250-0500
FAX:630-250-0916

FUTURE ELECTRONICS
HOFFMAN ESTATES, IL 60195
TEL:847-273-0067
TEL:847-273-0730
FAX:847-490-9576
FAX:847-490-9479

WALKER COMPONENT GROUP
HOFFMAN ESTATES, IL 60195
TEL:847-843-2040
FAX:847-843-2320

AVNET ELECTRONICS
ARLINGTON HEIGHTS, IL 60005
TEL:847-797-7300
FAX:847-797-7323

DIGI-KEY
THIEF RIVER FALLS, MN 56701
TEL:218-681-6674
FAX:218-681-3380

MOUSER ELECTRONICS
MANSFIELD, TX 76063
TEL:817-804-3888
FAX:817-804-3899

INDIANA

ELECTRO REPS.
12315 HANCOCK STREET
SUITE# 29
CARMEL, INDIANA 46032
TEL:317-569-7202
FAX:317-569-7203

ARROW ELECTRONICS
INDIANAPOLIS, IN 46250
TEL:317-913-1100
FAX:317-570-1344

ARROW ELECTRONICS
FORT WAYNE, IN 46825
TEL:260-490-2323
FAX:260-497-8235

AVNET ELECTRONICS
CARMEL, IN 46032
TEL:317-575-3500
FAX:317-575-3535

FUTURE ELECTRONICS
INDIANAPOLIS, IN 46250
TEL:317-913-1355
FAX:317-913-1375

DIGI-KEY
THIEF RIVER FALLS, MN 56701
TEL:218-681-6674
FAX:218-681-3380

Distributors and Representatives in The World

MOUSER ELECTRONICS
MANSFIELD, TX 76063
TEL:817-804-3888
FAX:817-804-3899

IOWA

JOHNSON COMPANY
1775 OLD HIGHWAY 8 SUITE 110
NEW BRIGHTON, MN 55112
TEL:651-429-2544
FAX:651-429-3104

ARROW ELECTRONICS
EDEN PRARIE, MN 55344
TEL:952-828-5350
FAX:952-828-5399

AVNET ELECTRONICS
CEDAR RAPIDS, IA 52402
TEL:319-393-0303
FAX:913-393-7050

DIGI-KEY
THIEF RIVER FALLS, MN 56701
TEL:218-681-6674
FAX:218-681-3380

FUTURE ELECTRONICS
CEDAR RAPIDS, IA 52402
TEL:319-447-0822
FAX:319-447-9819

MOUSER ELECTRONICS
MANSFIELD, TX 76063
TEL:817-804-3888
FAX:817-804-3899

KENTUCKY

ELECTRO REPS.
12315 HANCOCK STREET
SUITE# 29
CARMEL, INDIANA 46032
TEL:317-569-7202
FAX:317-569-7203

AVNET ELECTRONICS
COLUMBIA, MD 21046
TEL:480-643-8389
FAX:480-643-8768

DIGI-KEY
THIEF RIVER FALLS, MN 56701
TEL:218-681-6674
FAX:218-681-3380

MOUSER ELECTRONICS
BUDD LAKE, NJ 07828
TEL:973-448-0050
FAX:973-448-3753

MAINE

GERBER SALES
330 BOSTON ROAD
BILLERICA, MA:01862
TEL:978-663-1435
FAX:978-663-1445

ARROW ELECTRONICS
WILMINGTON, MA 01887
TEL:800-444-0050
FAX:978-694-6671

AVNET ELECTRONICS
PEABODY, MA 01960
TEL:800-665-2895
FAX:800-447-0602

DIGI-KEY
THIEF RIVER FALLS, MN 56701
TEL:218-681-6674
FAX:218-681-3380

EDGE ELECTRONICS
WOBURN, MA 01801
TEL:781-376-1551
FAX:781-376-0104

FUTURE ELECTRONICS
BOLTON, MA 01740
TEL:978-779-3000
FAX:978-779-3050

MOUSER ELECTRONICS
MANSFIELD, TX 76063
TEL:817-804-3888
FAX:817-804-3899

MARYLAND

STRATEGIC SALES
10805 BEECH CREEK DRIVE
COLUMBIA, MD 21044
TEL:410-964-0097
FAX:877-454-5198

ARROW ELECTRONICS
COLUMBIA, MD 21046
TEL:410-309-0686
FAX:410-309-0699

AVNET ELECTRONICS
COLUMBIA, MD 21046
TEL:480-643-8389
FAX:480-643-8768

DIGI-KEY
THIEF RIVER FALLS, MN 56701
TEL:218-681-6674
FAX:218-681-3380

FUTURE ELECTRONICS
LINTHICUM, MD 20701
TEL:410-314-1111
FAX:410-314-1110

MOUSER ELECTRONICS
MANSFIELD, TX 76063
TEL:817-804-3888
FAX:817-804-3899

MASSACHUSETTS

GERBER SALES
330 BOSTON ROAD
BILLERICA, MA:01862
TEL:978-663-1435
FAX:978-663-1445

ARROW ELECTRONICS
WILMINGTON, MA 01887
TEL:800-444-0050
FAX:978-694-6671

AVNET ELECTRONICS
PEABODY, MA 01960
TEL:800-665-2895
FAX:800-447-0602

DIGI-KEY
THIEF RIVER FALLS, MN 56701
TEL:218-681-6674
FAX:218-681-3380

EDGE ELECTRONICS
WOBURN, MA 01801
TEL:781-376-1551
FAX:781-376-0104

FUTURE ELECTRONICS
BOLTON, MA 01740
TEL:978-779-3000
FAX:978-779-3050

MOUSER ELECTRONICS
MANSFIELD, TX 76063
TEL:817-804-3888
FAX:817-804-3899

MICHIGAN

SELECTED TECHNOLOGIES (WEST)
5301 SAND DRIVE
WEST OLIVE, MI:49460
TEL:616-399-2362
FAX:616-399-2459

SELECTED TECHNOLOGIES (EAST)
10180 HONEYCOMB COURT
PINCKNEY, MI 48169
TEL:1-734-878-6293
CELL:810-423-5635

ARROW ELECTRONICS
PLYMOUTH, MI 48170
TEL:734-455-0850
FAX:734-455-6656

AVNET ELECTRONICS
PLYMOUTH, MI 48170
TEL:734-416-5800
FAX:734-416-4106

DIGI-KEY
THIEF RIVER FALLS, MN 56701
TEL:218-681-6674
FAX:218-681-3380

FUTURE ELECTRONICS
FARMINGTON HILLS, MI 48331
TEL:248-489-1179
FAX:248-489-1030

Distributors and Representatives in The World

FUTURE ELECTRONICS
GRAND RAPIDS, MI 49512
TEL:616-698-6800
FAX:616-698-2155

MOUSER ELECTRONICS
MANSFIELD, TX 76063
TEL:817-804-3888
FAX:817-804-3899

MINNESOTA

JOHNSON COMPANY
1775 OLD HIGHWAY 8 SUITE 110
NEW BRIGHTON, MN 55112
TEL:651-429-2544
FAX:651-429-3104

ARROW ELECTRONICS
EDEN PRARIE, MN 55344
TEL:952-828-5350
FAX:952-828-5399

AVNET ELECTRONICS
BLOOMINGTON, MN 55431
TEL:952-346-3000
FAX:952-881-9461

DIGI-KEY CORPORATION
THIEF RIVER FALLS, MN 56701-0677
TEL:218-681-6674
FAX:218-681-3380

FUTURE ELECTRONICS
CHANHASSEN, MN 55317
TEL:952-934-9100
FAX:952-934-6700

MOUSER ELECTRONICS
MANSFIELD, TX 76063
TEL:817-804-3888
FAX:817-804-3899

MISSISSIPPI

REP INC
SATELLITE OFFICE
1174 MARTINGALE DRIVE
JACKSON, MS 39206
TEL:601-540-5447
FAX:256-881-8270

ARROW ELECTRONICS
HUNTSVILLE, AL 35805
TEL:256-864-3300
FAX:256-864-3349

AVNET ELECTRONICS
HUNTCVILLE, AL 35805
TEL:256-837-8700

FUTURE ELECTRONICS
HUNTSVILLE, AL 35805
TEL:256-532-2200
FAX:256-532-2210

DIGI-KEY
THIEF RIVER FALLS, MN 56701
TEL 218-681-6674
FAX 218-681-3380

MOUSER ELECTRONICS
MANSFIELD, TX 76063
TEL:817-804-3888
FAX:817-804-3899

NEVADA (NORTH)

EWING-FOLEY,
INC (SACRAMENTO, CA)
13620 LINCOLN WAY, SUITE 100
AUBURN, CA 95603
TEL:530-885-6591
FAX:530-885-6594

ARROW ELECTRONICS
ROSEVILLE, CA 95661
TEL:916-797-3200
FAX:916-772-4220

AVNET ELECTRONICS
ROCKLIN, CA 95765
TEL:916-632-2500

DIGI-KEY
THIEF RIVER FALLS, MN 56701
TEL:218-681-6674
FAX:218-681-3380

FUTURE ELECTRONICS
RENO, NV 89502
TEL:775-826-2500

MOUSER ELECTRONICS
BUDD LAKE, NJ 07828
TEL:973-448-0050
FAX:973-448-3753

WALKER COMPONENT GROUP
SACRAMENTO, CA 95827
TEL:916-363-6030
FAX:916-362-6926

NEVADA (SOUTH)

REPTRONIX, LTD.,
2223 S. 48TH STREET
TEMPE, AZ 85282
ATTN:ART SCARLA
TEL:602-230-2630
FAX:602-431-1087

ARROW ELECTRONICS
TEMPE, AZ 85281
TEL:602-966-6600
FAX:602-966-4826

FUTURE ELECTRONICS
RENO, NV 89502
TEL:775-826-2500
FAX:775-826-2664

DIGI-KEY
THIEF RIVER FALLS, MN 56701
TEL:218-681-6674
FAX:218-681-3380

MOUSER ELECTRONICS
MANSFIELD, TX 76063
TEL:817-804-3888
FAX:817-804-3899

NEW HAMPSHIRE

GERBER SALES
330 BOSTON ROAD
BILLERICA, MA 01862
TEL:978-663-1435
FAX:978-663-1445

ARROW ELECTRONICS
WILMINGTON, MA 01887-1018
TEL:978-658-7920
FAX:978-661-6595

AVNET ELECTRONICS
PEABODY, MA 01960
TEL:978-532-9700

BREVAN ELECTRONICS
MERRIMACK, NH 03054
TEL:603-429-1900
FAX:603-429-1001

DIGI-KEY
THIEF RIVER FALLS, MN 56701
TEL:218-681-6674
FAX:218-681-3380

MOUSER ELECTRONICS
MANSFIELD, TX 76063
TEL:817-804-3888
FAX:817-804-3899

NEW JERSEY (LOWER)

ASTROREP MID ATLANTIC, INC.
65 W, STREET ROAD, SUITE B203
WARMINSTER, PA 18974
TEL:215-957-9580
FAX:215-957-9583

AVNET ELECTRONICS
7000 ATRIUM WY. STE6
MT. LAUREL, NJ 08054
TEL:800-526-4812
FAX:856-222-6464

DIGI-KEY
701 BROOKS AVENUE SOUTH
THIEF RIVER FALLS, MN 56701
TEL:218-681-6674
FAX:218-681-3380

FUTURE ELECTRONICS
2000 CRAWFORD PLACE SUITE 900 MT. LAURAL, NJ 08054
TEL:856-787-9601
FAX:856-787-9616

Distributors and Representatives in The World

MOUSER ELECTRONICS
BUDD LAKE, NJ 07828
TEL:973-448-0050
FAX:973-448-3753

NEW JERSEY (UPPER)

METROLOGIC
271 ROUTE 46 WEST
SUITE D202
FAIRFIELD, NJ 07004
TEL:973-575-5585
FAX:973-575-8023

ARROW ELECTRONICS
PINEBROOK, NJ 07058
TEL:973-882-8358
FAX:973-882-9109

AVNET ELECTRONICS
PARSIPPANY, NJ 07054
TEL:973-515-1641
FAX:973-515-1600

EDGE ELECTRONICS
HEWITT, NJ 07421
TEL:973-632-6932
FAX:631-471-3405

DIGI-KEY
THIEF RIVER FALLS, MN 56701
TEL:218-681-6674
FAX:218-681-3380

MOUSER ELECTRONICS
MANSFIELD, TX 76063
TEL:817-804-3888
FAX:817-804-3899

NEW MEXICO

REPTRONIX
237-C EUBANK BLVD., N.E.
ALBUQUERQUE, NM 87123
TEL:505-292-1718
FAX:505-299-1611

ARROW ELECTRONICS
ALBUQUERQUE, NM 87112
TEL:505-480-6212
FAX:505-480-6212

AVNET ELECTRONICS
ALBUQUERQUE, NM 87113
TEL:505-293-5119
FAX:505-934-0146

DIGI-KEY
THIEF RIVER FALLS, MN 56701
TEL:218-681-6674
FAX:218-681-3380

MOUSER ELECTRONICS
MANSFIELD, TX 76063
TEL:817-804-3888
FAX:817-804-3899

NEW YORK (LOWER)

METROLOGIC
271 ROUTE 46 WEST
SUITE D202
FAIRFIELD, NJ 07004
TEL:973-575-5585
FAX:973-575-8023

ARROW ELECTRONICS
WHIPPANY, NJ 07981-1027
TEL:973-265-3820
FAX:973-265-3825

AVNET ELECTRONICS
MT. LAUREL, NJ 08054
TEL:800-526-4812
FAX:856-222-6464

DIGI-KEY
THIRF RIVER FALLS, MN 56701
TEL:218-681-6674
FAX:218-681-3380

EDGE ELECTRONICS
BOHEMIA, NY 11716
TEL:800-647-3343
FAX:631-471-3405

FUTURE ELECTRONICS
HAUPPAUGE, NY 11788
TEL:631-348-4000
FAX:631-234-6183

DIGI-KEY
THIEF RIVER FALLS, MN 56701
TEL:218-681-6674
FAX:218-681-3380

MOUSER ELECTRONICS
MANSFIELD, TX 76063
TEL:817-804-3888
FAX:817-804-3899

NEW YORK (UPSTATE)

HARMON & SULLIVAN ASSOCIATES INC
1490 CHILI AVE ROCHESTER,
NY 1462A
TEL:585-235-3030
FAX:585-464-8191

ARROW ELECTRONICS
ROCHESTER, NY 14623
TEL:800-462-6422
FAX:585-427-0735

ARROW ELECTRONICS
ROCHESTER, NY 14623
TEL:585-350-2800
FAX:585-350-2850

ARROW ELECTRONICS
SYRACUSE, NY 13214
TEL:315-233-5600
FAX:315-449-9038

ARROW ELECTRONICS
VESTAL, NY 13850
TEL:800-678-0010
FAX:607-785-5546

DIGI-KEY
THIEF RIVER FALLS, MN 56701
TEL:218-681-6674
FAX:218-681-3380

FUTURE ELECTRONICS
SYRACUSE, NY 13212
TEL:315-451-2371
FAX:315-451-7258

ROCHESTER, NY 14625
TEL:585-387-9550
FAX:585-387-9563

MOUSER ELECTRONICS
MANSFIELD, TX 76063
TEL:817-804-3888
FAX:817-804-3899

NORTH CAROLINA

REP INC
2500 GATEWAY CENTRE BLVD
#400
MORRISVILLE, NC 27560
TEL:919-606-7728
FAX:256-881-6692

REP INC
6425 CREFT CIRCLE
INDIAN TRAIL, NC 28079
TEL:704-905-7846
FAX:256-881-6692

ARROW ELECTRONICS
RALEIGH, NC 27609
TEL:919-876-3132
FAX:919-878-9517

AVNET ELECTRONICS
RALEIGH, NC 27606
TEL:919-859-9159
FAX:919-859-3225

DIGI-KEY
THIEF RIVER FALLS, MN 56701
TEL:218-681-6674
FAX:218-681-3380

FUTURE ELECTRONICS
RALEIGH, NC 27616
FAX:919-790-7111

MOUSER ELECTRONICS
MANSFIELD, TX 76063
TEL:817-804-3888
FAX:817-804-3899

NORTH DAKOTA

JOHNSON COMPANY
1775 OLD HIGHWAY 8 SUITE 110
NEW BRIGHTON, MN 55112
TEL:651-429-2544
FAX:651-429-3104

Distributors and Representatives in The World

ARROW ELECTRONICS
EDEN PRAIRIE, MN 55344
TEL:952-828-5300
FAX:952- 828-5415

AVNET ELECTRONICS
BLOOMINGTON, MN 55431
TEL:952-346-3000
FAX:952-881-9461

DIGI-KEY CORPORATION
THIEF RIVER FALLS,
MN 5671-0677
TEL:218-681-6674
FAX:218-681-3380

FUTURE ELECTRONICS
CHANHASSEN, MN 55317
TEL:952-934-9100
FAX:952-934-6700

MOUSER ELECTRONICS
MANSFIELD, TX 76063
TEL:817-804-3888
FAX:817-804-3899

OHIO

ELECTRO REPS, INC. (CLEVELAND)
6985 WOODLANDS LANE
CLEVELAND, OH 44139
TEL:440-519-9902
FAX:440-519-9903

ELECTRO REPS, INC. (CINCINNATI)
3989 US ROUTE 42
LEBANON, OH 45036
TEL:513-398-6569
FAX:513-398-9280

ARROW ELECTRONICS
DAYTON, OH 45458
TEL:937-428-7319
FAX:937-428-7345

ARROW ELECTRONICS
SOLON, OH 44139
TEL:440-519-7422
FAX:440-248-5490

AVNET ELECTRONICS
SOLON, OH 44139
TEL:440-349-7600
FAX:440-248-4803

DIGI-KEY
THIEF RIVER FALLS, MN 56701
TEL:218-681-6674
FAX:218-681-3380

FUTURE ELECTRONICS
SOLON, OH 44139
TEL:800-515-0090
FAX:937-426-8490

FUTURE ELECTRONICS
BEAVERCREEK, OH 45430
TEL:937-426-6090
FAX:937-426-8490

MOUSER ELECTRONICS
MANSFIELD, TX 76063
TEL:817-804-3888
FAX:817-804-3899

OKLAHOMA

RAM ELECTRONIC SALES
16901 NORTH DALLAS PARKWAY
#210
ADDISON, TX 75001
TEL:469-533-2610
FAX:469-533-2611

ARROW ELECTRONICS
TULSA, OK 74146
TEL:918-252-7537
FAX:918-254-1687

AVNET ELECTRONICS
TULSA, OK 74146
TEL:918-459-6000
FAX:918-459-6060

DIGI-KEY
THIEF RIVER FALLS, MN 56701
TEL:218-681-6674
FAX:218-681-3380

MOUSER ELECTRONICS
MANSFIELD, TX 76063
TEL:817-804-3888
FAX:817-804-3899

FUTURE ELECTRONICS
TULSA, OK 74136
TEL:918-492-1500
FAX:918-492-4848

OREGON

ECS
128 N.SHORE CIRCLE
LAKE OSWEGO, OR:97034
TEL:503-245-2342

ARROW ELECTRONICS
BEAVERTON, OR 97005
TEL:503-629-8090
FAX:503-645-0611

AVNET ELECTRONICS
BEAVERTON, OR 97006
TEL:503-526-6200
FAX:503-641-5939

DIGI-KEY
THIEF RIVER FALLS, MN 56701
TEL:218-681-6674
FAX:218-681-3380

FUTURE ELECTRONICS
PORTLAND, OR:97224
TEL:503-603-0956
FAX:503-603-0859

MOUSER ELECTRONICS
MANSFIELD, TX 76063
TEL:817-804-3888
FAX:817-804-3899

WALKER COMPONENT GROUP
BEAVERTON, OR 97005
TEL:503-641-1690
FAX:503-646-3737

PENNSYLVANIA (EASTERN)

ASTROREP MID ATLANTIC, INC.
65 W, STREET ROAD, SUITE B203
WARMINSTER, PA 18974
TEL:215-957-9580
FAX:215-957-9583

ARROW ELECTRONICS
HORSHAM, PA 19044
TEL:215-443-5150
FAX:215-672-2919

FUTURE ELECTRONICS
MT. LAURAL, PA 19044
TEL:800-285-8873
FAX:856-787-9616

DIGI-KEY
THIEF RIVER FALLS, MN 56701
TEL:218-681-6674
FAX:218-681-3380

MOUSER ELECTRONICS
MANSFIELD, TX 76063
TEL:817-804-3888
FAX:817-804-3899

PENNSYLVANIA (WESTERN)

ELECTRO REPS, INC.
512 DAISY COURT
PITTSBURGH, PA 16066
TEL:724-778-0200
FAX:724-778-0204
Cell:724-584-0200

ARROW ELECTRONICS
PITTSBURGH, PA 15239
TEL:724-327-1130
FAX:724-327-4181

FUTURE ELECTRONICS
WEXFORD, PA 15090
TEL:888-214-4101
FAX:724-935-1188

DIGI-KEY
THIEF RIVER FALLS, MN 56701
TEL:218-681-6674
FAX:218-681-3380

Distributors and Representatives in The World

MOUSER ELECTRONICS
MANSFIELD, TX 76063
TEL:817-804-3888
FAX:817-804-3899

RHODE ISLAND

GERBER SALES
330 BOSTON ROAD
BILLERICA, MA:01862
TEL:978-663-1435
FAX:978-663-1445

ARROW ELECTRONICS
WILMINGTON, MA 01887-1018
TEL:978-658-7920
FAX:978-661-6595

AVNET ELECTRONICS
PEABODY, MA 01960
TEL:978-532-9700

FUTURE ELECTRONICS
BOLTON, MA 01740
TEL:978-779-3111
FAX:978-779-3199

DIGI-KEY
THIEF RIVER FALLS, MN 56701
TEL:218-681-6674
FAX:218-681-3380

MOUSER ELECTRONICS
MANSFIELD, TX 76063
TEL:817-804-3888
FAX:817-804-3899

SOUTH CAROLINA

REP INC
2500 GATEWAY CENTRE BLVD
#400
MORRISVILLE, NC 27560
TEL:919-606-7728
FAX:256-881-6692

ARROW ELECTRONICS
RALEIGH, NC 27609
TEL:919-876-3132
FAX:919-878-9517

AVNET ELECTRONICS
RALEIGH, NC 27606
TEL:919-859-9159
FAX:919-859-3225

DIGI-KEY
THIEF RIVER FALLS, MN 56701
TEL:218-681-6674
FAX:218-681-3380

FUTURE ELECTRONICS
RALEIGH, NC 27616
FAX:919-790-7111

MOUSER ELECTRONICS
MANSFIELD, TX 76063
TEL:817-804-3888
FAX:817-804-3899

SOUTH DAKOTA

JOHNSON COMPANY
1775 OLD HIGHWAY 8 SUITE 110
NEW BRIGHTON, MN 55112
TEL:651-429-2544
FAX:651-429-3104

ARROW ELECTRONICS
EDEN PRAIRIE, MN 55344
TEL:952-828-5300
FAX:952-828-5415

EDEN PRARIE, MN 55344
TEL:952-828-5350
FAX:952-828-5399

AVNET ELECTRONICS
BLOOMINGTON, MN 55431
TEL:952-346-3000
FAX:952-881-9461

FUTURE ELECTRONICS
CHANHASSEN, MN 55317
TEL:952-934-9100
FAX:952-934-6700

DIGI-KEY CORPORATION
THIEF RIVER FALLS, MN
56701-0677
TEL:218-681-6674
FAX:218-681-3380

MOUSER ELECTRONICS
MANSFIELD, TX 76063
TEL:817-804-3888
FAX:817-804-3899

TEXAS

RAM ELECTRONIC
SALES - DALLAS
16901 NORTH DALLAS PARKWAY
#210
ADDISON, TX 75001
TEL:469-533-2610
FAX:469-533-2611

RAM ELECTRONIC
SALES - HOUSTON
11803 BROOK MEADOW LN
STAFFORD, TX 77477
TEL:832-788-2930
FAX:469-533-2611

RAM ELECTRONIC
SALES - AUSTIN
5318 RIVER PLACE BLVD.
AUSTIN, TX 78730
TEL:512-250-5082
FAX:512-250-0421

ARROW ELECTRONICS
PLANA, TX 75093
TEL:972-380-6464
FAX:972-447-8014

ARROW ELECTRONICS
HOUSTON, TX 77042
TEL:281-647-6868
FAX:281-492-8722

AVNET ELECTRONICS
DALLAS, TX 75243
TEL:214-553-4300
FAX:214-553-4395

AVNET ELECTRONICS
HOUSTON, TX 77027-7298
TEL:713-627-9800
FAX:713-629-3939

AVNET ELECTRONICS
AUSTIN, TX 78727
TEL:512-219-3700
FAX:512-219-3737

OMNI PRO ELECTRONICS
CARROLLTON, TX 75006
TEL:972-713-9000
FAX:972-713-6032

DIGI-KEY
THIEF RIVER FALLS, MN 56701
TEL:218-681-6674
FAX:218-681-3380

EDGE ELECTRONICS
CARROLLTON, TX 75007
TEL:972-323-7977
FAX:972-323-8530

FUTURE ELECTRONICS
HOUSTON, TX 77042
TEL:713-785-1155
FAX:713-785-4558

FUTURE ELECTRONICS
PLANO TX 75075
TEL:469-467-0080
FAX:469-467-0078

FUTURE ELECTRONICS
GREYSTONE PLAZA
AUSTIN, TX 78731
TEL:512-502-0991
FAX:512-502-0740

MOUSER ELECTRONICS
MANSFIELD, TX 76063
TEL:817-804-3888
FAX:817-804-3899

TEXAS - EL PASO

BORDER GROUP
819 SUNSET RD.
EL PASO, TX 79922
TEL:915-581-7920
FAX:915-585-1886

ARROW ELECTRONICS
EL PASO, TX 79922
TEL:915-834-6100
FAX:915-834-6101

Distributors and Representatives in The World

AVNET ELECTRONICS
EL PASO, TX 79906
TEL:915-772-3304
FAX:915-772-3304

DIGI-KEY
THIEF RIVER FALLS, MN 56701
TEL:218-681-6674
FAX:218-681-3380

FUTURE ELECTRONICS
EL PASO, TX 79935
TEL:915-592-3565
FAX:915-592-3838

MOUSER ELECTRONICS
MANSFIELD, TX 76063
TEL:817-804-3888
FAX:817-804-3899

TENNESSEE

REP INC
CORPORATE OFFICE
11535 GILLELAND ROAD
HUNTSVILLE, AL 35803
TEL:256-881-9270
FAX:256-882-6692

ARROW ELECTRONICS
HUNTSVILLE, AL 35805
TEL:256-864-3300
FAX:256-864-3349

AVNET ELECTRONICS
HUNTCVILLE, AL 35805
TEL:256-837-8700

FUTURE ELECTRONICS
HUNTSVILLE, AL 35805
TEL:256-532-2200
FAX:256-532-2210

DIGI-KEY
THIEF RIVER FALLS, MN 56701
TEL:218-681-6674
FAX:218-681-3380

MOUSER ELECTRONICS
MANSFIELD, TX 76063
TEL:817-804-3888
FAX:817-804-3899

UTAH

ENGLISH DAMCO SALES
753 W. POTOMAC DR.
MURRAY, UT 84123
TEL:801-281-8626
FAX:801-281-8628

ARROW ELECTRONICS
SALT LAKE CITY, UT 84119
TEL:801-973-8555
FAX:801-973-8909

AVNET ELECTRONICS
SALT LAKE CITY, UT 84121
TEL:801-365-3800
FAX:801-365-3821

DIGI-KEY
THIEF RIVER FALLS, MN 56701
TEL:218-681-6674
FAX:218-681-3380

FUTURE ELECTRONICS
SALT LAKE CITY, UT 84106
TEL:801-467-4448
FAX:801-467-3604

MOUSER ELECTRONICS
MANSFIELD, TX 76063
TEL:817-804-3888
FAX:817-804-3899

WALKER COMPONENT GROUP
WEST VALLEY CITY, UT 84120
TEL:801-977-9750
FAX:801-975-1207

VERMONT

GERBER SALES
330 BOSTON ROAD
BILLERICA, MA:01862
TEL:978-663-1435
FAX:978-663-1445

ARROW ELECTRONICS
WILMINGTON, MA 01887-1018
FAX:978-658-7920
FAX:978-661-6595

AVNET ELECTRONICS
PEABODY, MA 01960
TEL:978-532-9700

DIGI-KEY
THIEF RIVER FALLS, MN 56701
TEL:218-681-6674
FAX:218-681-3380

FUTURE ELECTRONICS
BOLTON, MA 01740
TEL:978-779-3111
FAX:978-779-3199

MOUSER ELECTRONICS
MANSFIELD, TX 76063
TEL:817-804-3888
FAX:817-804-3899

VIRGINIA

STRATEGIC SALES
10805 BEECH CREEK DRIVE
COLUMBIA, MD 21044
TEL:410-964-0097
FAX:877-454-5198

ARROW ELECTRONICS
PITTSBURG, PA 15239-2909
TEL:724-327-1130
FAX:724-327-4181

AVNET ELECTRONICS
MT. LAUREL, NJ 08054
TEL:856-222-6400

DIGI-KEY
THIEF RIVER FALLS, MN 56701
TEL:218-681-6674
FAX:218-681-3380

FUTURE ELECTRONICS
WEXFORD,PA 15090
TEL:724-935-9600
FAX:724-935-1188

MOUSER ELECTRONICS
BUDD LAKE, NJ 07828
TEL:973-448-0050
FAX:973-448-3753

WASHINGTON

ECS
1000, 5th AVENUE N.W., SUITE A
ISSAQUAH, WA 98027-2409
TEL:425-369-0993
FAX:425-369-0988
http://www.ecsrep.com

ARROW ELECTRONICS
BELLEVUE, WA 98004
TEL:425-643-9992
FAX:425-643-9709

AVNET ELECTRONICS
REDMOND, WA 98052
TEL:425-882-7000
FAX:425-882-7070

DIGI-KEY
THIEF RIVER FALLS, MN 56701
TEL:218-681-6674
FAX:218-681-3380

WALKER COMPONENT GROUP
BEAVERTON, OR 97005
TEL:800-666-1690
FAX:503-646-3737

FUTURE ELECTRONICS
BOTHELL, WA 98021
TEL:206-489-3400
FAX:206-489-3411

MOUSER ELECTRONICS
MANSFIELD, TX 76063
TEL:817-804-3888
FAX:817-804-3899

Distributors and Representatives in The World

WASHINGTON D.C.

STRATEGIC SALES
10805 BEECH CREEK DRIVE
COLUMBIA, MD 21044
TEL:410-964-0097
FAX:877-454-5198

ARROW ELECTRONICS
COLUMBIA, MD 21046
TEL:410-309-0686
FAX:410-309-0699

AVNET ELECTRONICS
COLU,BIA, MS 21046
TEL:410-720-3400

DIGI-KEY
THIEF RIVER FALLS, MN 56701
TEL:218-681-6674
FAX:218-681-3380

FUTURE ELECTRONICS
LINTHICUM, MD 21090
TEL:410-859-1720
FAX:410-684-3291

MOUSER ELECTRONICS
MANSFIELD, TX 76063
TEL:817-804-3888
FAX:817-804-3899

WEST VIRGINIA

ELECTRO REPS, INC.
512 DAISY COURT
PITTSBURGH, PA 16066
TEL:724-778-0200
FAX:724-778-0204

ARROW ELECTRONICS
PITTSBURG, PA 15239
TEL:724-327-1130
FAX:724-327-4181

AVNET ELECTRONICS
MT. LAUREL, NJ 08054
TEL:856-222-6400

DIGI-KEY
THIEF RIVER FALLS, MN 56701
TEL:218-681-6674
FAX:218-681-3380

FUTURE ELECTRONICS
WEXFORD,PA 15090
TEL:724-935-9600
FAX:724-935-1188

MOUSER ELECTRONICS
MANSFIELD, TX 76063
TEL:817-804-3888
FAX:817-804-3899

WISCONSIN

SUMER, INC.
1675 HICKS ROAD
ROLLING MEADOWS, IL 60008
TEL:847-991-8500
FAX:847-991-0474

AVNET ELECTRONICS
PEWAUKEE, WI 53072
TEL:262-513-1500

DIGI-KEY
THIEF RIVER FALLS, MN 56701
TEL:218-681-6674
FAX:218-681-3380

ARROW ELECTRONICS
ITASCA, IL 60143-2062
TEL:630-250-0500
FAX:630-250-0916

FUTURE ELECTRONICS
BROOKFIELD , WI 53045
TEL:262-879-0244
FAX:262-879-0250

MOUSER ELECTRONICS
MANSFIELD, TX 76063
TEL:817-804-3888
FAX:817-804-3899

WISCONSIN - FAR WESTERN (EAU CLAIRE COUNTY)

JOHNSON COMPANY
1775 OLD HIGHWAY 8 STE 110
NEW BRIGHTON, MN 55112
TEL:651-429-2544
FAX:651-429-3104

ARROW ELECTRONICS
EDEN PRAIRIE, MN 55344
TEL:952-828-5350
FAX:952-828-5399

AVNET ELECTRONICS
BLLOOMINGTON, MN 55431
TEL:952-346-3000

DIGI-KEY
THIEF RIVER FALLS, MN 56701
TEL:218-681-6674
FAX:218-681-3380

FUTURE ELECTRONICS
MINNETONKA, MN 55343-7382
TEL:952-852-0032
FAX:952-294-0414

MOUSER ELECTRONICS
MANSFIELD, TX 76063
TEL:817-804-3888
FAX:817-804-3899

BRAZIL

TRADECOMP
RUA SAN SAO ALVES DOS SANTOS
433 CJM.61-CEP 04571-090
SAO PAULO, SP, BRAZIL 04571-090
TEL:011 55 11 5507 2627
FAX:011 55 11 5507 7905

AVNET ELECTRONICS
SAO PAULO, SP BRAZIL
TEL:55 11 507 921 50
FAX:55 11 507 921 60

FUTURE ELECTRONICS
CAMPINAS, SP BRAZIL
TEL:55 19 3737-4126
FAX:55 19 3236-9834

ARROW ELECTRONICS
BARRA FUNDA, SP, BRAZIL
TEL:11 3613-9300
FAX:11 3613-9355

ARGENTINA

TRADECOMP
RUA SAN SAO ALVES DOS SANTOS
433 CJM.61-CEP 04571-090
SAO PAULO, SP, BRAZIL 04571-090
BRAZIL
TEL:011 55 11 5507 2627
FAX:011 55 11 5507 7905

CANADA (EASTERN) (TORONTO)

DESIGNTRONICS
164 SANDLE WOOD PRKWY EAST
UNIT 211
BRAMPTON, ONTARIO:L6Z 4X1
TEL:905-457-0981
FAX:514-695-582316

DESIGNTRONICS
5, GOODFELLOW CR.
BOLTON, ONTARIO L7E-5Z4
TEL:905-457-0981
FAX:514-695-5823

ARROW ELECTRONICS
MISSISSAUGA, ONTARIO L5T 2L6
TEL:800-235-3497
TEL:905-670-7769
FAX:905-670-7781

AVNET ELECTRONICS
MISSISSAUGA, ON L5N 5M4
TEL:905-812-4400
FAX:905-812-4459

ELECTROSONIC
TORONTO, ONTARIO M2H 3B3
TEL:416-494-1666
FAX:416-496-3030

Distributors and Representatives in The World

FUTURE ELECTRONICS
MISSISSAUGA, ONTARIO L4V 1W5
TEL:905-624-1125
FAX:905-624-1124

(QUEBEC CITY)

DESIGNTRONICS
112, LAUREL
BAIE D' URFE, QUEBEC H9X 2G3
TEL:514-695-3124
FAX:514-695-5823

FUTURE ELECTRONICS
QUEBEC, QUEBEC G2C 5G5
TEL:418-877-6666
FAX:418-877-6671

ELECTROSONIC
QUEBEC, QUEBEC G2E 5B7
TEL:418-877-6859
FAX:418-877-6304

(OTTAWA)

DESIGNTRONICS
112, LAURE
BAIE D' URFE. QUEBEC H9X 2G3
TEL:514-695-3124
FAX:514-695-5823

ARROW ELECTRONICS
ONTARIO, CANADA K2K 2MS
TEL:613-271-8200
FAX:613-271-8203

AVNET ELECTRONICS
NEPEAN, ONTARIO K2E 7J5
TEL:613-226-1700
FAX:613-226-1184

ELECTROSONIC
OTTAWA, ONTARIO K1Z 8N8
TEL:613-728-8333
FAX:613-728-2263

FUTURE ELECTRONICS
OTTAWA, ONTARIO K2C 2B5
TEL:613-727-1800
FAX:613-727-9819

CANADA (WESTERN)

DAVETEK MARKETING, INC.
105A 8988 FRASERTON COURT
BURNABY, B.C. V5J 5H8
TEL:604-430-3680
FAX:604-435-5490

FOR SERVICES IN ALBERTA, SASKATCHEWAN & MANITOBA:
DAVETEK MARKETING, INC.
3116 4TH STREET NORTHWEST
STE 101
CALGARY, ALBERTA T2M 3A4
TEL:403-283-3577
FAX:403-283-3588

ARROW ELECTRONICS
CALGARY, ALBERTA T1Y 7G3
TEL:403-735-2800
FAX:403-735-2803

AVNET ELECTRONICS
CALGARY, ALBERTA T1Y 5Z6
TEL:403-291-5510
FAX:403-291-0030

ELECTROSONIC
RICHMOND, BC V6V 2N2
TEL:604-273-2911
FAX:604-273-7360

CALGARY, ALBERTA T2H 0M6
TEL:403-255-9550
FAX:403-255-0449

WINNIPEG, MANITOBA R3J 3T7
TEL:204-783-3105
FAX:204-774-7288

EDMONTON, ALBERTA T6E 6G4
TEL:780-413-0859
FAX:780-413-0992

FUTURE ELECTRONICS
CALGARY, ALBERTA T2E 6Y7
TEL:403-219-3443
FAX:403-291-7054

VANCOUVER, BC V5M 1C2
TEL:604-294-1166
FAX:604-294-1206

MEXICO - JALISCO

PHOENIX REP SALES
TAPALPA #2
COL VALLARTA PONIENTE
CP 441100
GUADALAJARA, JALISCO, MEXICO
TEL:011-523-33-123-9199
FAX:011-523-33-123-9198

ARROW ELECTRONICS
ZAPOPAN, JALISCO 45150
TEL:011-52-333-120-2600
FAX:011-52-333-833-2291

AVNET ELECTRONICS
TLAQUEPAQUE, JALISCO 45080
TEL:011-52-333-134-2300
FAX:011-52-333-133-1788

MEXICO - JUAREZ

BORDER GROUP
819 SUNSET RD.
EL PASO, TX 79922
TEL:915-581-7920
FAX:915-585-1886

FUTURE ELECTRONICS
ZAPOPAN, JALISCO 45050
TEL :011-52-333-122-0043
TEL :011-52-333-122-6610

MEXICO - NEUVO LEON

PHOENIX REP SALES
TAPALPA #2
COL VALLARTA PONIENTE
CP 441100 GUADALAJARA,
JALISCO, MEXICO
TEL:011-523-33-123-9199
FAX:011-523-33-123-9198

MEXICO - NOGALES

REPTRONIX, LTD.
2223 S. 48TH STREET
TEMPE, AZ 85282
TEL:602-230-2630
FAX:602-431-1087

MEXICO - TEXAS BORDER

RAM ELECTRONIC SALES
121 EAST NYSSA AVE
MC ALLEN, TX 78501
TEL:956-605-0182
FAX:469-533-2611

MEXICO - TIJUANA

WEST ELECTRONIC SALES
5355 AVENIDA ENCINAS, STE 207
CARLSBAD, CA 92008
TEL:760-929-1615
FAX:760-929-1619

Worldwide Contact

HEADQUARTERS

LITE-ON TECHNOLOGY CORP.
90, Chien I Road, Chung Ho
Taipei Hsien, Taiwan, R.O.C.
TEL: +886-2-22226181-8
FAX: +886-2-22211948
E-mail:optoservice@liteon.com.tw
http://www.liteon.com.tw

FACTORY

LITE-ON ELECTRONICS (TIANJIN) CO., LTD.
No. 11 Fu-Yuan Road,
Wuqing Development Area,
Tianjin, China
Post Code: 301700
TEL: +86-22-82193000
FAX: +86-22-82122405

LITE-ON TECHNOLOGY CO., LTD.
(WUXI)
Wuxi-Singapore Industrial Park,
Wuxi, Jiangsu, China
Post Code: 214028
TEL: +86-510-85281527
FAX: +86-510-85282061

LITE-ON ELECTRONICS (THAILAND) CO., LTD.
38/4 Moo 1, Rangsit
Ongkarak Road, Bunyeetoh
Tanyaburi Patthumthani
12130 Bangkok, Thailand
TEL: +662-5331208-16
FAX: +662-5331747

SALES OFFICE

(AMERICA)

LITE-ON INC.
720 S. Hillview Drive.
Milpitas, CA 95035
TEL: +1-408-9464873
FAX: +1-408-9414597
E-mail:optossales@liteon.com
http://www.us.liteon.com

LITE-ON INC. Austin
1826 Kramer Lane, Building A
Suite D
Austin, TX 78758
TEL: +1-512-835-6052
FAX: +1-512-835-4292

LITE-ON INC. Wisconsin
23201-117th Street Trevor,
WI 53179
TEL: +1-262-862-9451
FAX: +1-262-862-9460

(ASIA/PACIFIC)

LITE-ON ELECTRONICS (TIANJIN) CO., LTD.
No. 11 Fu-Yuan Road,
Wuqing Development Area,
Tianjin, China
Post Code: 301700
TEL: +86-22-82193000
FAX: +86-22-82122405

LITE-ON TECHNOLOGY CO., LTD. (WUXI)
NO. 2 Xing Chuang Road 1,
Wuxi Singapore Industrial Park,
Wuxi, Jiangsu, China
Post Code: 214028
TEL: +86-510-85281527
FAX: +86-510-85282061

LITE-ON ELECTRONICS (DONGGUANG) CO., LTD.
NO. 1 Zheng An Road,
Shang Jiao Section
Chang An Town, Dongguang City,
Guangdong, China
Post Code: 523878
TEL: +86-769-86070888
FAX: +86-769-88611028

LITE-ON ELECTRONICS H.K. LTD.
RM 904-905, 9/Fl.,
International Plaza
20 Sheung Yuet Road,
Kowloon Bay, Kowloon H.K.
TEL: +852-27963012-4
FAX: +852-27960044

LITE-ON JAPAN LTD
8F, No. 2 DIC Bldg., 2-16-2
Sotokanda, Chiyoda-Ku,
Tokyo 101-0021 Japan
TEL: +81-3-3258-6502
FAX: +81-3-3258-6505

KOREA
JAY TRONICS INC.
15F, Daerung Technotown 12cha
327-32, Gasan-dong,
Geumcheon-gu, Seoul, Korea
TEL: +82-2-705-4900
FAX: +82-2-2060-3399

LiteOn Singapore Pte Ltd
29 Woodlands Industrial Park E1
#02-03 Northtech
Singapore 757716
TEL: +65-6349 0918
FAX: +65-6349 0910

LITE-ON ELECTRONICS (THAILAND) CO., LTD.
38/4 Moo 1, Rangsit
Ongkarak Road, Bunyeetoh
Tanyaburi Patthumthani
12130 Bangkok, Thailand
TEL: +662-5331208-16
FAX: +662-5330993

(EUROPE)

Lite-On Opto Electronics
Landpoortstraat 6
4797AN Willemstad
The Netherland
TEL: +31 168 358 989 (main)
FAX: +31 168 358 126
E-mail:On-Soo.Dautzenberg@liteonopto.nl

Lite-On (France) SARL
Le Technoparc
3, Rue Gustave Eiffel
F-78306 Poissy Cedex
TEL: +33-1-39 22 63 25
FAX: +33-1-39 22 63 43
E-mail:liteon.france@liteon.fr

Lite-On (Germany) GmbH
Kleine Kuhberg 2-6
24103 Kiel
Germany
TEL: +49-431-670 490
FAX: +49-431-670 4999
E-mail:info@liteon-gmbh.de

Lite-On Italy
Via Ghirlandaio #61
Florence, Italy
50121
TEL: +39 055 662916
FAX: +39 055 664041
E-mail:liteon.italy@liteon.it

LITE-ON Suomi (Finland)
Laitainen 5 B 13
20900 Turku
TEL: +358 2 2580050
FAX: +358 2 2580052
E-mail:Info@liteon.fi

Lite-On Electronics (Europe) Ltd
Teteringsedijk 20a
4817MG Breda
Netherlands
TEL: +31-765-301-946
FAX: +31-765-301-949
E-mail:on-soo.dautzenberg@liteonopto.nl

www.liteon.com