wieland

Headquarters:
Wieland Electric GmbH
Brennerstraße 10 – 14
D-96052 Bamberg

Sales and Marketing Center:
Wieland Electric GmbH
Benzstraße 9
D-96052 Bamberg

Phone +49 (0951) 9324-0
Fax +49 (0951) 9324-198
www.wieland-electric.com
www.gesis.com
info@wieland-electric.com

contacts are green.

Industrial technology

Solutions for the control cabinet
- DIN rail terminal blocks
  - Screw, spring clamp or IDC connection technology
  - Wire cross sections up to 240 mm²
  - Numerous special functions
  - Software solutions interfacing to CAE systems
- Safety
  - Safety sensors
  - Safety relays
  - Modular safety systems with fieldbus link
- PLC and fieldbus components
  - Standard applications in IP 20
  - Increased environmental conditions with railroad and ship approvals
- Interface
  - Coupling relays, semiconductor switches
  - Measuring and monitoring relays
  - Timer and switching relays
  - Analog modules
  - Passive interfaces
  - Power supply units
  - Overvoltage protection

Solutions for field applications
- Remote automation technology
  - Power distribution
  - Fieldbus interfaces and motor starters
- Connectors for industrial applications
  - Square and round connectors
  - Aluminum or plastic housings
  - Degree of protection up to IP 68
  - Current-carrying capacity up to 100 A
  - Connectors for hazardous areas
  - Modular, application specific technology

PC board terminals and connectors
- Screw or spring clamp connection technology
- Spacings: 3.5 mm to 10.16 mm
- Reflow or wave soldering process

Building and installation technology

- Building installation systems
  - Main power supply connectors IP 20/IP 65 ... IP 68
  - Bus connectors
  - Combined connectors
  - Low-voltage connectors
  - Power distribution system with flat cables
  - Distribution systems
  - Bus systems in KNX, LON and radio technology
  - DIN rail terminal blocks for electrical installations
  - Overvoltage protection

Product Range

0124.0 C 11/10

fasis
fasis

wieland

fasis

DIN Rail Terminal Blocks with Tension Spring Connection

A Touch of Spring in Installation

▲ Sales and Marketing Center in Bamberg

▲ The Bamberg headquarters

▲ STOCKO headquarters in Wuppertal

wieland group

automation
building
electronics

ACTIVE WORLDWIDE

With its staff of almost 2,000 employees, the Wieland Group is at home on all continents. Subsidiaries in Great Britain, France, Spain, Italy, Poland, Canada, the USA, China and Denmark speak for themselves. With a great number of representatives, Wieland Holding is active in almost all strategically important countries. Just a medium-size global player with a clear commitment to the German location where most of the products are still manufactured.

One company group, a thousand opportunities

The philosophy of the Wieland Group with its headquarters in Bamberg can be summarized that simply. The independent subsidiaries, Wieland Electric and STOCKO Contact, are active beneath Wieland Holding.

Together they cover an extraordinarily wide product portfolio in the field of electrical engineering and electronics. It comprises control cabinet engineering, industrial multipole connectors as well as overvoltage technology and building system technology.

Wieland Electric is active in most areas of automation technology and delivers as the industry's driver for innovation. Safety first – Wieland Electric is ideally positioned with its modular system solutions such as

Series 4000, ***samos***®, ***samos***® PRO and the new ***sensor*** PRO safety sensors.

podis®, the solution-oriented system for remote power distribution, and ***ricos*** TP, the latest development in the field of automation systems for heavy duty industrial requirements, are only two examples.

In the building installation system sector, Wieland Electric, with its ***gesis***® system, is the world market leader in pluggable electrical installation. With good reason do planners and architects of the tallest and most interesting construction projects worldwide, such as the Petronas Towers in Kuala Lumpur, rely on ***gesis***® components from Wieland. Wieland is the pioneer on a path toward the intelligent home by consistently developing its ***gesis***® product range, especially with regards to the demands of electronic networking.

Wieland Electric was founded in 1910 in Bamberg. With 1350 staff members it is the largest subsidiary within the company group of Wieland Holding. With its numerous innovations, Wieland Electric has become a major supplier of electrical connection technology. Export share is currently at 58 %.

STOCKO Contact is located in North Rhine-Westphalia's Wuppertal and has been a member of the Wieland Group since 2001. The company can look back at a history of more than 100 years. STOCKO Contact is one of the biggest European manufacturers of connector systems and crimp contacts.

100 years young and full of innovative energy ...

this is the foundation of our company philosophy.
From this statement Wieland Electric will not just maintain, but expand its social responsibility into the future. Eco-friendly high-tech products, manufactured according to state-of-the-art production standards, an audited environmental management system and extensive investments in our facilities with cutting-edge environmental technologies are a matter of fact. A company policy that also commits us to the long term responsibility for the future of our families and children, as well as for the city of Bamberg, in addition to innovative system solutions for our customers. In our opinion, worldwide action and regional responsibility are united.

DIN rail terminal blocks with tension spring connection

Page 10/11	WKF 1,5/35	WKF 1,5 D1/2/35	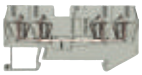 WKF 1,5 D2/2/35		
Page 12/13	WKF 1,5 SL/35	WKF 1,5 D1/2/SL/35	WKF 1,5 D2/2/SL/35		
Page 14/15	WKFN 2,5 /35	WKFN 2,5 D1/2/35	WKFN 2,5 D2/2/35		WKF 16 /35 PV/WKFN
Page 16/17	WKFN 2,5 SL/35	WKFN 2,5 D1/2/SL/35	WKFN 2,5 D2/2/SL/35		
Page 18/19	WKFN 4 /35	WKFN 4 D1/2/35	WKFN 4 D2/2/35		WKF 16 /35 PV/WKFN
Page 20/21	WKFN 4 SL/35	WKFN 4 D1/2/SL/35	WKFN 4 D2/2/SL/35		
Page 22/23	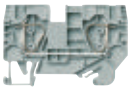 WKFN 6/35	WKFN 6 D1/2/35	WKFN 6 SL/35	WKFN 6 D1/2/SL/35	
Page 24/25	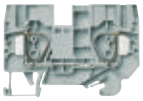 WKFN 10/35	WKFN 10 D1/2/35	WKFN 10 SL/35	WKFN 10 D1/2/SL/35	
Page 26/27	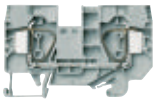 WKFN 16/35	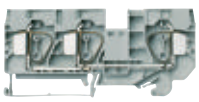 WKFN 16 D1/2/35	WKFN 16 SL/35	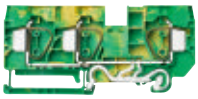 WKFN 16 D1/2/SL/35	
Page 28/29	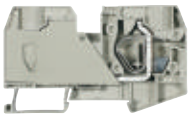 WKF 35/35		WKF 35 SL/35		

Page 32/33	WKF 1,5 E2/35	WKF 1,5 E2/VB/35	WKF 1,5 E2/SL/35		
Page 34/35	WKFN 2,5 E/35 WKFN 2,5 E/N/D/35	WKFN 2,5 E/VB/35	WKFN 2,5 E/D/SL/35 WKFN 2,5 E/N/SL/35	WKFN 2,5 E/SL/35	
Page 36/37	WKFN 2,5 E1/2/35 WKFN 2,5 E1/2/N/D/35	WKFN 2,5 E1/2/VB/35	WKFN 2,5 E1/2/D/SL/35 WKFN 2,5 E1/2/N/SL/35	WKFN 2,5 E1/2/SL/35	
Page 38/39	WKFN 2,5 E3/35	WKFN 2,5 E3/VB/35	WKFN 2,5 E3/D/D/SL/35 WKFN 2,5 E3/N/D/SL/35	WKFN 2,5 E3/SL/35	
Page 40/41	WKFN 4 E/35 WKFN 4 E/N/D/35	WKFN 4 E/VB/35	WKFN 4 E/D/SL/35 WKFN 4 E/N/SL/35	WKFN 4 E/SL/35	
Page 42/43	WKFN 2,5 E...G	WKFN 2,5 E...G		WKFN 4 E...G	WKFN 4 E...G
Page 44/45	WKFN 2,5 TKM/35	WKFN 2,5 TKM 1/2/35	WKFN 2,5 TKM 2/2/35		WKF 16/35 PV/WKFN
Page 46/47	WKFN 2,5 TKM E1/35	WKFN 2,5 TKM E2/35			
Page 48/49	WKFN 4 FSI	WKFN 4 FSI LED 12/24	Fuses	WKF 16/35 PV/WKFN	
Page 50/51	WKFN 4 TKG with THSi 5 x 20	WKFN 4 TKG with THSi 6,3 x 32		WKFN 4 TKG with SiST	WKFN 4 TKG with DiST
Page 54/55	WKFN 2,5 F/P/F	WKFN 2,5 2P/2F	WKFN 2,5 E/../../..		WBF 2,5/../..
Page 56/57	WKF 2,5 D2/8113/35	WKF 2,5 D2/8113/SL/35	WKF 1,5 E/8113/35	WKF 1,5 E/35	8113 BFK

DIN rail terminal blocks with tension spring connection

Page 60/61	WKF 1,5 KOI 3L WKF 1,5 KOI 3L-PGE	WKF 1,5 KOI 3L/SL WKF 1,5 KOI 3L/SL-PGE	WKF 1,5 KOE WKF 1,5 KOE-PGN	WKF 1,5 KOA 2L/SL WKF 1,5 KOA 2L/SL-PGE	VM WKF...
Page 62/63			WKF 4 3D/SL		
Page 64/65			WKMF 2,5 /15	WKMF 2,5 SL/15	
Page 66/67	WKF 2,5 M/F	WKF 2,5 MD/F		WKF 2,5 M/R	WKF 2,5 MD/R
Page 68/69	WKF 2,5 M/15	WKF 2,5 MD/15		WKF 2,5 M/35	WKF 2,5 MD/35
Page 72/73	Cross connectors	Notching tool	PS WRC/F	Warning symbol/LEL	Screwdriver
Page 74/75	TS 35x7,5	TS 35x15	TS 35x15	9708/2 S35	WEF 1/35
Page 78/79	wieplan	marcom	wiemarc	wieplot 500	Accessories
Page 80/81	Marking accessories	Marking tags	1.5 mm²/4 mm wide 2.5 mm²/5 mm wide	4 mm²/6 mm wide	10 mm²/10 mm wide 16 mm²/12 mm wide 35 mm²/16 mm wide
Page 82/83	Ferrules	Ferrules		Stripping tool 0.08-10 mm²	Pressing tools

Information about EXe

Technical information

- The information regarding cross sectional area and connection types pertains to unprepared wires without ferrules!
  Ferrules are not necessary for secure connection. Whenever ferrules are used, make sure that the tools specified by the manufacturer are used exclusively.
- The voltage ratings apply to the terminals in their intended application. When different products are mounted adjacent to each other, the proper isolation distances must be adhered to.
- If the ground blocks of the ***fasis*** product family are not used in block assemblies, but are mounted to the rail as single terminal blocks, end clamps have to be used.
- A detailed description of technical data, the standards requirements, and the application conditions are available under ***facts*** & DATA wiedergegeben.

ATEX regulation

- For the use of DIN rail terminal blocks in Ex areas, the regulations of EN 60079-0 apply; whereas for increased safety Ex e the regulations of EN 60079-7 must be followed. For an approximation of the laws of the EU member states, directive 94/9/EG was created, which is generally known as ATEX 100a and which is the basis for harmonization in this field. ATEX stands for "atmoshpere explosive" while 100a refers to the corresponding article of the EC contract.
- Directive ATEX 100a applies for protection against dust and gas explosions in all industrial Ex areas and in mining.
  The testing and certificating institutes named in directive ATEX 100a must follow accreditation procedures which are the same throughout Europe.
- In accordance with EN 60070-0/60079-7 and ATEX 100a, these certifying institutes write out EC certificates for prototype tests.
  These prototype test certificates for components together with the corresponding quality system certification of the supplier are required to obtain the so-called ATEX approval.
- In combination with the Ex mark, the markings of the Wieland terminal blocks have the following meaning:

Ex	Identification
II	Device group
2	Category
G D	Areas
KEMA	Name of testing institute
ATEX...	Certifcate, year of testing, number

Mounting instructions for Ex e applications

- If feed-through blocks are mounted directly adjacent to other feed-through blocks of a different size, or directly adjacent to ground blocks, the open side of the block group of the same type must be covered by an end plate or partition.
- If adjacent DIN rail terminal blocks are jumpered or if jumpered DIN rail terminal blocks are positioned next to unjumpered DIN rail terminal blocks, a partition plate must be inserted between the individual terminal block groups or at the beginning and end of a laterally or longitudinally connected terminal block (group) in order to meet the specified isolation distances. Notched out and jumpering cross connectors can not be used in Ex areas.
- If the terminal blocks are combined with other certified series and sizes and when their accessories are used, the required creepage distances and clearances must be adhered to.
- The feed through terminal blocks and protective conductor terminal blocks are suitable for enclosures for use in explosive gas atmospheres or for use in the presence of combustible dust. For explosive gas atmospheres these enclosures must satisfy the requirements of EN 60079-0 and EN 60079-7. For combustible dust these enclosures must satisfy the requirements of EN 61241-0 and EN 61241-1 rather EN 50281-1-1.
- The indicated values for the current carrying capability refer to a maximum ambient temperature of 40 °C. When the terminal blocks are loaded with the maximum rated current the temperature rise will be max. 45 K.

DQS certification for all company sectors

- Quality standard as per DIN ISO 9001 in Development, Production and Assembly
- Continued control of the quality standard by means of regular internal and external quality audits
- Compatible with certificates of other countries:
  – BSI Certificate, Great Britain
  – SQS Certificate, Switzerland
  – Aib-Vincotte Certificate, Belgium
  – ÖQS Certificate, Austria

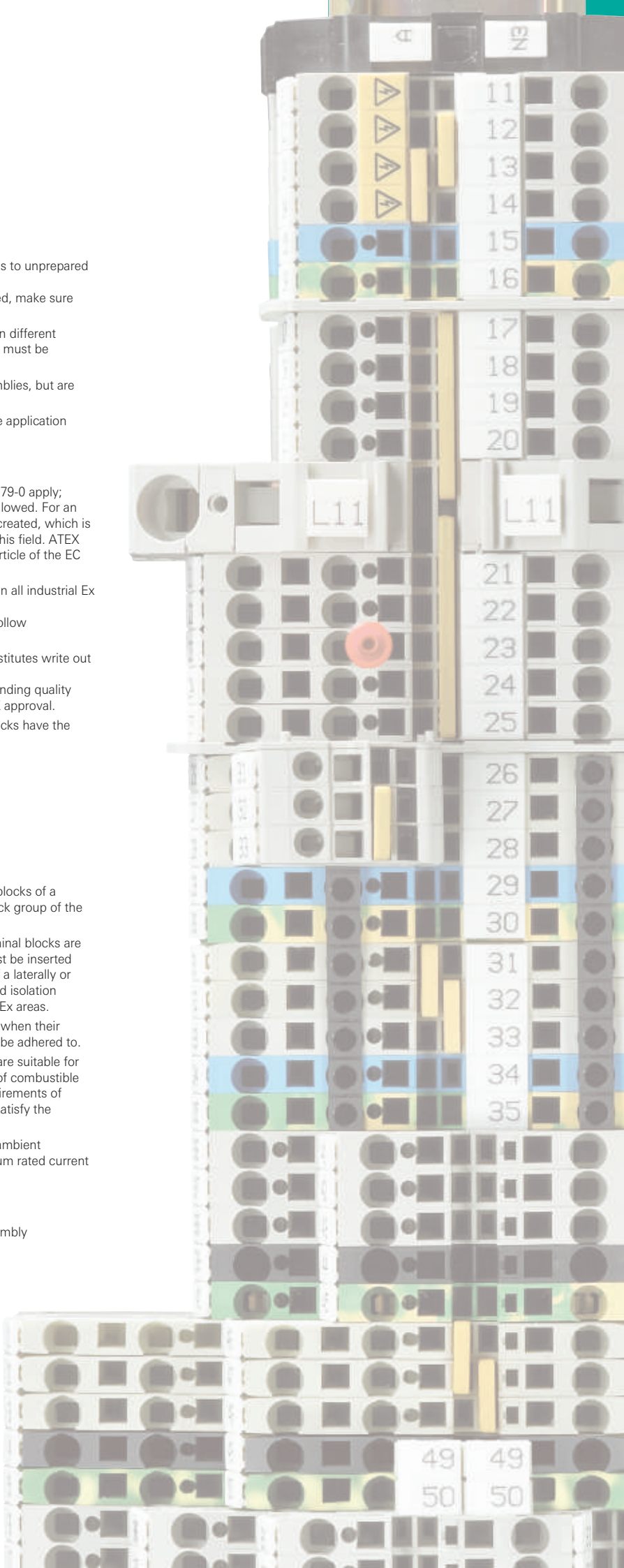

DIN rail terminal blocks with tension spring connection

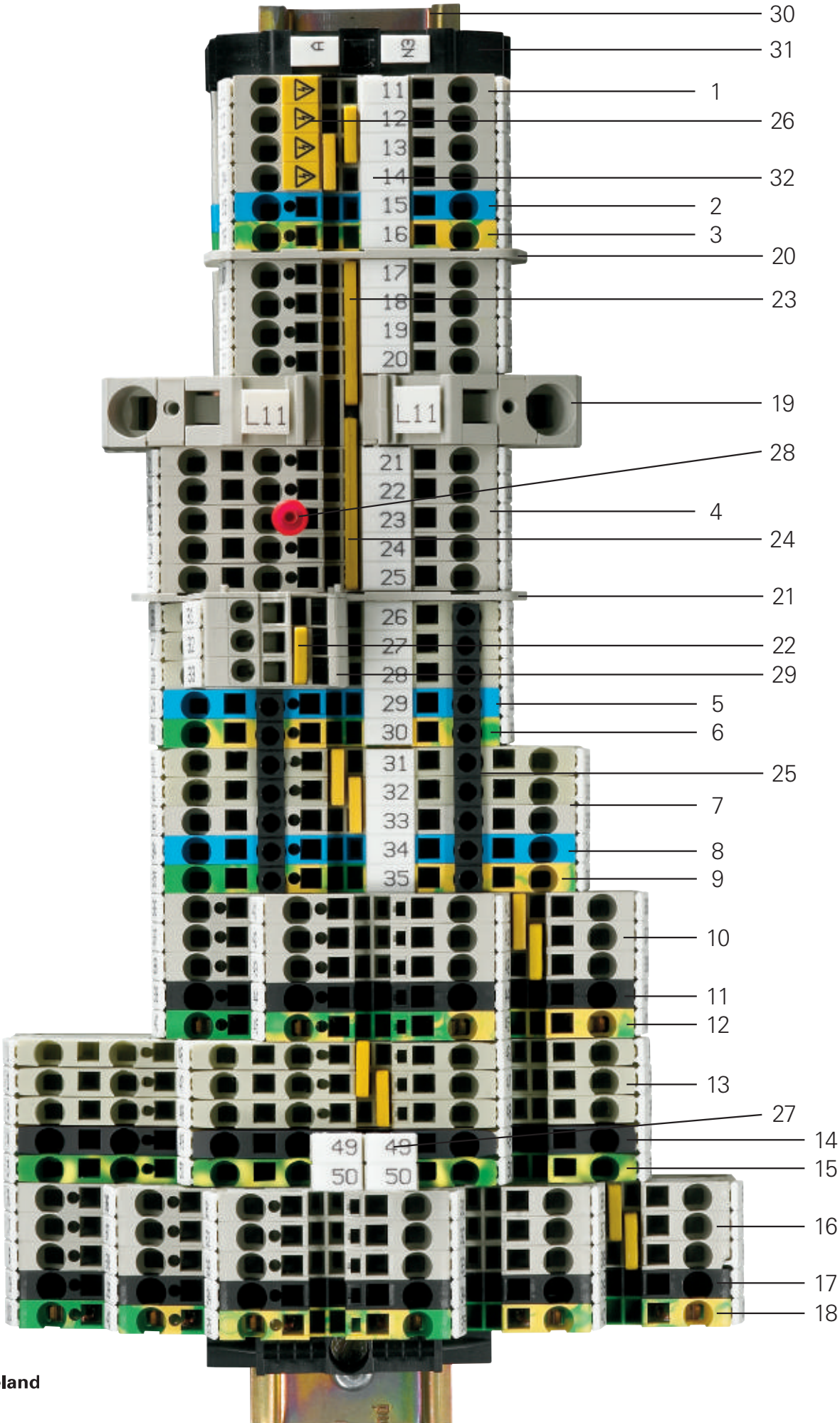

Pos.	Description	Type	Part number
1	Feed-through block	WKFN 2,5/35	56.703.0055.0
2	Feed-through block, blue	WKFN 2,5/35 BLAU	56.703.0055.6
3	Ground block	WKFN 2,5 SL/35	56.703.9055.0
4	Duo feed-through block	WKFN 2,5 D1/2/35	56.703.5055.0
5	Duo feed-through block, blue	WKFN 2,5 D1/2/35 BLAU	56.703.5055.6
6	Duo ground block	WKFN 2,5 D1/2/SL/35	56.703.9355.0
7	Duo feed-through block	WKFN 2,5 D2/2/35	56.703.5155.0
8	Duo feed-through block, blue	WKFN 2,5 D2/2/35 BLAU	56.703.5155.6
9	Duo ground block	WKFN 2,5 D2/2/SL/35	56.703.9155.0
10	Multi-tier block	WKFN 2,5 E/35	56.703.7055.0
11	Multi-tier block, connected	WKFN 2,5 E/VB/35	56.703.6955.1
12	Multi-tier ground block	WKFN 2,5 E/SL/35	56.703.8955.0
13	Duo multi-tier block	WKFN 2,5 E1/2/35	56.703.6055.0
14	Duo multi-tier block, connected	WKFN 2,5 E1/2/VB/35	56.703.5955.1
15	Duo multi-tier ground block	WKFN 2,5 E1/2/SL/35	56.703.6255.0
16	Multi-tier block	WKFN 2,5 E3/35	56.703.3055.0
17	Multi-tier block, connected	WKFN 2,5 E3/VB/35	56.703.2955.1
18	Multi-tier ground block	WKFN 2,5 E3/SL/35	56.703.8855.0
19	Supply block	WKF 16/35/PV/WKFN	56.716.0353.0
20	Partition	TWFN 2,5	07.312.6855.0
21	Partition	TWFN 2,5 D1/2	07.312.7055.0
22	Cross connector, insulated	IVB WKF 2,5-2	Z7.280.6227.0
23	Cross connector, insulated	IVB WKF 2,5-5	Z7.280.6527.0
24	Cross connector, insulated	IVB WKF 2,5-6	Z7.280.6627.0
25	Wire entry guide	LELN 2,5/3 SCHWARZ	05.564.3955.0
26	Cover with warning symbol	ADFN 2,5/4 GELB	04.343.8253.8
27	Marking tag carrier, 2-fold	ST 5/2	04.243.0755.0
28	Test plug with insulated handle	ST 2/2,3	Z5.553.2921.0
29	Test adapter, snap-on	PS WKC/F	Z1.299.9753.0
30	Mounting rail	35x27x7,5 EN 50022	98.300.0000.0
31	End clamp, without screw	WEF 1/35	Z5.523.9353.0
32	Marking strips	9705 A/5/10 B	04.845.xx53.0

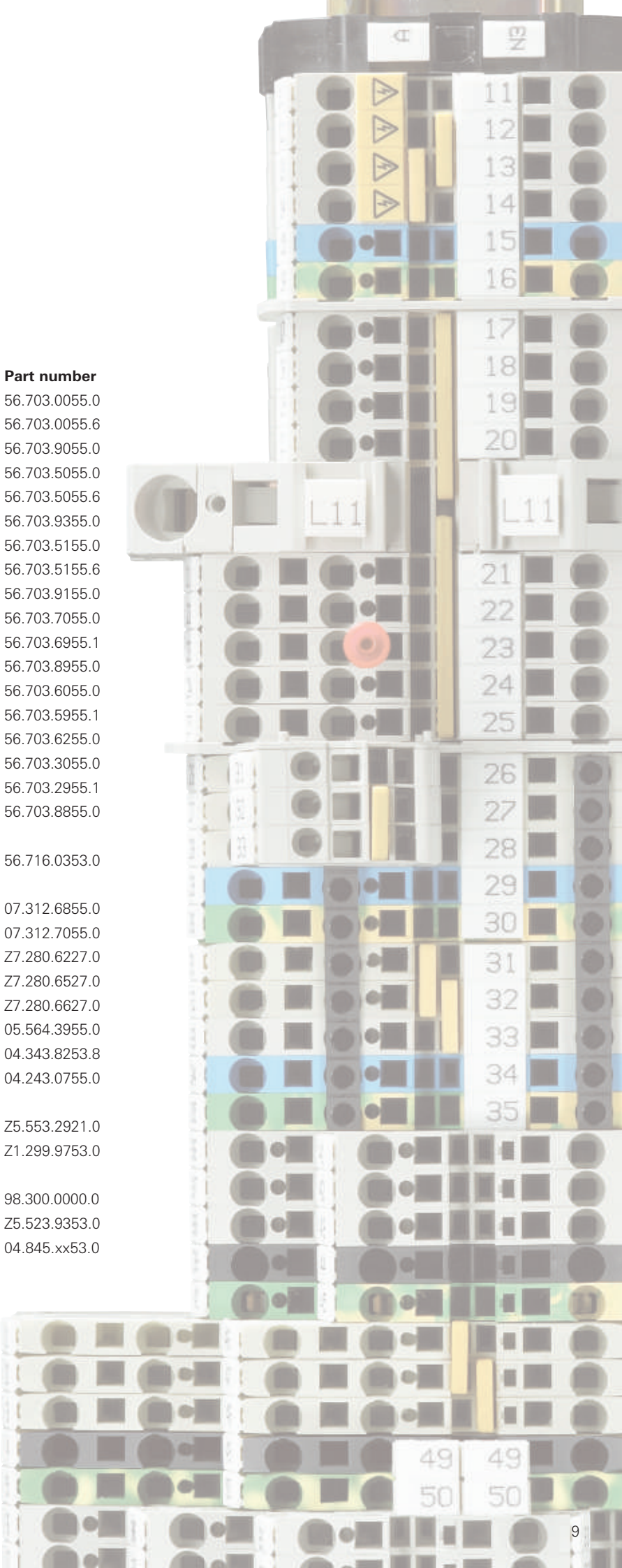

Duo feed-through blocks with tension spring connection

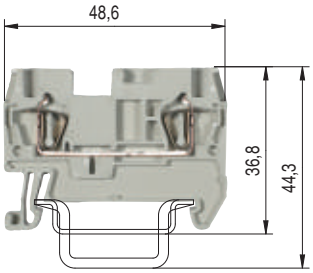

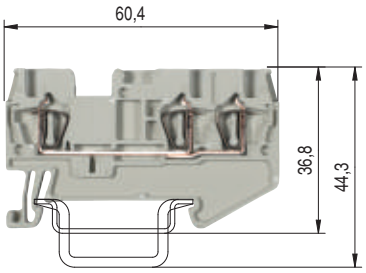

		WKF 1,5/35			WKF 1,5 D1/2/35		
0344 Ⓔx II 2GD		fine-stranded	solid	V / A	fine-stranded	solid	V / A
Ex e II		0.08–1.5 mm²	0.08–1.5 mm²	500 V/6 kV/3 / 17.5	0.08–1.5 mm²	0.08–1.5 mm²	500 V/6 kV/3 / 17.5
EN 60 947-7-1; 2002		No. 26-14 AWG		300 V / 15	No. 26-14 AWG		300 V / 15
UL ratings	field/factory wiring	No. 26-14 AWG		300 V / 15	No. 26-14 AWG		300 V / 15
CSA ratings		0.14–1.5 mm²	0.14–1.5 mm²	440 V*) / 17.5/16.5[3]	0.14–1.5 mm²	0.14–1.5 mm²	440 V*) / 17.5/16.5[3]
KEMA 03 ATEX 2056 U1)	EN 60079-0/EN 60079-7						
Width	Wire strip length	4 mm		10 mm	4 mm		10 mm
Approvals		ATEX cULus			ATEX cULus		

		Type	Part No.	Std. Pack	Type	Part No.	Std. Pack
Feed-through block	gray	WKF 1,5/35	56.702.0053.0	50	WKF 1,5 D1/2/35	56.702.5053.0	50
Feed-through block	blue	WKF 1,5/35 BLAU	56.702.0053.6	50	WKF 1,5 D1/2/35 BLAU	56.702.5053.6	50
Accessories							
1. Mounting rail 35, 7.5 mm high	L = 2 m	35x27x7,5 EN 60715	98.300.0000.0	1	35x27x7,5 EN 60715	98.300.0000.0	1
Mounting rail 35, 15 mm high	L = 2 m	35x24x15 EN 60715	98.360.0000.0	1	35x24x15 EN 60715	98.360.0000.0	1
2. End clamp TS 35, with screw[2]	8 mm wide	9708/2 S35	Z5.522.8553.0	100	9708/2 S35	Z5.522.8553.0	100
End clamp TS 35, without screw	8 mm wide	WEF 1/35	Z5.523.9353.0	100	WEF 1/35	Z5.523.9353.0	100
3. End plate	gray	APF 1,5	07.312.8153.0	10	APF 1,5 D1/2	07.312.8353.0	10
	blue						
Segment end plate	gray				SAPF 1,5	07.312.8953.0	10
4. Partition plate	gray	TWF 1,5	07.312.8253.0	10	TWF 1,5 D1/2	07.312.8453.0	10
	blue						
5. Cross connector	2 pole	IVB WKF 1,5–2	Z7.268.0227.0	10	IVB WKF 1,5–2	Z7.268.0227.0	10
insulated	3 pole	IVB WKF 1,5–3	Z7.268.0327.0	10	IVB WKF 1,5–3	Z7.268.0327.0	10
	4 pole	IVB WKF 1,5–4	Z7.268.0427.0	10	IVB WKF 1,5–4	Z7.268.0427.0	10
	5 pole	IVB WKF 1,5–5	Z7.268.0527.0	10	IVB WKF 1,5–5	Z7.268.0527.0	10
	6 pole						
	7 pole						
	8 pole						
	10 pole	IVB WKF 1,5–10	Z7.268.1027.0	10	IVB WKF 1,5–10	Z7.268.1027.0	10
	20 pole	IVB WKF 1,5–20	Z7.268.2027.0	10	IVB WKF 1,5–20	Z7.268.2027.0	10
6. Wire entry guide	0.13–0.2 mm²	LEL 1,5/1 WEISS	05.564.4253.0	10	LEL 1,5/1 WEISS	05.564.4253.0	10
	0.25–0.5 mm²	LEL 1,5/2 GRAU	05.564.4353.0	10	LEL 1,5/2 GRAU	05.564.4353.0	10
	0.75–1.0 mm²						
7. Cover with warning symbol over 4 blocks		ADF 1,5/5 GELB	04.343.6953.8	10	ADF 1,5/5 GELB	04.343.6953.8	10
8. Marking tag carrier, 2-fold							
9. Test adapter, modular							
10. Test plug							
11. Screwdriver, uninsulated		DIN 5264 B 0,4x2,5	06.502.4300.0	5	DIN 5264 B 0,4x2,5	06.502.4300.0	5
Marking accessories see page 77–81							

*) For maintaining the proper isolation distances, the open side of a feed-through terminal block as well as both sides of a jumper are to be covered by partitions.
1) Follow the Ex installation instructions. 2) Do not use in Ex environments. 3) Rated current when using cross connectors

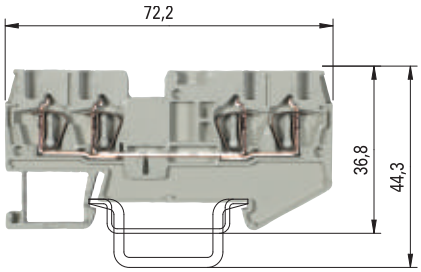

WKF 1,5 D2/2/35

fine-stranded	solid	V	A
0.08–1.5 mm²	0.08–1.5 mm²	500 V/6 kV/3	17.5
No. 26-14 AWG		300 V	15
No. 26-14 AWG		300 V	15
0.14–1.5 mm²	0.14–1.5 mm²	440 V*)	17.5/16.5³)
4 mm			10 mm

ATEX

Type	Part No.	Std. Pack
WKF 1,5 D2/2/35	56.702.5153.0	50
WKF 1,5 D2/2/35 BLAU	56.702.5153.6	50
35x27x7,5 EN 60715	98.300.0000.0	1
35x24x15 EN 60715	98.360.0000.0	1
9708/2 S35	Z5.522.8553.0	100
WEF 1/35	Z5.523.9353.0	100
APF 1,5 D2/2	07.312.8553.0	10
SAPF 1,5	07.312.8953.0	10
TWF 1,5 D2/2	07.312.8653.0	10
IVB WKF 1,5–2	Z7.268.0227.0	10
IVB WKF 1,5–3	Z7.268.0327.0	10
IVB WKF 1,5–4	Z7.268.0427.0	10
IVB WKF 1,5–5	Z7.268.0527.0	10
IVB WKF 1,5–10	Z7.268.1027.0	10
IVB WKF 1,5–20	Z7.268.2027.0	10
LEL 1,5/1 WEISS	05.564.4253.0	10
LEL 1,5/2 GRAU	05.564.4353.0	10
ADF 1,5/5 GELB	04.343.6953.8	10
DIN 5264 B 0,4x2,5	06.502.4300.0	5

Duo ground blocks with tension spring connection

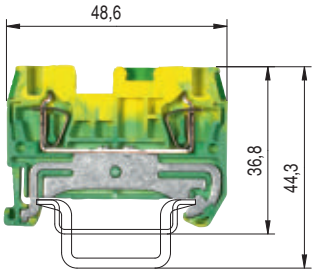

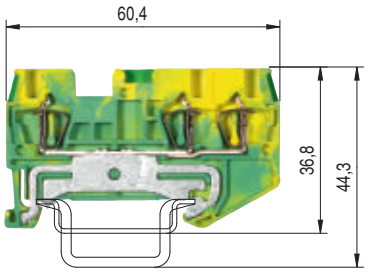

		WKF 1,5 SL/35			WKF 1,5 D1/2/SL/35		
0344 Ex II 2GD		fine-stranded	solid	V	fine-stranded	solid	V
Ex e II		0.08–1.5 mm²	0.08–1.5 mm²	500 V/6 kV/3[4]	0.08–1.5 mm²	0.08–1.5 mm²	500 V/6 kV/3[4]
EN 60 947-7-2; 2002		No. 26-14 AWG		300 V	No. 26-14 AWG		300 V
UL ratings	field/factory wiring	No. 26-14 AWG		300 V	No. 26-14 AWG		300 V
CSA ratings		0.14–1.5 mm²	0.14–1.5 mm²	*)	0.14–1.5 mm²	0.14–1.5 mm²	*)
KEMA 03 ATEX 2056 U1)	EN 60079-0/EN 60079-7						
Width	Wire strip length	4 mm		10 mm	4 mm		10 mm
Approvals		ATEX			ATEX		

		Type	Part No.	Std. Pack	Type	Part No.	Std. Pack
Ground block	yellow/green	WKF 1,5 SL/35	56.702.9053.0	50	WKF 1,5 D1/2/SL/35	56.702.9353.0	50
Accessories							
1. Mounting rail 35, 7.5 mm high	L = 2 m	35x27x7,5 EN 60715	98.300.0000.0	1	35x27x7,5 EN 60715	98.300.0000.0	1
Mounting rail 35, 15 mm high	L = 2 m	35x24x15 EN 60715	98.360.0000.0	1	35x24x15 EN 60715	98.360.0000.0	1
2. End clamp TS 35, with screw[2]	8 mm wide	9708/2 S35	Z5.522.8553.0	100	9708/2 S35	Z5.522.8553.0	100
End clamp TS 35, without screw	8 mm wide	WEF 1/35	Z5.523.9353.0	100	WEF 1/35	Z5.523.9353.0	100
3. End plate	gray	APF 1,5	07.312.8153.0	10	APF 1,5 D1/2	07.312.8353.0	10
	blue						
Segment end plate	gray				SAPF 1,5	07.312.8953.0	10
4. Partition plate	gray	TWF 1,5	07.312.8253.0	10	TWF 1,5 D1/2	07.312.8453.0	10
	blue						
5. Cross connector	2 pole						
insulated	3 pole						
	4 pole						
	5 pole						
	6 pole						
	7 pole						
	8 pole						
	10 pole						
	20 pole						
6. Wire entry guide	0.13–0.2 mm²	LEL 1,5/1 WEISS	05.564.4253.0	10	LEL 1,5/1 WEISS	05.564.4253.0	10
	0.25–0.5 mm²	LEL 1,5/2 GRAU	05.564.4353.0	10	LEL 1,5/2 GRAU	05.564.4353.0	10
	0.75–1.0 mm²						
7. Cover with warning symbol over 4 blocks		ADF 1,5/5 GELB	04.343.6953.8	10	ADF 1,5/5 GELB	04.343.6953.8	10
8. Marking tag carrier, 2-fold							
9. Test adapter, modular							
10. Test plug							
11. Screwdriver, uninsulated		DIN 5264 B 0,4x2,5	06.502.4300.0	5	DIN 5264 B 0,4x2,5	06.502.4300.0	5
Marking accessories see page 77–81							

*) In order to maintain the proper isolation distances, the open side of a ground block is to be covered by an end plate.
[1] Follow the Ex installation instructions.
[2] Do not use in Ex environments.
[3] For the current-carrying capabilities of the mounting rails see AT catalog section ***facts*** & DATA.
[4] Ratings to adjacent feed-through blocks of the same series and size

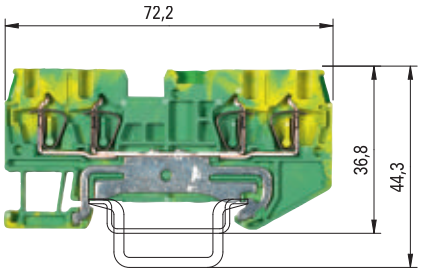

WKF 1,5 D2/2/SL/35

fine-stranded	solid	V	A
0.08–1.5 mm²	0.08–1.5 mm²	500 V/6 kV/3[4]	[3]
No. 26-14 AWG		300 V	
No. 26-14 AWG		300 V	
0.14–1.5 mm²	0.14–1.5 mm²	*)	
4 mm			10 mm

ATEX

Type	Part No.	Std. Pack
WKF 1,5 D2/2/SL/35	56.702.9153.0	50
35x27x7,5 EN 60715	98.300.0000.0	1
35x24x15 EN 60715	98.360.0000.0	1
9708/2 S35	Z5.522.8553.0	100
WEF 1/35	Z5.523.9353.0	100
APF 1,5 D2/2	07.312.8553.0	10
SAPF 1,5	07.312.8953.0	10
TWF 1,5 D2/2	07.312.8653.0	10
LEL 1,5/1 WEISS	05.564.4253.0	10
LEL 1,5/2 GRAU	05.564.4353.0	10
ADF 1,5/5 GELB	04.343.6953.8	10
DIN 5264 B 0,4x2,5	06.502.4300.0	5

Duo feed-through blocks with tension spring connection

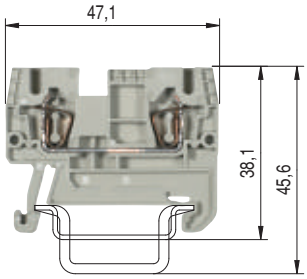

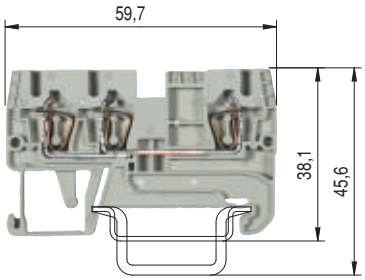

		WKFN 2,5/35			WKFN 2,5 D1/2/35		
0344 Ex II 2GD IM2		fine-stranded	solid	V	fine-stranded	solid	V
Ex e I/II		0.13–2.5 mm²	0.13–4 mm²	800 V/8 kV/3	0.13–2.5 mm²	0.13–4 mm²	800 V/8 kV/3
EN 60 947-7-1:2002		No. 22-12 AWG		600 V	No. 22-12 AWG		600 V
UL ratings	field/factory wiring	No. 24-12 AWG		600 V	No. 24-12 AWG		600 V
CSA ratings		0.2–2.5 mm²	0.13–4 mm²	550 V	0.2–2.5 mm²	0.13–4 mm²	550 V
PTB 04 ATEX 1051 U1)	EN 60 079-0/EN 60 079-7	5 mm		11 mm	5 mm		11 mm
Width	Wire strip length						
Approvals							

		Type	Part No.	Std. Pack	Type	Part No.	Std. Pack
Feed-through block	gray	WKFN 2,5/35	56.703.0055.0	100	WKFN 2,5 D1/2/35	56.703.5055.0	100
Feed-through block	blue	WKFN 2,5/35 BLAU	56.703.0055.6	100	WKFN 2,5 D1/2/35 BLAU	56.703.5055.6	100
Supply block	gray						
Accessories							
1. Mounting rail 35, 7.5 mm high	L = 2 m	35x27x7,5 EN 60715	98.300.0000.0	1	35x27x7,5 EN 60715	98.300.0000.0	1
Mounting rail 35, 15 mm high	L = 2 m	35x24x15 EN 60715	98.360.0000.0	1	35x24x15 EN 60715	98.360.0000.0	1
2. End clamp TS 35, with screw[2]	8 mm wide	9708/2 S35	Z5.522.8553.0	100	9708/2 S35	Z5.522.8553.0	100
End clamp TS 35, without screw	8 mm wide	WEF 1/35	Z5.523.9353.0	100	WEF 1/35	Z5.523.9353.0	100
3. End plate	gray	APFN 2,5	07.312.6755.0	10	APFN 2,5 D1/2	07.312.6955.0	10
	blue	APFN 2,5 BLAU	07.312.6755.6	10	APFN 2,5 D1/2 BLAU	07.312.6955.6	10
Segment end plate	gray						
4. Partition plate	gray	TWFN 2,5	07.312.6855.0	10	TWFN 2,5 D1/2	07.312.7055.0	10
	blue	TWFN 2,5 BLAU	07.312.6855.6	10	TWFN 2,5 D1/2 BLAU	07.312.7055.6	10
5. Cross connector	2 pole	IVB WKF 2,5–2	Z7.280.6227.0	10	IVB WKF 2,5–2	Z7.280.6227.0	10
insulated	3 pole	IVB WKF 2,5–3	Z7.280.6327.0	10	IVB WKF 2,5–3	Z7.280.6327.0	10
	4 pole	IVB WKF 2,5–4	Z7.280.6427.0	10	IVB WKF 2,5–4	Z7.280.6427.0	10
	5 pole	IVB WKF 2,5–5	Z7.280.6527.0	10	IVB WKF 2,5–5	Z7.280.6527.0	10
	6 pole	IVB WKF 2,5–6	Z7.280.6627.0	10	IVB WKF 2,5–6	Z7.280.6627.0	10
	7 pole	IVB WKF 2,5–7	Z7.280.6727.0	20	IVB WKF 2,5–7	Z7.280.6727.0	20
	8 pole	IVB WKF 2,5–8	Z7.280.6827.0	20	IVB WKF 2,5–8	Z7.280.6827.0	20
	9 pole	IVB WKF 2,5–9	Z7.280.6927.0	20	IVB WKF 2,5–9	Z7.280.6927.0	20
	10 pole	IVB WKF 2,5–10	Z7.280.7027.0	20	IVB WKF 2,5–10	Z7.280.7027.0	20
6. Wire entry guide	0.13–0.2 mm²	LELN 2,5/1 WEISS	05.564.3755.0	100	LELN 2,5/1 WEISS	05.564.3755.0	100
	0.25–0.5 mm²	LELN 2,5/2 GRAU	05.564.3855.0	100	LELN 2,5/2 GRAU	05.564.3855.0	100
	0.75–1.0 mm²	LELN 2,5/3 SCHWARZ	05.564.3955.0	100	LELN 2,5/3 SCHWARZ	05.564.3955.0	100
7. Cover with warning symbol over 4 blocks		ADFN 2,5/4 GELB	04.343.8353.8	10	ADFN 2,5/4 GELB	04.343.8353.8	10
8. Marking tag carrier, 2-fold							
9. Test adapter, modular		PS WKC/F	Z1.299.9753.0	10	PS WKC/F	Z1.299.9753.0	10
10. Test plug		ST 2/2,3	Z5.553.2921.0	10	ST 2/2,3	Z5.553.2921.0	10
11. Screwdriver, uninsulated		DIN 5264 B 0,6x3,5	06.502.4000.0	5	DIN 5264 B 0,6x3,5	06.502.4000.0	5
Screwdriver, uninsulated , MINI		DIN 5264 B 0,6x3,5 M	06.502.5000.0	10	DIN 5264 B 0,6x3,5 M	06.502.5000.0	10
Marking accessories see page 77–81							

[1] Follow the Ex installation instructions.

[2] for 40 K and 45 K

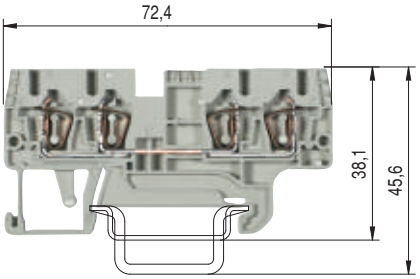

– Potential distribution with standard cross connector IVB WKF 2,5...

– Parallel connection of two cross connectors –> double jumpering

– Potential distributions are possible on one or both sides

Potential distribution	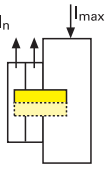		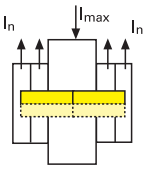	
Jumpering	one side		both sides	
	single	double	single	double
I_{max}	48	68	72	76
I_{Nblock}	24	24	24	24

$$I_{max} = \sum I_n \leq \sum I_{Nblock}$$

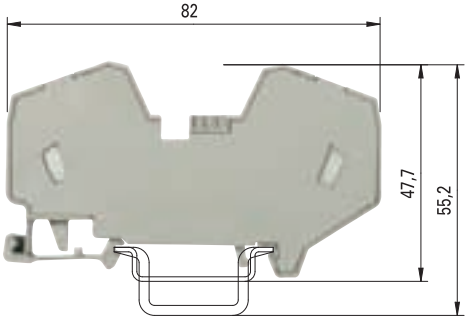

WKFN 2,5 D2/2/35

fine-stranded	solid	V	A
0.13–2.5 mm²	0.13–4 mm²	800 V/8 kV/3	24
No. 22-12 AWG		600 V	20
No. 24-12 AWG		600 V	24
0.2–2.5 mm²	0.13–4 mm²	550 V	22[2)]
5 mm			11 mm

WKF 16/35 PV/WKFN

fine-stranded	solid/stranded	V	A
4–16 mm²	4–16 mm²	800 V/8 kV/3	76
No. 24-4 AWG		600 V	75
No. 12-4 AWG		600 V	78
4–16 mm²	4–16 mm²	690 V	64 A*
12 mm			15 mm

ATEX

Type	Part No.	Std. Pack
WKFN 2,5 D2/2/35	56.703.5155.0	100
WKFN 2,5 D2/2/35 BLAU	56.703.5155.6	100
35x27x7,5 EN 60715	98.300.0000.0	1
35x24x15 EN 60715	98.360.0000.0	1
9708/2 S35	Z5.522.8553.0	100
WEF 1/35	Z5.523.9353.0	100
APFN 2,5 D2/2	07.312.7155.0	10
APFN 2,5 D2/2 BLAU	07.312.7155.6	10
TWFN 2,5 D2/2	07.312.7255.0	10
TWFN 2,5 D2/2 BLAU	07.312.7255.6	10
IVB WKF 2,5–2	Z7.280.6227.0	10
IVB WKF 2,5–3	Z7.280.6327.0	10
IVB WKF 2,5–4	Z7.280.6427.0	10
IVB WKF 2,5–5	Z7.280.6527.0	10
IVB WKF 2,5–6	Z7.280.6627.0	10
IVB WKF 2,5–7	Z7.280.6727.0	20
IVB WKF 2,5–8	Z7.280.6827.0	20
IVB WKF 2,5–9	Z7.280.6927.0	20
IVB WKF 2,5–10	Z7.280.7027.0	20
LELN 2,5/1 WEISS	05.564.3755.0	100
LELN 2,5/2 GRAU	05.564.3855.0	100
LELN 2,5/3 SCHWARZ	05.564.3955.0	100
ADFN 2,5/4 GELB	04.343.8353.8	10
PS WKC/F	Z1.299.9753.0	10
ST 2/2,3	Z5.553.2921.0	10
DIN 5264 B 0,6x3,5	06.502.4000.0	5
DIN 5264 B 0,6x3,5 M	06.502.5000.0	10

Type	Part No.	Std. Pack
WKF 16/35 PV/WKFN	56.716.0353.0	20
35x27x7,5 EN 60715	98.300.0000.0	1
35x24x15 EN 60715	98.360.0000.0	1
9708/2 S35	Z5.522.8553.0	100
WEF 1/35	Z5.523.9353.0	100
IVB WKF 2,5–2	Z7.280.6227.0	10
IVB WKF 2,5–3	Z7.280.6327.0	10
IVB WKF 2,5–4	Z7.280.6427.0	10
IVB WKF 2,5–5	Z7.280.6527.0	10
IVB WKF 2,5–6	Z7.280.6627.0	10
IVB WKF 2,5–7	Z7.280.6727.0	20
IVB WKF 2,5–8	Z7.280.6827.0	20
IVB WKF 2,5–9	Z7.280.6927.0	20
IVB WKF 2,5–10	Z7.280.7027.0	20
ADF 16/4 GELB	04.343.6653.8	10
ST 2/2,3	Z5.553.2921.0	10
DIN 5264 B 1,0x5,5	06.502.4200.0	5

* Type-specific output currents upon request; KEMA 01 ATEX 2087 U[1)]

Duo ground blocks with tension spring connection

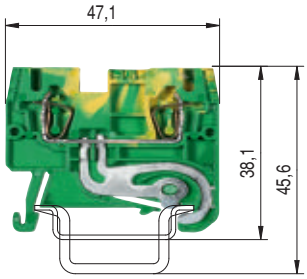

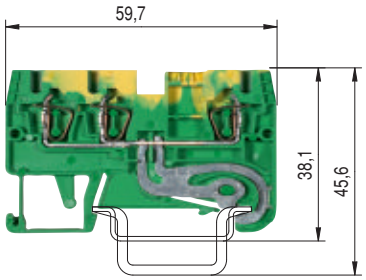

0344 Ⓔx II 2GD IM2
Ex e I/II
EN 60 947-7-2:2002
UL ratings field/factory wiring
CSA ratings
PTB 04 ATEX 1051 U1) EN 60 079-0/EN 60 079-7
Width Wire strip length
Approvals

WKFN 2,5 SL/35

fine-stranded solid V A
0.13–2.5 mm² 0.13–4 mm² 800 V/8 kV/3[4] [3]
No. 22-12 AWG 600 V
No. 24-12 AWG 600 V
0.2–2.5 mm² 0.13–4 mm²
5 mm 11 mm

WKFN 2,5 D1/2/SL/35

fine-stranded solid V A
0.13–2.5 mm² 0.13–4 mm² 800 V/8 kV/3[4] [3]
No. 22-12 AWG 600 V
No. 24-12 AWG 600 V
0.2–2.5 mm² 0.13–4 mm²
5 mm 11 mm

		Type	Part No.	Std. Pack	Type	Part No.	Std. Pack
Ground block	green/yellow	WKFN 2,5 SL/35	56.703.9055.0	100	WKFN 2,5 D1/2/SL/35	56.703.9355.0	100
Accessories							
1. Mounting rail 35, 7.5 mm high	L = 2 m	35x27x7,5 EN 60715	98.300.0000.0	1	35x27x7,5 EN 60715	98.300.0000.0	1
Mounting rail 35, 15 mm high	L = 2 m	35x24x15 EN 60715	98.360.0000.0	1	35x24x15 EN 60715	98.360.0000.0	1
2. End clamp TS 35, with screw	8 mm wide	9708/2 S35	Z5.522.8553.0	100	9708/2 S35	Z5.522.8553.0	100
End clamp TS 35, without screw	8 mm wide	WEF 1/35	Z5.523.9353.0	100	WEF 1/35	Z5.523.9353.0	100
3. End plate	gray						
	blue						
	green/yellow	APFN 2,5 GRÜN	07.312.6755.7	10	APFN 2,5 D1/2 GRÜN	07.312.6955.7	10
4. Partition plate	gray						
	blue						
5. Cross connector	2 pole						
insulated (jumper bar)	3 pole						
	4 pole						
	5 pole						
	6 pole						
	7 pole						
	8 pole						
	9 pole						
	10 pole						
6. Wire entry guide	0.13–0.2 mm²	LELN 2,5/1 WEISS	05.564.3755.0	100	LELN 2,5/1 WEISS	05.564.3755.0	100
	0.25–0.5 mm²	LELN 2,5/2 GRAU	05.564.3855.0	100	LELN 2,5/2 GRAU	05.564.3855.0	100
	0.75–1.0 mm²	LELN 2,5/3 SCHWARZ	05.564.3955.0	100	LELN 2,5/3 SCHWARZ	05.564.3955.0	100
7. Cover with warning symbol over 4 blocks		ADFN 2,5/4 GELB	04.343.8353.8	10	ADFN 2,5/4 GELB	04.343.8353.8	10
8. Marking tag carrier, 2-fold							
9. Test adapter, modular							
10. Test plug							
11. Screwdriver, uninsulated		DIN 5264 B 0,6x3,5	06.502.4000.0	5	DIN 5264 B 0,6x3,5	06.502.4000.0	5
Screwdriver, uninsulated, MINI		DIN 5264 B 0,6x3,5 M	06.502.5000.0	10	DIN 5264 B 0,6x3,5 M	06.502.5000.0	10
Marking accessories see page 77–81							

[1] Follow the Ex installation instructions.
[3] For the current-carrying capabilities of the mounting rails see AT catalog section ***facts*** & DATA.
[4] Ratings to adjacent feed-through blocks of the same series and size

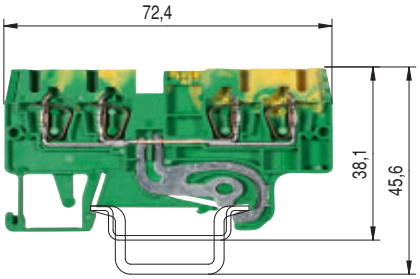

WKFN 2,5 D2/2/SL/35

fine-stranded	solid	V	A
0.13–2.5 mm²	0.13–4 mm²	800 V/8 kV/3[4]	[3]
No. 22-12 AWG		600 V	
No. 24-12 AWG		600 V	
0.2–2.5 mm²	0.13–4 mm²		
5 mm			11 mm

Type	Part No.	Std. Pack
WKFN 2,5 D2/2/SL/35	56.703.9155.0	100
35x27x7,5 EN 60715	98.300.0000.0	1
35x24x15 EN 60715	98.360.0000.0	1
9708/2 S35	Z5.522.8553.0	100
WEF 1/35	Z5.523.9353.0	100
APFN 2,5 D2/2 GRÜN	07.312.7155.7	10
LELN 2,5/1 WEISS	05.564.3755.0	100
LELN 2,5/2 GRAU	05.564.3855.0	100
LELN 2,5/3 SCHWARZ	05.564.3955.0	100
ADFN 2,5/4 GELB	04.343.8353.8	10
DIN 5264 B 0,6x3,5	06.502.4000.0	5
DIN 5264 B 0,6x3,5 M	06.502.5000.0	10

Duo feed-through blocks with tension spring connection

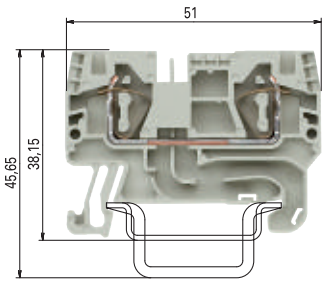

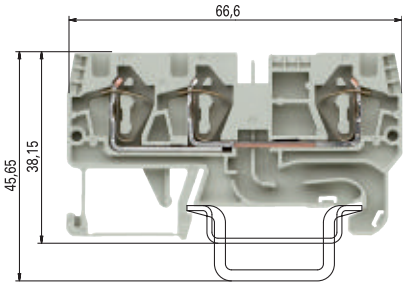

0344 Ⓔx II 2GD IM2
Ex e I/II
EN 60 947-7-1:2002
UL ratings field/factory wiring
CSA ratings
PTB 05 ATEX 1104 U1) EN 60 079-0/EN 60 079-7
Width Wire strip length
Approvals

WKFN 4 /35

fine-stranded	solid	V	A
0.13–4 mm²	0.13–6 mm²	800 V/8 kV/3	32
No. 24-10 AWG		600 V	30
No. 24-10 AWG		600 V	32
0.13–4 mm²	0.2–6 mm²	690 V	28/30[2]
6 mm			11 mm

VDE UL PTB

WKFN 4 D1/2/35

fine-stranded	solid	V	A
0.13–4 mm²	0.13–6 mm²	800 V/8 kV/3	32
No. 24-10 AWG		600 V	30
No. 24-10 AWG		600 V	32
0.13–4 mm²	0.2–6 mm²	550 V	28/30[2]
6 mm			11 mm

VDE UL PTB

		Type	Part No.	Std. Pack	Type	Part No.	Std. Pack
Feed-through block	gray	WKFN 4/35	56.704.0055.0	100	WKFN 4 D1/2/35	56.704.5055.0	100
Feed-through block	blue	WKFN 4/35 BLAU	56.704.0055.6	100	WKFN 4 D1/2/35 BLAU	56.704.5055.6	100
Supply block	gray						
Supply block	blue						
Accessories							
1. Mounting rail 35, 7.5 mm high	L = 2 m	35x27x7,5 EN 60715	98.300.0000.0	1	35x27x7,5 EN 60715	98.300.0000.0	1
Mounting rail 35, 15 mm high	L = 2 m	35x24x15 EN 60715	98.360.0000.0	1	35x24x15 EN 60715	98.360.0000.0	1
2. End clamp TS 35, with screw	8 mm wide	9708/2 S35	Z5.522.8553.0	100	9708/2 S35	Z5.522.8553.0	100
End clamp TS 35, without screw	8 mm wide	WEF 1/35	Z5.523.9353.0	100	WEF 1/35	Z5.523.9353.0	100
3. End plate	gray	APFN 4	07.312.9255.0	10	APFN 4 D1/2	07.312.9455.0	10
	blue	APFN 4 BLAU	07.312.9255.6	10	APFN 4 D1/2 BLAU	07.312.9455.6	10
Segment end plate	gray						
4. Partition plate	gray	TWFN 4	07.312.9355.0	10	TWFN 4 D1/2	07.312.9555.0	10
	blue	TWFN 4 BLAU	07.312.9355.6	10	TWFN 4 D1/2 BLAU	07.312.9555.6	10
5. Cross connector	2 pole	IVB WKF 4–2	Z7.261.1227.0	10	IVB WKF 4–2	Z7.261.1227.0	10
insulate	3 pole	IVB WKF 4–3	Z7.261.1327.0	10	IVB WKF 4–3	Z7.261.1327.0	10
	4 pole	IVB WKF 4–4	Z7.261.1427.0	10	IVB WKF 4–4	Z7.261.1427.0	10
	5 pole	IVB WKF 4–5	Z7.261.1527.0	10	IVB WKF 4–5	Z7.261.1527.0	10
	6 pole	IVB WKF 4–6	Z7.261.1627.0	10	IVB WKF 4–6	Z7.261.1627.0	10
	7 pole	IVB WKF 4–7	Z7.261.1727.0	20	IVB WKF 4–7	Z7.261.1727.0	20
	8 pole	IVB WKF 4–8	Z7.261.1827.0	20	IVB WKF 4–8	Z7.261.1827.0	20
	9 pole	IVB WKF 4–9	Z7.261.1927.0	20	IVB WKF 4–9	Z7.261.1927.0	20
	10 pole	IVB WKF 4–10	Z7.261.2027.0	20	IVB WKF 4–10	Z7.261.2027.0	20
6. Vertical Jumper, insulated	1 pole						
7. Wire entry guide	0,13–0,2 mm²	LEL 4/1 WEISS	05.561.8553.0	100	LEL 4/1 WEISS	05.561.8553.0	100
	0,25–0,5 mm²	LEL 4/2 GRAU	05.561.8653.0	100	LEL 4/2 GRAU	05.561.8653.0	100
	0,75–1,0 mm²	LEL 4/3 SCHWARZ	05.561.8753.0	100	LEL 4/3 SCHWARZ	05.561.8753.0	100
8. Cover with warning symbol over 4 blocks		ADF 4/4 GELB	04.343.6153.8	10	ADF 4/4 GELB	04.343.6153.8	10
9. Marking tag carrier, 2-fold							
10. Test adapter, modular		PS WKC/F	Z1.299.9753.0	10	PS WKC/F	Z1.299.9753.0	10
11. Test plug		ST 2/2,3	Z5.553.2921.0	10	ST 2/2,3	Z5.553.2921.0	10
12. Screwdriver, uninsulated		DIN 5264 B 0,6x3,5	06.502.4000.0	5	DIN 5264 B 0,6x3,5	06.502.4000.0	5
Screwdriver, uninsulated, MINI		DIN 5264 B 0,6x3,5 M	06.502.5000.0	10	DIN 5264 B 0,6x3,5 M	06.502.5000.0	10

Marking accessories see page 77–81

[1] Follow the Ex installation instructions.

[2] 1. value at 40 K / 2. value at 45 K

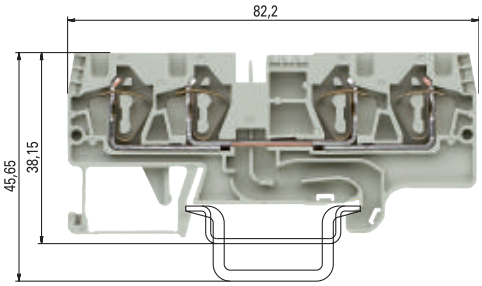

– Potential distribution with standard cross connector IVB WKF 4...

– Parallel connection of two cross connectors –> double jumpering

– Potential distributions are possible on one or both sides

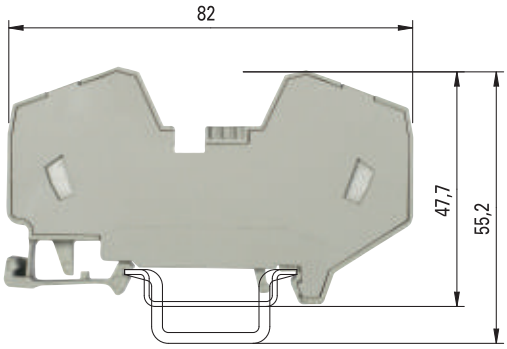

Potential distribution	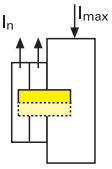		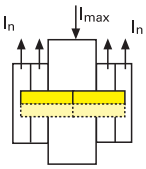	
Jumpering	one side		both sides	
	single	double	single	double
I_{max}	64	76	76	76
I_{Nblock}	32	32	32	32

$$I_{max} = \sum I_n \leq \sum I_{Nblock}$$

WKFN 4 D2/2/35

fine-stranded	solid	V	A
0.13–4 mm²	0.13–6 mm²	800 V/8 kV/3	32
No. 24-10 AWG		600 V	30
No. 24-10 AWG		600 V	32
0.13–4 mm²	0.2–6 mm²	550 V	28/30[2]
6 mm			11 mm

PTB

WKF 16/35 PV/WKFN

fine-stranded	solid/stranded	V	A
4–16 mm²	4–16 mm²	800 V/8 kV/3	76
No. 24-4 AWG		600 V	75
No. 12-4 AWG		600 V	78
4–16 mm²	4–16 mm²	690 V	64*
12 mm			15 mm

ATEX

Type	Part No.	Std. Pack
WKFN 4 D2/2/35	56.704.5155.0	100
WKFN 4 D2/2/35 BLAU	56.704.5155.6	100
35x27x7,5 EN 60715	98.300.0000.0	1
35x24x15 EN 60715	98.360.0000.0	1
9708/2 S35	Z5.522.8553.0	100
WEF 1/35	Z5.523.9353.0	100
APFN 4 D2/2	07.312.9055.0	10
APFN 4 D2/2 BLAU	07.312.9055.6	10
TWFN 4 D2/2	07.312.9155.0	10
TWFN 4 D2/2 BLAU	07.312.9155.6	10
IVB WKF 4–2	Z7.261.1227.0	10
IVB WKF 4–3	Z7.261.1327.0	10
IVB WKF 4–4	Z7.261.1427.0	10
IVB WKF 4–5	Z7.261.1527.0	10
IVB WKF 4–6	Z7.261.1627.0	10
IVB WKF 4–7	Z7.261.1727.0	20
IVB WKF 4–8	Z7.261.1827.0	20
IVB WKF 4–9	Z7.261.1927.0	20
IVB WKF 4–10	Z7.261.2027.0	20
LEL 4/1 WEISS	05.561.8553.0	100
LEL 4/2 GRAU	05.561.8653.0	100
LEL 4/3 SCHWARZ	05.561.8753.0	100
ADF 4/4 GELB	04.343.6153.8	10
PS WKC/F	Z1.299.9753.0	10
ST 2/2,3	Z5.553.2921.0	10
DIN 5264 B 0,6x3,5	06.502.4000.0	5
DIN 5264 B 0,6x3,5 M	06.502.5000.0	10

Type	Part No.	Std. Pack
WKF 16/35 PV/WKFN	56.716.0353.0	20
WKF 16/35 PV/WKFN BLAU	56.716.0353.6	20
35x27x7,5 EN 60715	98.300.0000.0	1
35x24x15 EN 60715	98.360.0000.0	1
9708/2 S35	Z5.522.8553.0	100
WEF 1/35	Z5.523.9353.0	100
IVB WKF 4–2	Z7.261.1227.0	10
IVB WKF 4–3	Z7.261.1327.0	10
IVB WKF 4–4	Z7.261.1427.0	10
IVB WKF 4–5	Z7.261.1527.0	10
IVB WKF 4–6	Z7.261.1627.0	10
IVB WKF 4–7	Z7.261.1727.0	20
IVB WKF 4–8	Z7.261.1827.0	20
IVB WKF 4–9	Z7.261.1927.0	20
IVB WKF 4–10	Z7.261.2027.0	20
ADF 16/4 GELB	04.343.6653.8	10
ST 2/2,3	Z5.553.2921.0	10
DIN 5264 B 1,0x5,5	06.502.4200.0	5

* Type-specific output currents upon request; KEMA 01 ATEX 2087 U[1]

Duo ground blocks with tension spring connection

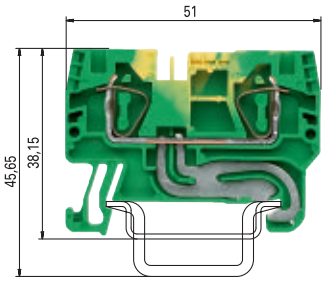

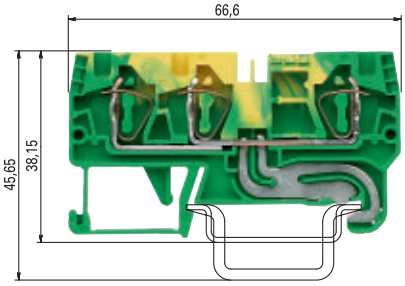

		WKFN 4 SL/35			WKFN 4 D1/2/SL/35		
0344 Ex II 2GD IM2		fine-stranded	solid	V	fine-stranded	solid	V
Ex e I/II		0.13–4 mm²	0.13–6 mm²	800 V/8 kV/3 [2]	0.13–4 mm²	0.13–6 mm²	800 V/8 kV/3 [2]
EN 60 947-7-2:2002		No. 24-10 AWG		600 V	No. 24-10 AWG		600 V
UL ratings	field/factory wiring	No. 24-10 AWG		600 V	No. 24-10 AWG		600 V
CSA ratings		0.13–4 mm²	0.2–6 mm²		0.13–4 mm²	0.2–6 mm²	
PTB 05 ATEX 1104 U1)	EN 60 079-0/EN 60 079-7						
Width	Wire strip length	6 mm		11 mm	6 mm		11 mm
Approvals		VDE UL PTB			VDE UL PTB		

		Type	Part No.	Std. Pack	Type	Part No.	Std. Pack
Ground block	green/yellow	WKFN 4 SL/35	56.704.9055.0	100	WKFN 4 D1/2/SL/35	56.704.9355.0	100
Accessories							
1. Mounting rail 35, 7.5 mm high	L = 2 m	35x27x7,5 EN 60715	98.300.0000.0	1	35x27x7,5 EN 60715	98.300.0000.0	1
Mounting rail 35, 15 mm high	L = 2 m	35x24x15 EN 60715	98.360.0000.0	1	35x24x15 EN 60715	98.360.0000.0	1
2. End clamp TS 35, with screw	8 mm wide	9708/2 S35	Z5.522.8553.0	100	9708/2 S35	Z5.522.8553.0	100
End clamp TS 35, without screw	8 mm wide	WEF 1/35	Z5.523.9353.0	100	WEF 1/35	Z5.523.9353.0	100
3. End plate	gray						
	blue						
	green	APFN 4 GRÜN	07.312.9255.7	10	APFN 4 D1/2 GRÜN	07.312.9455.7	10
4. Partition plate	gray						
	blue						
5. Cross connector	2 pole						
insulated	3 pole						
	4 pole						
	5 pole						
	6 pole						
	7 pole						
	8 pole						
	9 pole						
	10 pole						
6. Vertical cross connector, insulated	1 pole						
7. Wire entry guide	0,13–0,2 mm²	LEL 4/1 WEISS	05.561.8553.0	100	LEL 4/1 WEISS	05.561.8553.0	100
	0,25–0,5 mm²	LEL 4/2 GRAU	05.561.8653.0	100	LEL 4/2 GRAU	05.561.8653.0	100
	0,75–1,0 mm²	LEL 4/3 SCHWARZ	05.561.8753.0	100	LEL 4/3 SCHWARZ	05.561.8753.0	100
8. Cover with warning symbol over 4 blocks		ADF 4/4 GELB	04.343.6153.8	10	ADF 4/4 GELB	04.343.6153.8	10
9. Marking tag carrier, 2-fold							
10. Test adapter, modular							
11. Test plug		ST 2/2,3	Z5.553.2921.0	10	ST 2/2,3	Z5.553.2921.0	10
12. Screwdriver, uninsulated		DIN 5264 B 0,6x3,5	06.502.4000.0	5	DIN 5264 B 0,6x3,5	06.502.4000.0	5
Screwdriver, uninsulated, MINI		DIN 5264 B 0,6x3,5 M	06.502.5000.0	10	DIN 5264 B 0,6x3,5 M	06.502.5000.0	10
Marking accessories see page 77–81							

[1] Follow the Ex installation instructions.

[2] For the current-carrying capabilities of the mounting rails see AT catalog section ***facts*** & DATA.

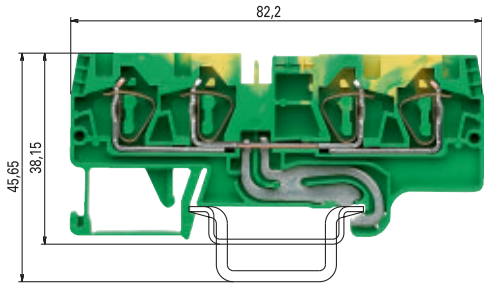

WKFN 4 D2/2/SL/35

fine-stranded	solid	V	A
0.13–4 mm²	0.13–6 mm²	800 V/8 kV/3	2)
No. 24-10 AWG		600 V	
No. 24-10 AWG		600 V	
0.13–4 mm²	0.2–6 mm²		
6 mm			11 mm

PTB

Type	Part No.	Std. Pack
WKFN 4 D2/2/SL/35	56.704.9155.0	100
35x27x7,5 EN 60715	98.300.0000.0	1
35x24x15 EN 60715	98.360.0000.0	1
9708/2 S35	Z5.522.8553.0	100
WEF 1/35	Z5.523.9353.0	100
APFN 4 D2/2 GRÜN	07.312.9055.7	10
LEL 4/1 WEISS	05.561.8553.0	100
LEL 4/2 GRAU	05.561.8653.0	100
LEL 4/3 SCHWARZ	05.561.8753.0	100
ADF 4/4 GELB	04.343.6153.8	10
PS WKC/F	Z1.299.9753.0	10
ST 2/2,3	Z5.553.2921.0	10
DIN 5264 B 0,6x3,5	06.502.4000.0	5
DIN 5264 B 0,6x3,5 M	06.502.5000.0	10

Duo feed-through blocks with tension spring connection

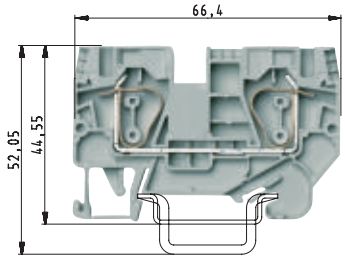

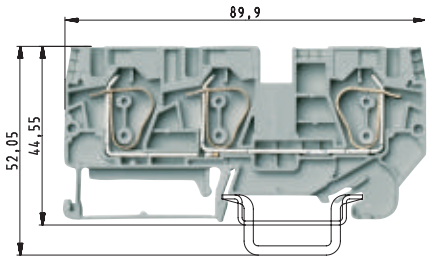

		WKFN 6/35				WKFN 6 D1/2/35			
0344 Ex II 2GD IM2		fine-stranded	solid	V	A	fine-stranded	solid	V	A
Ex e I/II		0.2–6 mm²	1.5–10 mm²	800 V/8 kV/3	41	0.2–6 mm²	1.5–10 mm²	800 V/8 kV/3	41
EN 60 947-7-1:2002		No. 24-8 AWG		600 V	50	No. 24-8 AWG		600 V	50
UL ratings	field/factory wiring	No. 24-8 AWG		600 V	41	No. 24-8 AWG		600 V	41
CSA ratings		0.2–6 mm²	1.5–10 mm²	550 V	39/41*	0.2–6 mm²	1.5–10 mm²	550 V	39/41*
PTB 06 ATEX 1075 U[1]	EN 60 079-0/EN 60 079-7	8 mm			12 mm	8 mm			12 mm
Width	Wire strip length								
Approvals		VDE UL CSA PTB				VDE UL CSA PTB			

		Type	Part No.	Std. Pack	Type	Part No.	Std. Pack
Feed-through block	gray	WKFN 6/35	56.706.0055.0	100	WKFN 6 D1/2/35	56.706.5055.0	100
Feed-through block	blue	WKFN 6/35 BLAU	56.706.0055.6	100	WKFN 6 D1/2/35 BLAU	56.706.5055.6	100
Ground block	green/yellow						
Accessories							
1. Mounting rail 35, 7.5 mm high	L = 2 m	35x27x7,5 EN 60715	98.300.0000.0	1	35x27x7,5 EN 60715	98.300.0000.0	1
Mounting rail 35, 15 mm high	L = 2 m	35x24x15 EN 60715	98.360.0000.0	1	35x24x15 EN 60715	98.360.0000.0	1
2. End clamp TS 35, with screw	8 mm wide	9708/2 S35	Z5.522.8553.0	100	9708/2 S35	Z5.522.8553.0	100
End clamp TS 35, without screw	8 mm wide	WEF 1/35	Z5.523.9353.0	100	WEF 1/35	Z5.523.9353.0	100
3. End plate	gray	APFN 6	07.313.0455.0	10	APFN 6 D1/2	07.313.0655.0	10
	blue	APFN 6 BLAU	07.313.0455.6	10	APFN 6 D1/2 BLAU	07.313.0655.6	10
	green						
4. Partition plate	gray	TWFN 6	07.313.0555.0	10	TWFN 6 D1/2	07.313.0755.0	10
	blue	TWFN 6 BLAU	07.313.0555.6	10	TWFN 6 D1/2 BLAU	07.313.0755.6	10
5. Cross connector	2 pole	IVB WKFN 6–2	Z7.282.5227.0	10	IVB WKFN 6–2	Z7.282.5227.0	10
insulated	3 pole	IVB WKFN 6–3	Z7.282.5327.0	10	IVB WKFN 6–3	Z7.282.5327.0	10
	4 pole	IVB WKFN 6–4	Z7.282.5427.0	10	IVB WKFN 6–4	Z7.282.5427.0	10
	5 pole	IVB WKFN 6–5	Z7.282.5527.0	10	IVB WKFN 6–5	Z7.282.5527.0	10
	6 pole						
	7 pole						
	8 pole						
	9 pole						
	10 pole						
6. Reducing jumper, WKF 35 to WKFN 10							
Reducing jumper, WKF 35 to WKFN 16							
Reducing jumper, WKFN 16 to WKFN 10							
7. Cover with warning symbol for 4 terminals		ADF 6/4 GELB	04.343.6253.8	10	ADF 6/4 GELB	04.343.6253.8	10
8. Test adapter modular							
9. Test plug		ST 2/2,3	Z5.553.2921.0	10	ST 2/2,3	Z5.553.2921.0	10
10. Screwdriver, uninsulated		DIN 5264 B 0,8x4	06.502.4100.0	5	DIN 5264 B 0,8x4	06.502.4100.0	5
Marking accessories see page 77–81							

[1] Follow the Ex installation instructions.
* 1. value at 40 K/2. value at 45 K

[2] For the current-carrying capabilities of the mounting rails see AT catalog section ***facts*** & DATA.
** When cross connectors are used according to EN 60079-0 and EN 60079-7, the current must be reduced to max. 3.5 A.

Duo ground blocks with tension spring connection

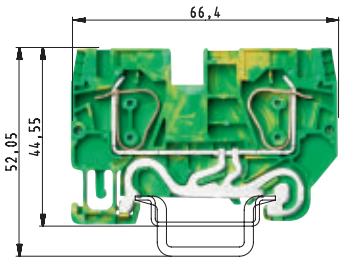

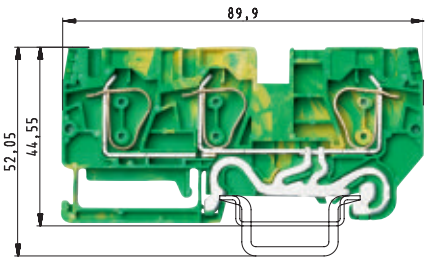

WKFN 6 SL/35

fine-stranded solid V A
0.2–6 mm² 1.5–10 mm² 800 V/8 kV/3
No. 24-8 AWG 600 V
No. 24-8 AWG 600 V
0.2–6 mm² 1.5–10 mm²
8 mm 12 mm

WKFN 6 D1/2/SL/35

fine-stranded solid V A
0.2–6 mm² 1.5–10 mm² 800 V/8 kV/3
No. 24-8 AWG 600 V 50
No. 24-8 AWG 600 V
0.2–6 mm² 1.5–10 mm²
8 mm 12 mm

Type	Part No.	Std. Pack	Type	Part No.	Std. Pack
WKFN 6 SL/35	56.706.9055.0	100	WKFN 6 D1/2/SL/35	56.706.9355.0	100
35x27x7,5 EN 60715	98.300.0000.0	1	35x27x7,5 EN 60715	98.300.0000.0	1
35x24x15 EN 60715	98.360.0000.0	1	35x24x15 EN 60715	98.360.0000.0	1
9708/2 S35	Z5.522.8553.0	100	9708/2 S35	Z5.522.8553.0	100
WEF 1/35	Z5.523.9353.0	100	WEF 1/35	Z5.523.9353.0	100
APFN 6 GRÜN	07.313.0455.7	10	APFN 6 D1/2 GRÜN	07.313.0655.7	10
IVB WKFN 6–2	Z7.282.5227.0	10	IVB WKFN 6–2	Z7.282.5227.0	10
IVB WKFN 6–3	Z7.282.5327.0	10	IVB WKFN 6–3	Z7.282.5327.0	10
IVB WKFN 6–4	Z7.282.5427.0	10	IVB WKFN 6–4	Z7.282.5427.0	10
IVB WKFN 6–5	Z7.282.5527.0	10	IVB WKFN 6–5	Z7.282.5527.0	10
ADF 6/4 GELB	04.343.6253.8	10	ADF 6/4 GELB	04.343.6253.8	10
ST 2/2,3	Z5.553.2921.0	10	ST 2/2,3	Z5.553.2921.0	10
DIN 5264 B 0,8x4	06.502.4100.0	5	DIN 5264 B 0,8x4	06.502.4100.0	5

Duo feed-through blocks with tension spring connection

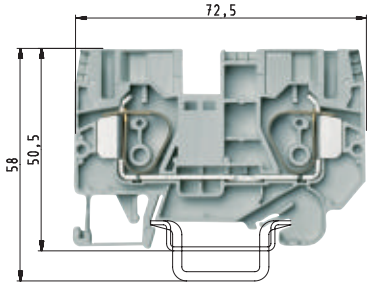

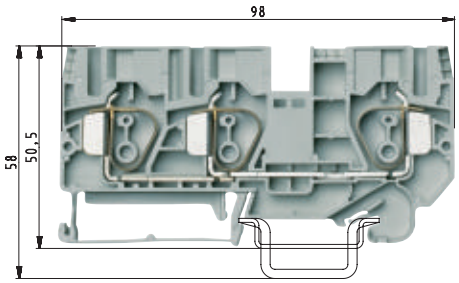

		WKFN 10/35				WKFN 10 D1/2/35			
0344 Ex II 2GD IM2		fine-stranded	solid/stranded	V	A	fine-stranded	solid/stranded	V	A
Ex e I/II		0.2–10 mm²	1.5–16 mm²	800 V/8 kV/3	57	0.2–10 mm²	1.5–16 mm²	800 V/8 kV/3	57
EN 60 947-7-1:2002		No. 16-6 AWG		600 V	60	No. 16-6 AWG		600 V	60
UL ratings	field/factory wiring	No. 16-6 AWG		600 V	65	No. 16-6 AWG		600 V	65
CSA ratings		0.2–10 mm²	1.5–16 mm²	550 V	52/57*	0.2–10 mm²	1.5–16 mm²	550 V	52/57*
PTB 06 ATEX 1075 U[1]	EN 60 079-0/EN 60 079-7								
Width	Wire strip length	10 mm			15 mm	10 mm			15 mm
Approvals		VDE UL CSA PTB				VDE UL CSA PTB			

		Type	Part No.	Std. Pack	Type	Part No.	Std. Pack
Feed-through block	gray	WKFN 10/35	56.710.0055.0	50	WKFN 10 D1/2/35	56.710.5055.0	50
Feed-through block	blue	WKFN 10/35 BLAU	56.710.0055.6	50	WKFN 10 D1/2/35 BLAU	56.710.5055.6	50
Ground block	green/yellow						
Accessories							
1. Mounting rail 35, 7.5 mm high	L = 2 m	35x27x7,5 EN 60715	98.300.0000.0	1	35x27x7,5 EN 60715	98.300.0000.0	1
Mounting rail 35, 15 mm high	L = 2 m	35x24x15 EN 60715	98.360.0000.0	1	35x24x15 EN 60715	98.360.0000.0	1
2. End clamp TS 35, with screw	8 mm wide	9708/2 S35	Z5.522.8553.0	100	9708/2 S35	Z5.522.8553.0	100
End clamp TS 35, without screw	8 mm wide	WEF 1/35	Z5.523.9353.0	100	WEF 1/35	Z5.523.9353.0	100
3. End plate	gray	APFN 10	07.313.0855.0	10	APFN 10 D1/2	07.313.1055.0	10
	blue	APFN 10 BLAU	07.313.0855.6	10	APFN 10 D1/2 BLAU	07.313.1055.6	10
	green						
4. Partition plate	gray	TWFN 10	07.313.0955.0	10	TWFN 10 D1/2	07.313.1155.0	10
	blue	TWFN 10 BLAU	07.313.0955.6	10	TWFN 10 D1/2 BLAU	07.313.1155.6	10
5. Cross connector	2 pole	IVB WKF 10–2	Z7.283.8227.0	10	IVB WKF 10–2	Z7.283.8227.0	10
insulated	3 pole						
	4 pole						
	5 pole						
	6 pole						
	7 pole						
	8 pole						
	9 pole						
	10 pole						
6. Reducing jumper, WKF 35 to WKFN 10[3]		IVB WKFN 35R10	Z7.285.6427.0	10	IVB WKFN 35R10	Z7.285.6427.0	10
Reducing jumper, WKF 35 to WKFN 16[3]							
Reducing jumper, WKFN 16 to WKFN 10[3]		IVB WKFN 16R10	Z7.284.4327.0	10	IVB WKFN 16R10	Z7.284.4327.0	10
7. Cover with warning symbol for 4 terminals		ADF 10/4 GELB	04.343.6453.8	10	ADF 10/4 GELB	04.343.6453.8	10
8. Test adapter modular							
9. Test plug		ST 2/2,3	Z5.553.2921.0	10	ST 2/2,3	Z5.553.2921.0	10
10. Screwdriver, uninsulated		DIN 5264 B 1x5,5	06.502.4200.0	5	DIN 5264 B 1x5,5	06.502.4200.0	5
Marking accessories see page. 77–81							

[1] Follow the Ex installation instructions. [2] For the current-carrying capabilities of the mounting rails see AT catalog section ***facts*** & DATA. [3] Pls. note that the current must be reduced for EX applications.
* 1. value at 40 K/2. value at 45 K ** When cross connectors are used acc. to EN 60079-0 and EN 60079-7 the current must be reduced to 4 A/40 K or 5 A/45 K for type WKFN 10/35.

Duo ground blocks with tension spring connection

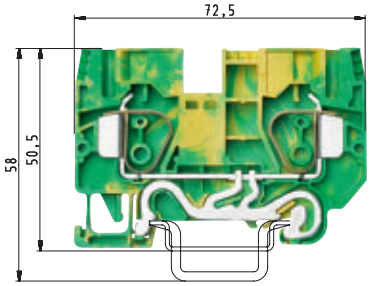

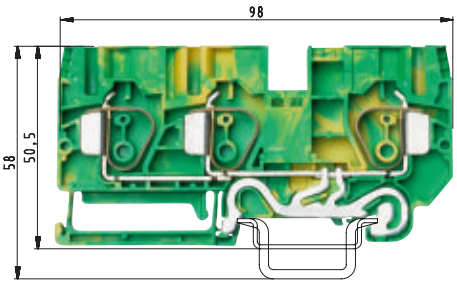

WKFN 10 SL/35

fine-stranded	solid/stranded	V	A
0.2–10 mm²	1.5–16 mm²	800 V/8 kV/3	2)
No. 16-6 AWG		600 V	
No. 16-6 AWG		600 V	
0.2–10 mm²	1.5–16 mm²		
10 mm			15 mm

WKFN 10 D1/2/SL/35

fine-stranded	solid/stranded	V	A
0.2–10 mm²	1.5–16 mm²	800 V/8 kV/3	2)
No. 16-6 AWG		600 V	
0.2–10 mm²	1.5–16 mm²		
10 mm			15 mm

Type	Part No.	Std. Pack	Type	Part No.	Std. Pack
WKFN 10 SL/35	56.710.9055.0	50	WKFN 10 D1/2/SL/35	56.710.9355.0	50
35x27x7,5 EN 60715	98.300.0000.0	1	35x27x7,5 EN 60715	98.300.0000.0	1
35x24x15 EN 60715	98.360.0000.0	1	35x24x15 EN 60715	98.360.0000.0	1
9708/2 S35	Z5.522.8553.0	100	9708/2 S35	Z5.522.8553.0	100
WEF 1/35	Z5.523.9353.0	100	WEF 1/35	Z5.523.9353.0	100
APFN 10 GRÜN	07.313.0855.7	10	APFN 10 D1/2 GRÜN	07.313.1055.7	10
IVB WKF 10–2	Z7.283.8227.0	10	IVB WKF 10–2	Z7.283.8227.0	10
ADF 10/4 GELB	04.343.6453.8	10	ADF 10/4 GELB	04.343.6453.8	10
ST 2/2,3	Z5.553.2921.0	10	ST 2/2,3	Z5.553.2921.0	10
DIN 5264 B 1x5,5	06.502.4200.0	5	DIN 5264 B 1x5,5	06.502.4200.0	5

Duo feed-through blocks with tension spring connection

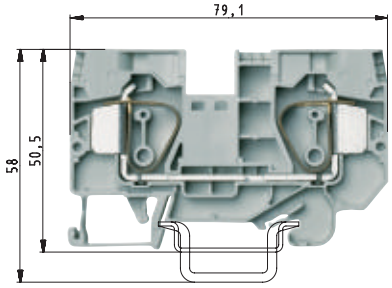

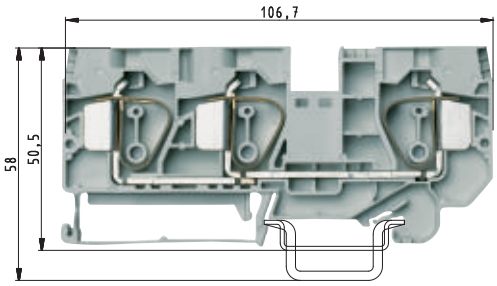

		WKFN 16/35				WKFN 16 D1/2/35			
0344 Ⓔx II 2GD IM2		fine-stranded	solid/stranded	V	A	fine-stranded	solid/stranded	V	A
Ex e I/II		0.2–16 mm²	1.5–25 mm²	800 V/8 kV/3	76	0.2–16 mm²	1.5–25 mm²	800 V/8 kV/3	76
EN 60 947-7-1:2002		No. 16-4 AWG		600 V	85	No. 16-4 AWG		600 V	85
UL ratings	field/factory wiring	No. 16-4 AWG		600 V	85	No. 16-4 AWG		600 V	85
CSA ratings		0.2–16 mm²	1.5–25 mm²	550 V	74/76*	0.2–16 mm²	1.5–25 mm²	550 V	74/76*
PTB 06 ATEX 1075 U[1]	EN 60 079-0/EN 60 079-7								
Width	Wire strip length	12 mm			16 mm	12 mm			16 mm
Approvals		VDE UL CSA PTB				VDE UL CSA PTB			

		Type	Part No.	Std. Pack	Type	Part No.	Std. Pack
Feed-through block	gray	WKFN 16/35	56.716.0055.0	50	WKFN 16 D1/2/35	56.716.5055.0	50
Feed-through block	blue	WKFN 16/35 BLAU	56.716.0055.6	50	WKFN 16 D1/2/35 BLAU	56.716.5055.6	50
Ground block	green/yellow						
Accessories							
1. Mounting rail 35, 7.5 mm high	L = 2 m	35x27x7,5 EN 60715	98.300.0000.0	1	35x27x7,5 EN 60715	98.300.0000.0	1
Mounting rail 35, 15 mm high	L = 2 m	35x24x15 EN 60715	98.360.0000.0	1	35x24x15 EN 60715	98.360.0000.0	1
2. End clamp TS 35, with screw	8 mm wide	9708/2 S35	Z5.522.8553.0	100	9708/2 S35	Z5.522.8553.0	100
End clamp TS 35, without screw	8 mm wide	WEF 1/35	Z5.523.9353.0	100	WEF 1/35	Z5.523.9353.0	100
3. End plate	gray	APFN 16	07.313.1255.0	10	APFN 16 D1/2	07.313.1455.0	10
	blue	APFN 16 BLAU	07.313.1255.6	10	APFN 16 D1/2 BLAU	07.313.1455.6	10
	green						
4. Partition plate	gray	TWFN 16	07.313.1355.0	10	TWFN 16 D1/2	07.313.1555.0	10
	blue	TWFN 16 BLAU	07.313.1355.6	10	TWFN 16 D1/2 BLAU	07.313.1555.6	10
5. Cross connector**	2 pole	IVB WKF 16–2	Z7.284.4227.0	10	IVB WKF 16–2	Z7.284.4227.0	10
insulated	3 pole						
	4 pole						
	5 pole						
	6 pole						
	7 pole						
	8 pole						
	9 pole						
	10 pole						
6. Reducing jumper, WKF 35 to WKFN 10							
Reducing jumper, WKF 35 to WKFN 16		IVB WKFN 35R16	Z7.285.6527.0	10	IVB WKFN 35R16	Z7.285.6527.0	10
Reducing jumper, WKFN 16 to WKFN 10		IVB WKFN 16R10	Z7.284.4327.0	10	IVB WKFN 16R10	Z7.284.4327.0	10
7. Cover with warning symbol for 4 terminals		ADF 16/4 GELB	04.343.6653.8	10	ADF 16/4 GELB	04.343.6653.8	10
8. Test adapter modular							
9. Test plug		ST 2/2,3	Z5.553.2921.0	10	ST 2/2,3	Z5.553.2921.0	10
10. Screwdriver, uninsulated		DIN 5264 B 1x5,5	06.502.4200.0	5	DIN 5264 B 1x5,5	06.502.4200.0	5
Marking accessories see page 77–81							

[1] Follow the Ex installation instructions
* 1. value at 40 K/2. value at 45 K

[2] For the current-carrying capabilities of the mounting rails see AT catalog section ***facts*** & DATA.
** When cross connectors are used according to EN 60079-0 and EN 60079-7, the current must be reduced to max. 3.5 A.

Duo ground blocks with tension spring connection

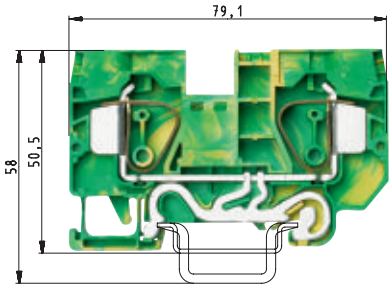

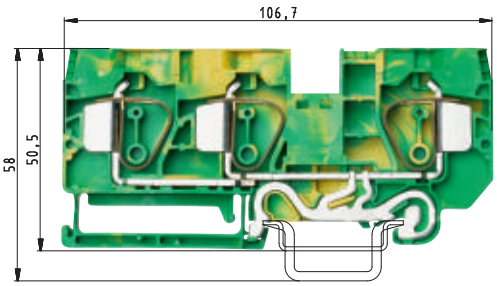

WKFN 16 SL/35

fine-stranded	solid/stranded	V	A
0.2–16 mm²	1.5–25 mm²	800 V/8 kV/3	2)
No. 16-4 AWG		600 V	
No. 16-4 AWG		600 V	
0.2–16 mm²	1.5–25 mm²		
12 mm			16 mm

WKFN 16 D1/2/SL/35

fine-stranded	solid/stranded	V	A
0.2–16 mm²	1.5–25 mm²	800 V/8 kV/3	2)
No. 16-4 AWG		600 V	
0.2–16 mm²	1.5–25 mm²		
12 mm			16 mm

Type	Part No.	Std. Pack	Type	Part No.	Std. Pack
WKFN 16 SL/35	56.716.9055.0	50	WKFN 16 D1/2/SL/35	56.716.9355.0	50
35x27x7,5 EN 60715	98.300.0000.0	1	35x27x7,5 EN 60715	98.300.0000.0	1
35x24x15 EN 60715	98.360.0000.0	1	35x24x15 EN 60715	98.360.0000.0	1
9708/2 S35	Z5.522.8553.0	100	9708/2 S35	Z5.522.8553.0	100
WEF 1/35	Z5.523.9353.0	100	WEF 1/35	Z5.523.9353.0	100
APFN 16 GRÜN	07.313.1255.7	10	APFN 16 D1/2 GRÜN	07.313.1455.7	10
IVB WKF 16–2	Z7.284.4227.0	10	IVB WKF 16–2	Z7.284.4227.0	10
ADF 16/4 GELB	04.343.6653.8	10	ADF 16/4 GELB	04.343.6653.8	10
ST 2/2,3	Z5.553.2921.0	10	ST 2/2,3	Z5.553.2921.0	10
DIN 5264 B 1x5,5	06.502.4200.0	5	DIN 5264 B 1x5,5	06.502.4200.0	5

Duo feed-through block/ground block with tension spring connection

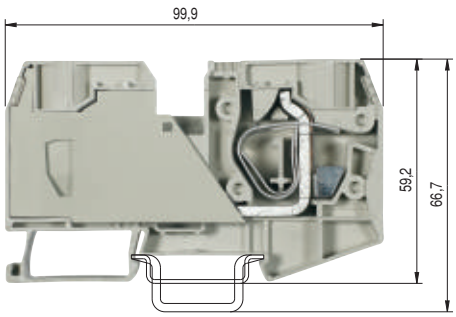

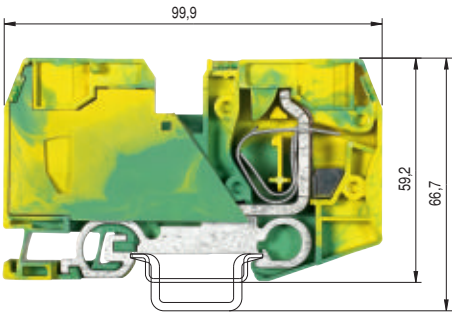

		WKF 35/35				WKF 35 SL/35			
0344 Ex II 2GD		fine-stranded	solid/stranded	V	A	fine-stranded	solid/stranded	V	A
Ex e II		2.5–35 mm²	2.5–35 mm²	800 V/8 kV/3	125	2.5–35 mm²	2.5–35 mm²	800 V/8 kV/3[4]	[3]
EN 60 947-7-1:2002		No. 12-2 AWG		600 V	115	No. 12-2 AWG		600 V	
UL ratings	field/factory wiring	No. 12-2 AWG		600 V	115	No. 12-2 AWG		600 V	
CSA ratings		2.5–35 mm²	2.5–35 mm²	690 V	92/108 [5]	2.5–35 mm²	2.5–35 mm²		
KEMA 03 ATEX 2057 U[1]	EN 60 079-0/EN 60 079-7								
Width	Wire strip length	16 mm			18 mm	16 mm			18 mm
Approvals		ATEX				ATEX			

		Type	Part No.	Std. Pack	Type	Part No.	Std. Pack
Feed-through block	gray	WKF 35/35	56.735.0053.0	10			
Feed-through block	blue	WKF 35/35 BLAU	56.735.0053.6	10			
Ground block	green/yellow				WKF 35 SL/35	56.735.9053.0	10
Accessories							
1. Mounting rail 35, 7.5 mm high	L = 2 m	35x27x7,5 EN 60715	98.300.0000.0	1	35x27x7,5 EN 60715	98.300.0000.0	1
Mounting rail 35, 15 mm high	L = 2 m	35x24x15 EN 60715	98.360.0000.0	1	35x24x15 EN 60715	98.360.0000.0	1
2. End clamp TS 35, with screw[2]	8 mm wide	9708/2 S35	Z5.522.8553.0	100	9708/2 S35	Z5.522.8553.0	100
End clamp TS 35, without screw	8 mm wide						
3. End plate	gray						
	blue						
	green						
4. Partition plate	gray						
	blue						
5. Cross connector	2 pole	IVB WKF 35–2	Z7.285.6227.0	10	IVB WKF 35–2	Z7.285.6227.0	10
insulated	3 pole						
	4 pole						
	5 pole						
	6 pole						
	7 pole						
	8 pole						
	9 pole						
	10 pole						
6. Reducing jumper, WKF 35 to WKFN 10[6]		IVB WKFN 35R10	Z7.285.6427.0	10			
Reducing jumper, WKF 35 to WKFN 16[6]		IVB WKFN 35R16	Z7.285.6527.0	10			
Reducing jumper, WKFN 16 to WKFN 10[6]		IVB WKFN 16R10	Z7.284.4327.0	10			
7. Cover with warning symbol for 4 terminals		ADF 35/5 GELB	04.343.9253.8	10	ADF 35/5 GELB	04.343.9253.8	10
8. Test adapter modular							
9. Test plug		ST 2/2,3	Z5.553.2921.0	10	ST 2/2,3	Z5.553.2921.0	10
10. Screwdriver, uninsulated		DIN 5264 B 1x5,5	06.502.4200.0	5	DIN 5264 B 1x5,5	06.502.4200.0	5
Marking accessories see page 77–81							

[1] Follow the Ex installation instructions
[2] Do not use in Ex environments.
[3] For the current-carrying capabilities of the mounting rails see AT catalog section ***facts*** & DATA.
[4] Ratings to adjacent feed-through blocks of the same series and size
[5] with/without jumper
[6] When cross connectors are used acc. to EN 60079-0 and EN 60079-7 the current must be reduced (values to be requested)

Potential supply with feed-through blocks up to 35 mm²

$I_{max\ E}$: $I_{max.\ supply}$
$I_{max\ R}$: $I_{reducing\ cross\ connector}$
$I_{N\text{-}A}$: $I_{N\ output\ terminal\ block}$

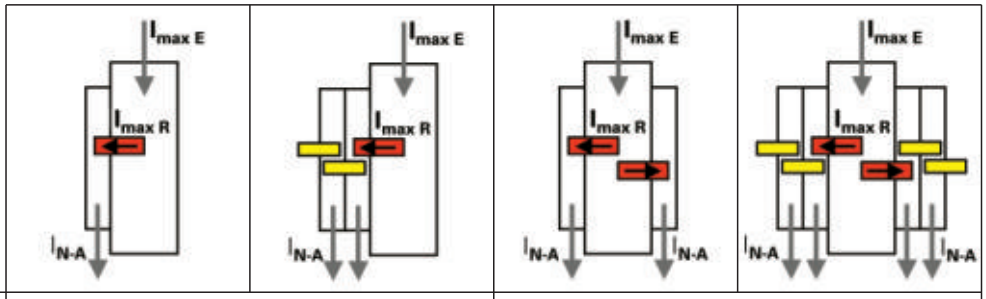

Potential distribution		Distribution on one side		Distribution on both sides	
		2 poles	several poles	2 poles	several poles
35-R-10	$I_{max.\ supply}$	125 A	125 A	125 A	125 A
	$I_{max.\ reducing\ cross\ connector}$	57 A	105 A	57 A	105 A
	$I_{N\ output\ terminal\ block}$	57 A	57 A	57 A	57 A
35-R-16	$I_{max.\ supply}$	125 A	125 A	125 A	125 A
	$I_{max.\ reducing\ cross\ connector}$	76 A	105 A	76 A	105 A
	$I_{N\ output\ terminal\ block}$	76 A	76 A	76 A	76 A
16-R-10	$I_{max.\ supply}$	76 A	76 A	–	–
	$I_{max.\ reducing\ cross\ connector}$	57 A	76 A	–	–
	$I_{N\ output\ terminal\ block}$	57 A	57 A	–	–

	Function	Type	Part No.	Std. Pack
Potential distribution 35 R 10	Supply block	WKF 35 /35	56.735.0035.0	10
	Supply block	WKF 35 /35 BLAU	56.735.0035.6	10
Potential supply 35 mm²	Reducing cross connector	IVB WKFN 35R10	Z7.285.6427.0	10
Reducing cross connector 35R10				
Potential output 10 mm²	Output block	WKFN 10 /35	56.710.0055.0	10
	Output block	WKFN 10 /35 BLAU	56.710.0055.6	10
	Output block	WKFN 10 D1/2/35	56.710.5055.0	10
	Output block	WKFN 10 D1/2/35 BLAU	56.710.5055.6	10
Potential distribution 35 R 16	Supply block	WKF 35 /35	56.735.0035.0	10
	Supply block	WKF 35 /35 BLAU	56.735.0035.6	10
Potential supply 35 mm²	Reducing cross connector	IVB WKFN 35R16	Z7.285.6527.0	10
Reducing cross connector 35R16				
Potential output 16 mm²	Output block	WKFN 16 /35	56.716.0055.0	10
	Output block	WKFN 16 /35 BLAU	56.716.0055.6	10
	Output block	WKFN 16 D1/2/35	56.716.5055.0	10
	Output block	WKFN 16 D1/2/35 BLAU	56.716.5055.6	10
Potential distribution 16 R 10	Supply block	WKFN 16 /35	56.716.0055.0	10
	Supply block	WKFN 16 /35 BLAU	56.716.0055.6	10
	Supply block	WKFN 16 D1/2/35	56.716.5055.0	10
Potential supply 16 mm²	Supply block	WKFN 16 D1/2/35 BLAU	56.716.5055.6	10
Reducing cross connector 16R10				
Potential output 10 mm²	Reducing cross connector	IVB WKFN 35R16	Z7.285.6527.0	10
	Output block	WKFN 16 /35	56.716.0055.0	10
	Output block	WKFN 16 /35 BLAU	56.716.0055.6	10
	Output block	WKFN 16 D1/2/35	56.716.5055.0	10
	Output block	WKFN 16 D1/2/35 BLAU	56.716.5055.6	10

DIN rail terminal blocks with tension spring connection

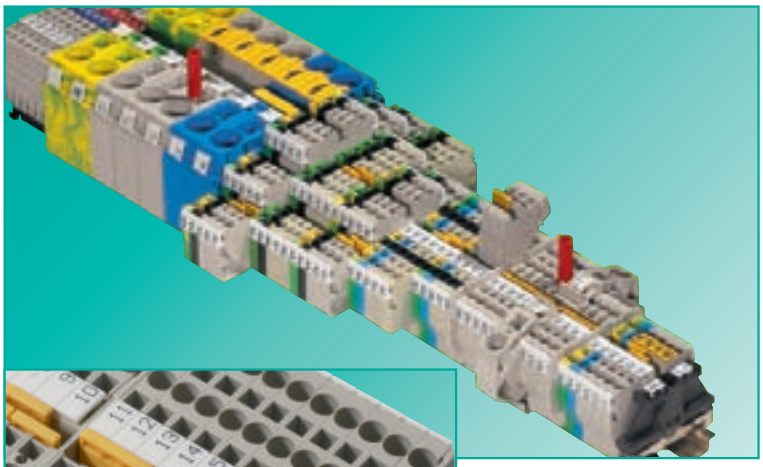

Power and potential distribution

With our ***fasis*** WKFN DIN rail terminal block system we focus on the application's system and flexibility. This mainly pays off in power and potential distribution.

fasis WKFN is consistently equipped with a two-channel jumpering system. Using standard cross connectors the potential can be distributed from the supply block to other DIN rail terminal blocks of type WKFN 2,5 and WKFN 4. Reducing jumpers for terminal blocks larger than 10 mm² are available as accessories for the distribution of high currents. Later extensions of the distribution system are not a problem and can be implemented quickly and flexibly!

What has proven for the termination point of the DIN rail terminal block is continued for the cross connectors, meaning we isolate the electrical and mechanical functions so that the electrical connections durably function as required and contribute to your system's operational safety.

comfort jump

Jumpering the terminal blocks on two channels

Benefits:

- Power performance through parallel supply of the electrical power
- Flexible potential distribution through staggered and chained arrangement of the cross connectors
- Cost reduction in stockkeeping due to standardized variations (preferred number of poles)

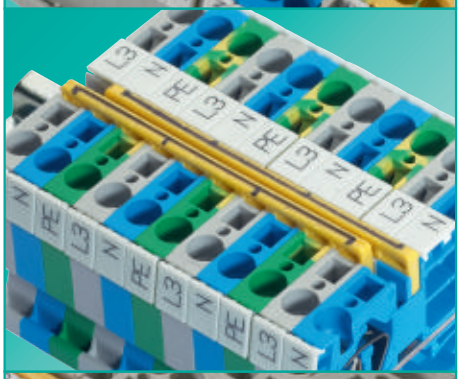

link jump

Easy potential interconnection

Benefits:

- Individual interconnection of potentials on the terminal block assembly
- Simply notch through pre-defined cutting edge
- Colored marking of the power circuit with pre-defined marking options

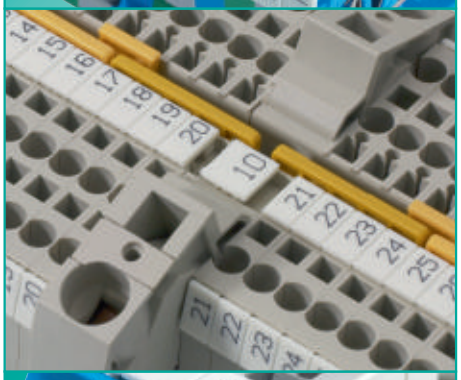

smart jump

Easy potential distribution

Benefits:

- Compact and closed design of supply block WKF 16/35 PV/ WKFN for wires up to 16 mm²
- Parallel power distribution on one side or both sides to WKFN standard DIN rail terminal blocks
- Power distribution to WKFN 4 or WKFN 2,5 with standard cross connectors IVB WKF 4 or 2,5

power jump

Supply power up to 125 A

Benefits:

- Standard DIN rail terminal blocks WKFN 16 and 35 as supply block up to 50 mm²
- Power distribution through reducing jumpers from
  WKF 35 to WKFN 16
  WKF 35 to WKFN 10
  WKFN 16 to WKFN 10

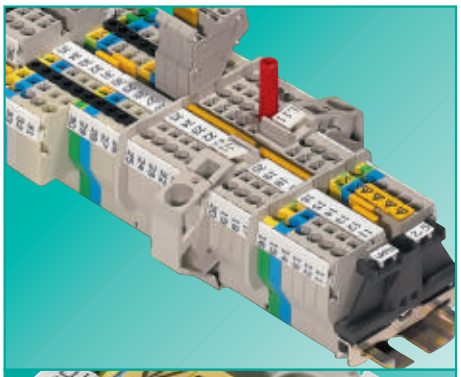

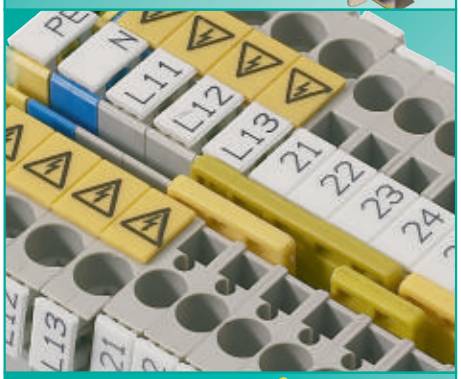

Function

Durably and safe "jumpering"

- The DIN rail terminal blocks with tension spring connection of the ***fasis*** product series can be "jumpered" using insulated cross connectors without screws.
- IP 20 protection against accidental contact is guaranteed even for inserted cross connectors.
- Isolation of the electrical and mechanical functions enables an optimal selection of materials without any compromise.
- The current-carrying bar makes it possible to apply the DIN rail terminal block's rated current to the cross connector.
- The contact spring balances the thermal cold flow properties of the current-carrying bar and thus ensures a durable electrical connection.
- Special alloys ensure a low contact resistance and a gastight contact area
  – Current-carrying bar: tin-plated copper
  – Contact spring: stainless CrNi steel

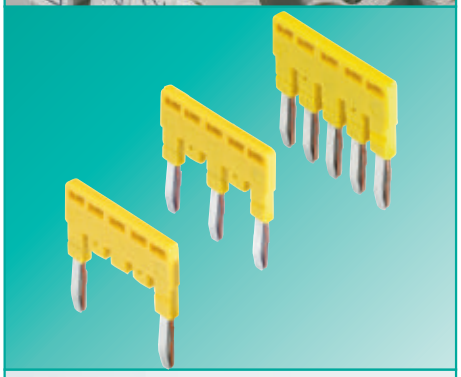

Application

Jumping with a system

- For the **smart jump** potential distribution insulated cross connectors in 2 to 20 pole designs are available.
- „Jumping" cross connectors are available to interconnect non-adjacent potentials to **link jump**.
- The **power jump** power distribution up to 125 A is implemented using reducing cross connectors – see page 29.

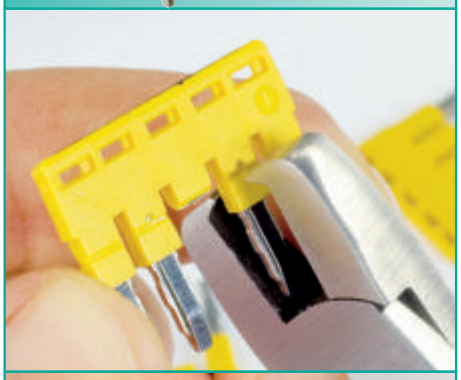

Pre-assembly

"Jumping" and distributing potentials

- The jumping potential interconnection is created with notched cross connectors.
- The notched cross connectors
  – can be prepared by the user as required for the application by using the Wieland notching tool, or
  – can be purchased already pre-assembled from Wieland.
- Staggered jumpering with notched cross connectors is only possible with the ***fasis*** WKFN series.

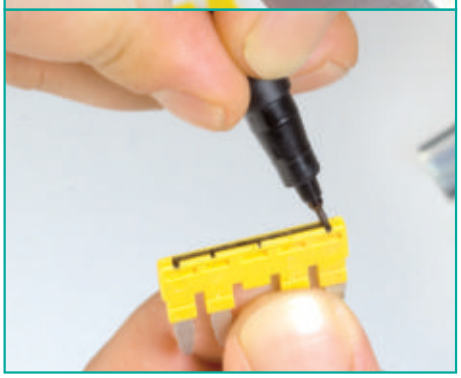

Flexibility

Individually notched cross connectors

- The notched cross connectors are prepared individually using the AKW/A notching tool.
- In order to easily cut out individual poles the cross connectors provide a pre-defined cutting edge.
- Notched cross connectors will reduce the rated voltage to 400 V.
- All cross connectors with several poles provide a pre-defined marking space which enables colored marking of the current and signal flow.

Multi-tier terminal blocks with tension spring connection

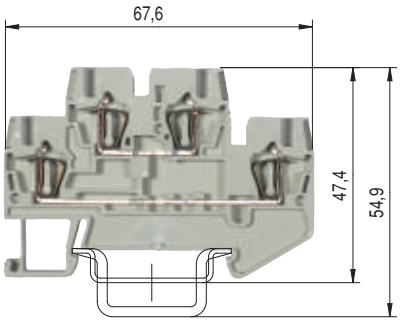

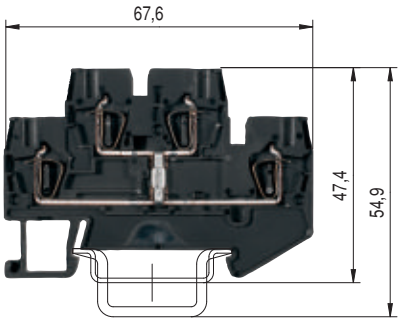

0344 Ⓔx II 2GD
Ex e II
EN 60 947-7-1:2002
UL ratings field/factory wiring
CSA ratings
KEMA 03 ATEX 2056 U[1] EN 60 079-0/EN 60 079-7
Width Wire strip length
Approvals

WKF 1,5 E2/35

fine-stranded	solid	V	A
0.08–1,5 mm²	0.08–1.5 mm²	500 V/6 kV/3	17,5
No. 26-14 AWG		300 V	15
No. 26-14 AWG		300 V	15
0.14–1,5 mm²	0.14–1.5 mm²	440 V*)	15/13,5[3]
4 mm			10 mm

ATEX cULus CSA

WKF 1,5 E2/VB/35

fine-stranded	solid	V	A
0.08–1,5 mm²	0.08–1.5 mm²	500 V/6 kV/3	17,5
No. 26-14 AWG		300 V	15
No. 26-14 AWG		300 V	15
0.14–1.5 mm²	0.14–1.5 mm²	440 V*)	15/13,5[3]
4 mm			10 mm

ATEX cULus CSA

		Type	Part No.	Std. Pack	Type	Part No.	Std. Pack
Multi-tier block	gray	WKF 1,5 E2/35	56.702.7653.0	50			
Multi-tier block, vertically connected	black				WKF 1,5 E2/VB/35	56.702.6953.1	50
Multi-tier block, combined	gray						
Multi-tier ground block	green/yellow						
Accessories							
1. Mounting rail 35, 7.5 mm high	L = 2 m	35x27x7,5 EN 60715	98.300.0000.0	1	35x27x7,5 EN 60715	98.300.0000.0	1
Mounting rail 35, 15 mm high	L = 2 m	35x24x15 EN 60715	98.360.0000.0	1	35x24x15 EN 60715	98.360.0000.0	1
2. End clamp TS 35, with screw[2]	8 mm wide	9708/2 S35	Z5.522.8553.0	100	9708/2 S35	Z5.522.8553.0	100
End clamp TS 35, without screw	8 mm wide	WEF 1/35	Z5.523.9353.0	100	WEF 1/35	Z5.523.9353.0	100
3. End plate	gray	APF 1,5 E2	07.312.8753.0	10	APF 1,5 E2	07.312.8753.0	10
	blue						
Segment end plate	gray						
4. Partition plate	gray	TWF 1,5 E2	07.312.8853.0	10	TWF 1,5 E2	07.312.8853.0	10
	blue						
5. Cross connector	2 pole	IVB WKF 1,5–2	Z7.268.0227.0	10	IVB WKF 1,5–2	Z7.268.0227.0	10
insulated	3 pole	IVB WKF 1,5–3	Z7.268.0327.0	10	IVB WKF 1,5–3	Z7.268.0327.0	10
	4 pole	IVB WKF 1,5–4	Z7.268.0427.0	10	IVB WKF 1,5–4	Z7.268.0427.0	10
	5 pole	IVB WKF 1,5–5	Z7.268.0527.0	10	IVB WKF 1,5–5	Z7.268.0527.0	10
	10 pole	IVB WKF 1,5–10	Z7.268.1027.0	10	IVB WKF 1,5–10	Z7.268.1027.0	10
	20 pole	IVB WKF 1,5–20	Z7.268.2027.0	10	IVB WKF 1,5–20	Z7.268.2027.0	10
6. Wire entry guide	0.13–0.2 mm²	LEL 1,5/1 WEISS	05.564.4253.0	10	LEL 1,5/1 WEISS	05.564.4253.0	10
	0.25–0.5 mm²	LEL 1,5/2 GRAU	05.564.4353.0	10	LEL 1,5/2 GRAU	05.564.4353.0	10
	0.75–1.0 mm²						
7. Cover with warning symbol over 5 blocks		ADF 1,5/5 GELB	04.343.6953.8	10	ADF 1,5/5 GELB	04.343.6953.8	10
8. Marking tag carrier, 2-fold		BT 4/2	04.243.0953.0	100	BT 4/2	04.243.0953.0	100
9. Test adapter, modular							
10. Test plug							
11. Screwdriver, uninsulated		DIN 5264 B 0,4x2,5	06.502.4300.0	5	DIN 5264 B 0,4x2,5	06.502.4300.0	5
Marking accessories see page 77–81							

*) For maintaining the proper isolation distances, the open side of a feed-through terminal block as well as both sides of a jumper are to be covered by partitions.
[1] Follow the Ex installation instructions
[2] Do not use in Ex environments.
[3] Rated current when using cross connectors

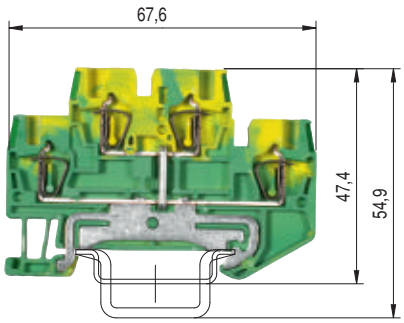

WKF 1,5 E2/SL/35

fine-stranded	solid	V	A
0.08–1.5 mm²	0.08–1.5 mm²	500 V/6 kV/3	
No. 26-14 AWG		300 V	
No. 26-14 AWG		300 V	
0.14–1.5 mm²	0.14–1.5 mm²	*)	
4 mm			10 mm

ATEX

Type	Part No.	Std. Pack
WKF 1,5 E2/SL/35	56.702.9253.0	50
35x27x7,5 EN 60715	98.300.0000.0	1
35x24x15 EN 60715	98.360.0000.0	1
9708/2 S35	Z5.522.8553.0	100
WEF 1/35	Z5.523.9353.0	100
APF 1,5 E2	07.312.8753.0	10
TWF 1,5 E2	07.312.8853.0	10
IVB WKF 1,5–2	Z7.268.0227.0	10
IVB WKF 1,5–3	Z7.268.0327.0	10
IVB WKF 1,5–4	Z7.268.0427.0	10
IVB WKF 1,5–5	Z7.268.0527.0	10
IVB WKF 1,5–10	Z7.268.1027.0	10
IVB WKF 1,5–20	Z7.268.2027.0	10
LEL 1,5/1 WEISS	05.564.4253.0	10
LEL 1,5/2 GRAU	05.564.4353.0	10
ADF 1,5/5 GELB	04.343.6953.8	10
BT 4/2	04.243.0953.0	100
DIN 5264 B 0,4x2,5	06.502.4300.0	5

Multi-tier terminal blocks with tension spring connection

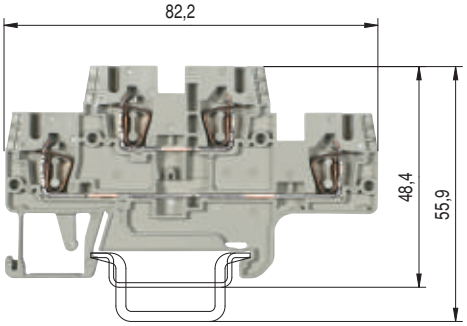

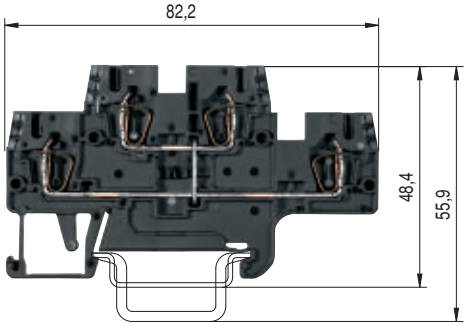

	WKFN 2,5 E/35 WKFN 2,5 E/N/D/35			WKFN 2,5 E/VB/35		
0344 Ex II 2GD IM2	fine-stranded	solid	V	fine-stranded	solid	V
Ex e I/II	0.13–2.5 mm²	0.13–4 mm²	500 V/6 kV/3	0.13–2.5 mm²	0.13–4 mm²	500 V/6 kV/3
EN 60 947-7-1:2002	No. 22-12 AWG		300 V	No. 22-12 AWG		600 V
UL ratings field/factory wiring	No. 24-12 AWG		300 V	No. 24-12 AWG		600 V
CSA ratings	0.2–2.5 mm²	0.13–4 mm²	440/275*	0.2–2.5 mm²	0.13–4 mm²	440
PTB 04 ATEX 1051 U[1] EN 60 079-0/EN 60 079-7	5 mm		11 mm	5 mm		11 mm
Width Wire strip length						
Approvals						

		Type	Part No.	Std. Pack	Type	Part No.	Std. Pack
Multi-tier block	gray	WKFN 2,5 E/35	56.703.7055.0	100			
Multi-tier block, vertically connected	black				WKFN 2,5 E/VB/35	56.703.6955.1	100
Multi-tier block, combined	gray	WKFN 2,5 E/N/D/35	56.703.7655.0	100			
Multi-tier block, combined	gray						
Multi-tier ground block	green/yellow						
Accessories							
1. Mounting rail 35, 7.5 mm high	L = 2 m	35x27x7,5 EN 60715	98.300.0000.0	1	35x27x7,5 EN 60715	98.300.0000.0	1
Mounting rail 35, 15 mm high	L = 2 m	35x24x15 EN 60715	98.360.0000.0	1	35x24x15 EN 60715	98.360.0000.0	1
2. End clamp TS 35, with screw	8 mm wide	9708/2 S35	Z5.522.8553.0	100	9708/2 S35	Z5.522.8553.0	100
End clamp TS 35, without screw	8 mm wide	WEF 1/35	Z5.523.9353.0	100	WEF 1/35	Z5.523.9353.0	100
3. End plate	gray	APFN 2,5 E	07.312.7355.0	10	APFN 2,5 E	07.312.7355.0	10
	blue						
	green						
4. Partition plate	gray	TWFN 2,5 E	07.312.7455.0	10	TWFN 2,5 E	07.312.7455.0	10
	blue						
5. Cross connector	2 pole	IVB WKF 2,5–2	Z7.280.6227.0	10	IVB WKF 2,5–2	Z7.280.6227.0	10
insulated	3 pole	IVB WKF 2,5–3	Z7.280.6327.0	10	IVB WKF 2,5–3	Z7.280.6327.0	10
	4 pole	IVB WKF 2,5–4	Z7.280.6427.0	10	IVB WKF 2,5–4	Z7.280.6427.0	10
	5 pole	IVB WKF 2,5–5	Z7.280.6527.0	10	IVB WKF 2,5–5	Z7.280.6527.0	10
	until 10 pole	IVB WKF 2,5–10	Z7.280.7027.0	20	IVB WKF 2,5–10	Z7.280.7027.0	20
Vertical cross connector	1 pole	IVB WKF–V	Z7.261.1127.0	10	IVB WKF–V	Z7.261.1127.0	10
6. Wire entry guide	0.13–0.2 mm²	LELN 2,5/1 WEISS	05.564.3755.0	100	LELN 2,5/1 WEISS	05.564.3755.0	100
	0.25–0.5 mm²	LELN 2,5/2 GRAU	05.564.3855.0	100	LELN 2,5/2 GRAU	05.564.3855.0	100
	0.75–1.0 mm²	LELN 2,5/3 SCHWARZ	05.564.3955.0	100	LELN 2,5/3 SCHWARZ	05.564.3955.0	100
7. Cover with warning symbol over 4 blocks		ADFN 2,5/4 GELB	04.343.8353.8	10	ADFN 2,5/4 GELB	04.343.8353.8	10
8. Marking tag carrier, 2-fold		BT 5/2	04.243.0855.0	100	BT 5/2	04.243.0855.0	100
9. Test adapter, modular		PS WKC/F	Z1.299.9753.0	10	PS WKC/F	Z1.299.9753.0	10
10. Test plug		ST 2/2,3	Z5.553.2921.0	10	ST 2/2,3	Z5.553.2921.0	10
11. Screwdriver, uninsulated		DIN 5264 B 0,6x3,5	06.502.4000.0	5	DIN 5264 B 0,6x3,5	06.502.4000.0	5
Screwdriver, uninsulated, MINI		DIN 5264 B 0,6x3,5 M	06.502.5000.0	10	DIN 5264 B 0,6x3,5 M	06.502.5000.0	10
Marking accessories see page 77–81							

[1] Follow the Ex installation instructions
[2] 1. value at 40 K/2. value at 45 K
* When using cross connectors on the upper tier

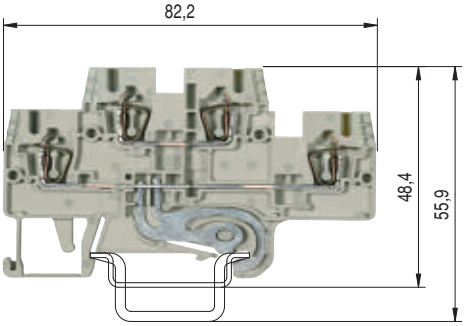

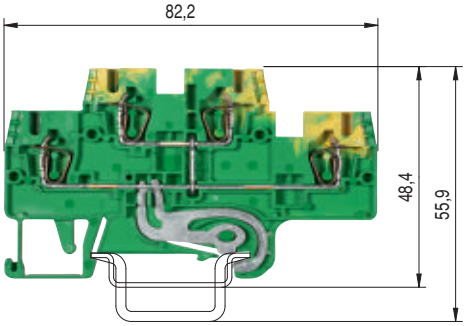

WKFN 2,5 E/D/SL/35
WKFN 2,5 E/N/SL/35

fine-stranded	solid	V	A
0.13–2.5 mm²	0.13–4 mm²	500 V/6 kV/3	24
No. 22-12 AWG		300 V	20
No. 24-12 AWG		300 V	24

5 mm 11 mm

WKFN 2,5 E/SL/35

fine-stranded	solid	V	A
0.13–2.5 mm²	0.13–4 mm²	500 V/6 kV/3	
No. 22-12 AWG		600 V	
No. 24-12 AWG		600 V	
0.2–2.5 mm²	0.13–4 mm²		

5 mm 11 mm

Type	Part No.	Std. Pack	Type	Part No.	Std. Pack
WKFN 2,5 E/D/SL/35	56.703.7855.0	100			
WKFN 2,5 E/N/SL/35	56.703.7755.0	100			
			WKFN 2,5 E/SL/35	56.703.8955.0	100
35x27x7,5 EN 60715	98.300.0000.0	1	35x27x7,5 EN 60715	98.300.0000.0	1
35x24x15 EN 60715	98.360.0000.0	1	35x24x15 EN 60715	98.360.0000.0	1
9708/2 S35	Z5.522.8553.0	100	9708/2 S35	Z5.522.8553.0	100
WEF 1/35	Z5.523.9353.0	100	WEF 1/35	Z5.523.9353.0	100
APFN 2,5 E	07.312.7355.0	10			
			APFN 2,5 E GRÜN	07.312.7355.7	10
TWFN 2,5 E	07.312.7455.0	10			
IVB WKF 2,5–2	Z7.280.6227.0	10			
IVB WKF 2,5–3	Z7.280.6327.0	10			
IVB WKF 2,5–4	Z7.280.6427.0	10			
IVB WKF 2,5–5	Z7.280.6527.0	10			
IVB WKF 2,5–10	Z7.280.7027.0	20			
IVB WKF–V	Z7.261.1127.0	10			
LELN 2,5/1 WEISS	05.564.3755.0	100	LELN 2,5/1 WEISS	05.564.3755.0	100
LELN 2,5/2 GRAU	05.564.3855.0	100	LELN 2,5/2 GRAU	05.564.3855.0	100
LELN 2,5/3 SCHWARZ	05.564.3955.0	100	LELN 2,5/3 SCHWARZ	05.564.3955.0	100
ADFN 2,5/4 GELB	04.343.8353.8	10	ADFN 2,5/4 GELB	04.343.8353.8	10
BT 5/2	04.243.0855.0	100	BT 5/2	04.243.0855.0	100
PS WKC/F	Z1.299.9753.0	10	PS WKC/F	Z1.299.9753.0	10
ST 2/2,3	Z5.553.2921.0	10	ST 2/2,3	Z5.553.2921.0	10
DIN 5264 B 0,6x3,5	06.502.4000.0	5	DIN 5264 B 0,6x3,5	06.502.4000.0	5
DIN 5264 B 0,6x3,5 M	06.502.5000.0	10	DIN 5264 B 0,6x3,5 M	06.502.5000.0	10

WKFN 2,5 E/35 Block color: gray

	Function	Color ID
Upper tier	Feed-through	gray
Lower tier	Feed-through	gray

WKFN 2,5 E/N/D/35 Block color: gray

	Function	Color ID
Upper tier	Feed-through	blue
Lower tier	Feed-through	gray

WKFN 2,5 E/VB/35 Block color: gray

	Function	Color ID
Upper tier	Feed-through	black
Lower tier	vertically jumpered	black

WKFN 2,5 E/D/SL/35 Block color: gray

	Function	Color ID
Upper tier	Feed-through	gray
Lower tier	Ground conductor	green/yellow

WKFN 2,5 E/N/SL/35 Block color: gray

	Function	Color ID
Upper tier	Feed-through	blue
Lower tier	Ground conductor	green/yellow

WKFN 2,5 E/SL/35 Block color: green/yellow

	Function	Color ID
Upper tier	Ground conductor	green/yellow
Lower tier	vertically jumpered	green/yellow

Duo multi-tier terminal blocks with tension spring connection

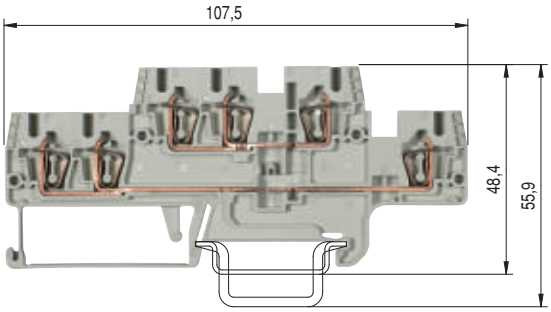

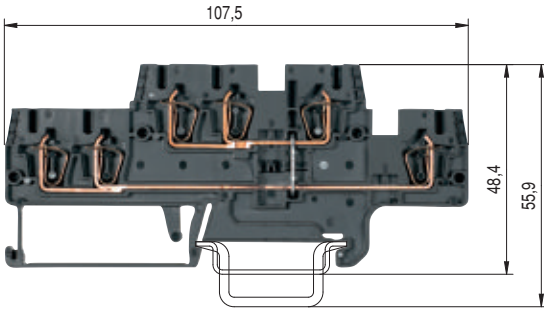

		WKFN 2,5 E1/2/35 WKFN 2,5 E1/2/N/D/35			WKFN 2,5 E1/2/VB/35		
0344 Ⓔx II 2GD IM2		fine-stranded	solid	V	A	fine-stranded	solid	V	A
Ex e I/II		0.13–2.5 mm²	0.13–4 mm²	500 V/6 kV/3	22	0.13–2.5 mm²	0.13–4 mm²	500 V/6 kV/3	22
EN 60 947-7-1:2002		No. 22-12 AWG		300 V	20	No. 22-12 AWG		600 V	20
UL ratings	field/factory wiring	No. 24-12 AWG		300 V	24	No. 24-12 AWG		600 V	24
CSA ratings		0.2–2.5 mm²	0.13–4 mm²	440/275*	20/21[2]	0.2–2.5 mm²	0.13–4 mm²	440	20/21[2]
PTB 04 ATEX 1051 U[1]	EN 60 079-0/EN 60 079-7								
Width	Wire strip length	5 mm			11 mm	5 mm			11 mm
Approvals		PTB VDE UL CSA Ex				PTB VDE UL CSA Ex			

		Type	Part No.	Std. Pack	Type	Part No.	Std. Pack
Multi-tier block	gray	WKFN 2,5 E1/2/35	56.703.6055.0	50			
Multi-tier block, vertically connected	black				WKFN 2,5 E1/2/VB/35	56.703.5955.1	50
Multi-tier block, combined	gray	WKFN 2,5 E1/2/N/D/35	56.703.6355.0	50			
Multi-tier block, combined	gray						
Multi-tier ground block	green/yellow						
Accessories							
1. Mounting rail 35, 7.5 mm high	L = 2 m	35x27x7,5 EN 60715	98.300.0000.0	1	35x27x7,5 EN 60715	98.300.0000.0	1
Mounting rail 35, 15 mm high	L = 2 m	35x24x15 EN 60715	98.360.0000.0	1	35x24x15 EN 60715	98.360.0000.0	1
2. End clamp TS 35, with screw	8 mm wide	9708/2 S35	Z5.522.8553.0	100	9708/2 S35	Z5.522.8553.0	100
End clamp TS 35, without screw	8 mm wide	WEF 1/35	Z5.523.9353.0	100	WEF 1/35	Z5.523.9353.0	100
3. End plate	gray	APFN 2,5 E1/2	07.312.7755.0	10	APFN 2,5 E1/2	07.312.7755.0	10
	blue						
	green						
4. Partition plate	gray	TWFN 2,5 E1/2	07.312.7855.0	10	TWFN 2,5 E1/2	07.312.7855.0	10
	blue						
5. Cross connector	2 pole	IVB WKF 2,5–2	Z7.280.6227.0	10	IVB WKF 2,5–2	Z7.280.6227.0	10
insulated	3 pole	IVB WKF 2,5–3	Z7.280.6327.0	10	IVB WKF 2,5–3	Z7.280.6327.0	10
	4 pole	IVB WKF 2,5–4	Z7.280.6427.0	10	IVB WKF 2,5–4	Z7.280.6427.0	10
	5 pole	IVB WKF 2,5–5	Z7.280.6527.0	10	IVB WKF 2,5–5	Z7.280.6527.0	10
	until 10 pole	IVB WKF 2,5–10	Z7.280.7027.0	20	IVB WKF 2,5–10	Z7.280.7027.0	20
Vertical cross connector	1 pole	IVB WKF–V	Z7.261.1127.0	10	IVB WKF–V	Z7.261.1127.0	10
6. Wire entry guide	0.13–0.2 mm²	LELN 2,5/1 WEISS	05.564.3755.0	100	LELN 2,5/1 WEISS	05.564.3755.0	100
	0.25–0.5 mm²	LELN 2,5/2 GRAU	05.564.3855.0	100	LELN 2,5/2 GRAU	05.564.3855.0	100
	0.75–1.0 mm²	LELN 2,5/3 SCHWARZ	05.564.3955.0	100	LELN 2,5/3 SCHWARZ	05.564.3955.0	100
7. Cover with warning symbol over 4 blocks		ADFN 2,5/4 GELB	04.343.8353.8	10	ADFN 2,5/4 GELB	04.343.8353.8	10
8. Marking tag carrier, 2-fold		BT 5/2	04.243.0855.0	100	BT 5/2	04.243.0855.0	100
9. Test adapter, modular		PS WKC/F	Z1.299.9753.0	10	PS WKC/F	Z1.299.9753.0	10
10. Test plug		ST 2/2,3	Z5.553.2921.0	10	ST 2/2,3	Z5.553.2921.0	10
11. Screwdriver, uninsulated		DIN 5264 B 0,6x3,5	06.502.4000.0	5	DIN 5264 B 0,6x3,5	06.502.4000.0	5
Screwdriver, uninsulated, MINI		DIN 5264 B 0,6x3,5 M	06.502.5000.0	10	DIN 5264 B 0,6x3,5 M	06.502.5000.0	10
Marking accessories see page 77–81							

[1] Follow the Ex installation instructions
[2] 1. value at 40 K/2. value at 45 K
* When using cross connectors on the upper tier

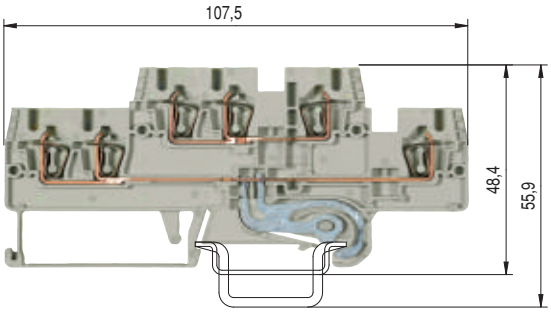

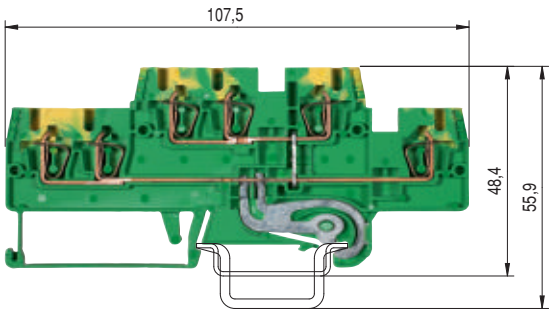

WKFN 2,5 E1/2/D/SL/35
WKFN 2,5 E1/2/N/SL/35

fine-stranded	solid	V	A
0.13–2.5 mm²	0.13–4 mm²	500 V/6 kV/3	22
No. 22-12 AWG		300 V	20
No. 24-12 AWG		300 V	24

5 mm 11 mm

WKFN 2,5 E1/2/SL/35

fine-stranded	solid	V	A
0.13–2.5 mm²	0.13–4 mm²	500 V/6 kV/3	
No. 22-12 AWG		600 V	
No. 24-12 AWG		600 V	
0.2–2.5 mm²	0.13–4 mm²		

5 mm 11 mm

Type	Part No.	Std. Pack	Type	Part No.	Std. Pack
WKFN 2,5 E1/2/D/SL/35	56.703.6155.0	50			
WKFN 2,5 E1/2/N/SL/35	56.703.6455.0	50			
			WKFN 2,5 E/SL/35	56.703.6255.0	50
35x27x7,5 EN 60715	98.300.0000.0	1	35x27x7,5 EN 60715	98.300.0000.0	1
35x24x15 EN 60715	98.360.0000.0	1	35x24x15 EN 60715	98.360.0000.0	1
9708/2 S35	Z5.522.8553.0	100	9708/2 S35	Z5.522.8553.0	100
WEF 1/35	Z5.523.9353.0	100	WEF 1/35	Z5.523.9353.0	100
APFN 2,5 E1/2	07.312.7755.0	10			
			APFN 2,5 E1/2 GRÜN	07.312.7755.7	10
TWFN 2,5 E1/2	07.312.7855.0	10			
IVB WKF 2,5–2	Z7.280.6227.0	10			
IVB WKF 2,5–3	Z7.280.6327.0	10			
IVB WKF 2,5–4	Z7.280.6427.0	10			
IVB WKF 2,5–5	Z7.280.6527.0	10			
IVB WKF 2,5–10	Z7.280.7027.0	20			
IVB WKF–V	Z7.261.1127.0	10			
LELN 2,5/1 WEISS	05.564.3755.0	100	LELN 2,5/1 WEISS	05.564.3755.0	100
LELN 2,5/2 GRAU	05.564.3855.0	100	LELN 2,5/2 GRAU	05.564.3855.0	100
LELN 2,5/3 SCHWARZ	05.564.3955.0	100	LELN 2,5/3 SCHWARZ	05.564.3955.0	100
ADFN 2,5/4 GELB	04.343.8353.8	10	ADFN 2,5/4 GELB	04.343.8353.8	10
BT 5/2	04.243.0855.0	100	BT 5/2	04.243.0855.0	100
PS WKC/F	Z1.299.9753.0	10	PS WKC/F	Z1.299.9753.0	10
ST 2/2,3	Z5.553.2921.0	10	ST 2/2,3	Z5.553.2921.0	10
DIN 5264 B 0,6x3,5	06.502.4000.0	5	DIN 5264 B 0,6x3,5	06.502.4000.0	5
DIN 5264 B 0,6x3,5 M	06.502.5000.0	10	DIN 5264 B 0,6x3,5 M	06.502.5000.0	10

WKFN 2,5 E1/2/35 Block color: gray

	Function	Color ID
Upper tier	Feed-through	gray
Lower tier	Feed-through	gray

WKFN 2,5 E1/2/N/D/35 Block color: gray

	Function	Color ID
Upper tier	Feed-through	blue
Lower tier	Feed-through	gray

WKFN 2,5 E1/2/VB/35 Block color: black

	Function	Color ID
Upper tier	Feed-through	black
Lower tier	vertically jumpered	black

WKFN 2,5 E1/2/D/SL/35 Block color: gray

	Function	Color ID
Upper tier	Feed-through	gray
Lower tier	Ground conductor	green/yellow

WKFN 2,5 E1/2/N/SL/35 Block color: gray

	Function	Color ID
Upper tier	Feed-through	blue
Lower tier	Ground conductor	green/yellow

WKFN 2,5 E1/2/SL/35 Block color: green/yellow

	Function	Color ID
Upper tier	Ground conductor	green/yellow
Lower tier	vertically jumpered	green/yellow

Multi-tier terminal blocks with tension spring connection

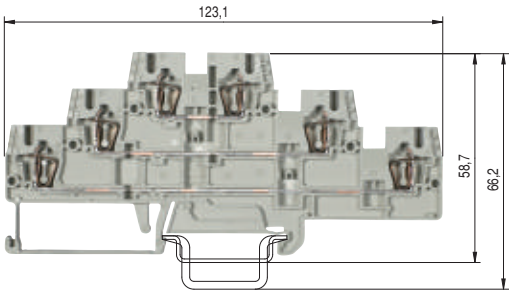

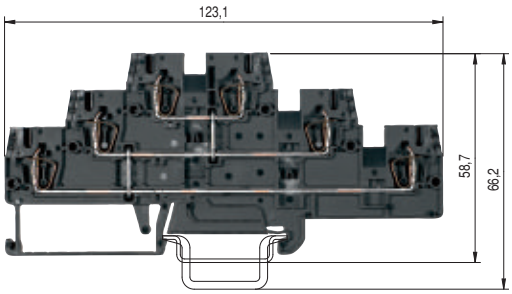

0344 Ⓔx II 2GD IM2
Ex e I/II
EN 60 947-7-1:2002
UL ratings field/factory wiring
CSA ratings
PTB 04 ATEX 1051 U1) EN 60 079-0/EN 60 079-7
Width Wire strip length
Approvals

WKFN 2,5 E3/35

fine-stranded	solid	V	A
0.13–2.5 mm²	0.13–4 mm²	500 V/6 kV/3	20
No. 22-12 AWG		300 V	20
No. 24-12 AWG		300 V	24
0.2–2.5 mm²	0.13–4 mm²	440/275*	19/20[2]
5 mm			11 mm

PTB VDE UL UL AEx CSA CSA Ex

WKFN 2,5 E3/VB/35

fine-stranded	solid	V	A
0.13–2.5 mm²	0.13–4 mm²	500 V/6 kV/3	24
No. 22-12 AWG		600 V	20
No. 24-12 AWG		600 V	24
0.2–2.5 mm²	0.13–4 mm²	440	20/21.5[2]
5 mm			11 mm

PTB VDE UL CSA CSA Ex

		Type	Part No.	Std. Pack	Type	Part No.	Std. Pack
Multi-tier block	gray	WKFN 2,5 E3/35	56.703.3055.0	50			
Multi-tier block, vertically connected	black				WKFN 2,5 E3/VB/35	56.703.2955.1	50
Multi-tier block, combined	gray						
Multi-tier block, combined	gray						
Multi-tier ground block	green/yellow						
Accessories							
1. Mounting rail 35, 7.5 mm high	L = 2 m	35x27x7,5 EN 60715	98.300.0000.0	1	35x27x7,5 EN 60715	98.300.0000.0	1
Mounting rail 35, 15 mm high	L = 2 m	35x24x15 EN 60715	98.360.0000.0	1	35x24x15 EN 60715	98.360.0000.0	1
2. End clamp TS 35, with screw	8 mm wide	9708/2 S35	Z5.522.8553.0	100	9708/2 S35	Z5.522.8553.0	100
End clamp TS 35, without screw	8 mm wide	WEF 1/35	Z5.523.9353.0	100	WEF 1/35	Z5.523.9353.0	100
3. End plate	gray	APFN 2,5 E3	07.312.7555.0	10	APFN 2,5 E3	07.312.7555.0	10
	blue						
	green						
4. Partition plate	gray	TWFN 2,5 E3	07.312.7655.0	10	TWFN 2,5 E3	07.312.7655.0	10
	blue						
5. Cross connector	2 pole	IVB WKF 2,5–2	Z7.280.6227.0	10	IVB WKF 2,5–2	Z7.280.6227.0	10
insulated	3 pole	IVB WKF 2,5–3	Z7.280.6327.0	10	IVB WKF 2,5–3	Z7.280.6327.0	10
	4 pole	IVB WKF 2,5–4	Z7.280.6427.0	10	IVB WKF 2,5–4	Z7.280.6427.0	10
	5 pole	IVB WKF 2,5–5	Z7.280.6527.0	10	IVB WKF 2,5–5	Z7.280.6527.0	10
	until 10 pole	IVB WKF 2,5–10	Z7.280.7027.0	20	IVB WKF 2,5–10	Z7.280.7027.0	20
Vertical cross connector	1 pole	IVB WKF–V	Z7.261.1127.0	10	IVB WKF–V	Z7.261.1127.0	10
6. Wire entry guide	0.13–0.2 mm²	LELN 2,5/1 WEISS	05.564.3755.0	100	LELN 2,5/1 WEISS	05.564.3755.0	100
	0.25–0.5 mm²	LELN 2,5/2 GRAU	05.564.3855.0	100	LELN 2,5/2 GRAU	05.564.3855.0	100
	0.75–1.0 mm²	LELN 2,5/3 SCHWARZ	05.564.3955.0	100	LELN 2,5/3 SCHWARZ	05.564.3955.0	100
7. Cover with warning symbol over 4 blocks		ADFN 2,5/4 GELB	04.343.8353.8	10	ADFN 2,5/4 GELB	04.343.8353.8	10
8. Marking tag carrier, 2-fold		BT 5/3	04.243.0755.0	100	BT 5/3	04.243.0755.0	100
9. Test adapter, modular		PS WKC/F	Z1.299.9753.0	10	PS WKC/F	Z1.299.9753.0	10
10. Test plug		ST 2/2,3	Z5.553.2921.0	10	ST 2/2,3	Z5.553.2921.0	10
11. Screwdriver, uninsulated		DIN 5264 B 0,6x3,5	06.502.4000.0	5	DIN 5264 B 0,6x3,5	06.502.4000.0	5
Screwdriver, uninsulated, MINI		DIN 5264 B 0,6x3,5 M	06.502.5000.0	10	DIN 5264 B 0,6x3,5 M	06.502.5000.0	10
Marking accessories see page 77–81							

[1] Follow the Ex installation instructions
[2] 1. value at 40 K/2. value at 45 K
* When using cross connectors on the upper tier

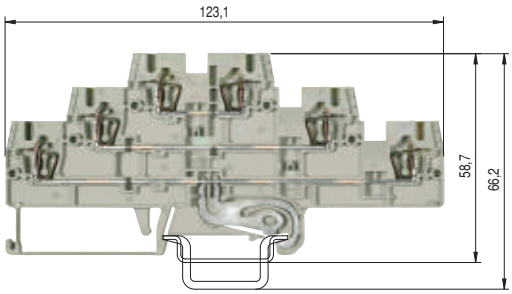

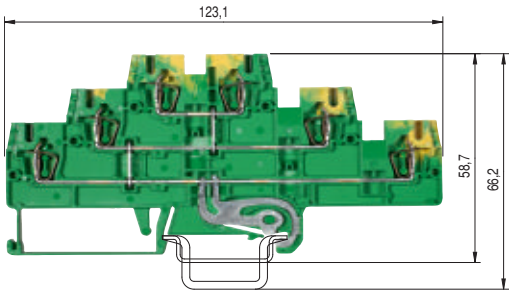

WKFN 2,5 E3/D/D/SL/35
WKFN 2,5 E3/N/D/SL/35

fine-stranded	solid	V	A
0.13–2.5 mm²	0.13–4 mm²	500 V/6 kV/3	24
No. 22-12 AWG		300 V	20
No. 24-12 AWG		300 V	24

5 mm 11 mm

WKFN 2,5 E3/SL/35

fine-stranded	solid	V	A
0.13–2.5 mm²	0.13–4 mm²	500 V/6 kV/3	
No. 22-12 AWG		600 V	
No. 24-12 AWG		600 V	
0.2–2.5 mm²	0.13–4 mm²		

5 mm 11 mm

Type	Part No.	Std. Pack	Type	Part No.	Std. Pack
WKFN 2,5 E3/D/D/SL/35	56.703.3355.0	50			
WKFN 2,5 E3/N/D/SL/35	56.703.3255.0	50			
			WKFN 2,5 E/SL/35	56.703.8855.0	50
35x27x7,5 EN 60715	98.300.0000.0	1	35x27x7,5 EN 60715	98.300.0000.0	1
35x24x15 EN 60715	98.360.0000.0	1	35x24x15 EN 60715	98.360.0000.0	1
9708/2 S35	Z5.522.8553.0	100	9708/2 S35	Z5.522.8553.0	100
WEF 1/35	Z5.523.9353.0	100	WEF 1/35	Z5.523.9353.0	100
APFN 2,5 E3	07.312.7555.0	10			
			APFN 2,5 E3 GRÜN	07.312.7555.7	10
TWFN 2,5 E3	07.312.7655.0	10			
IVB WKF 2,5–2	Z7.280.6227.0	10			
IVB WKF 2,5–3	Z7.280.6327.0	10			
IVB WKF 2,5–4	Z7.280.6427.0	10			
IVB WKF 2,5–5	Z7.280.6527.0	10			
IVB WKF 2,5–10	Z7.280.7027.0	20			
IVB WKF–V	Z7.261.1127.0	10			
LELN 2,5/1 WEISS	05.564.3755.0	100	LELN 2,5/1 WEISS	05.564.3755.0	100
LELN 2,5/2 GRAU	05.564.3855.0	100	LELN 2,5/2 GRAU	05.564.3855.0	100
LELN 2,5/3 SCHWARZ	05.564.3955.0	100	LELN 2,5/3 SCHWARZ	05.564.3955.0	100
ADFN 2,5/4 GELB	04.343.8353.8	10	ADFN 2,5/4 GELB	04.343.8353.8	10
BT 5/3	04.243.0755.0	100	BT 5/3	04.243.0755.0	100
PS WKC/F	Z1.299.9753.0	10	PS WKC/F	Z1.299.9753.0	10
ST 2/2,3	Z5.553.2921.0	10	ST 2/2,3	Z5.553.2921.0	10
DIN 5264 B 0,6x3,5	06.502.4000.0	5	DIN 5264 B 0,6x3,5	06.502.4000.0	5
DIN 5264 B 0,6x3,5 M	06.502.5000.0	10	DIN 5264 B 0,6x3,5 M	06.502.5000.0	10

WKFN 2,5 E3/35 Block color: gray

	Function	Color ID
Upper tier	Feed-through	gray
center tier	Feed-through	gray
Lower tier	Feed-through	gray

WKFN 2,5 E3/VB/35 Block color: black

	Function	Color ID
Upper tier	Feed-through	black
center tier	vertically jumpered	black
Lower tier		black

WKFN 2,5 E3/D/D/SL/35 Block color: gray

	Function	Color ID
Upper tier	Feed-through	gray
center tier	Feed-through	gray
Lower tier	Ground conductor	green/yellow

WKFN 2,5 E3/N/D/SL/35 Block color: gray

	Function	Color ID
Upper tier	Feed-through	blue
center tier	Feed-through	gray
Lower tier	Ground conductor	green/yellow

WKFN 2,5 E3/SL/35 Block color: green/yellow

	Function	Color ID
Upper tier	Ground conductor	green/yellow
center tier	vertically jumpered	green/yellow
Lower tier		green/yellow

Multi-tier terminal blocks with tension spring connection

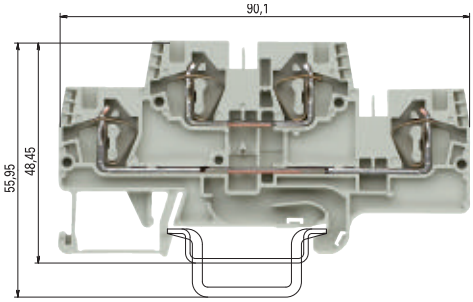

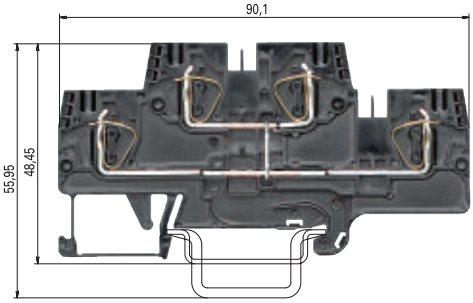

		WKFN 4 E/35 WKFN 4 E/N/D/35				WKFN 4 E/VB/35			
0344 Ⓔx II 2GD IM2		fine-stranded	solid	V	A	fine-stranded	solid	V	A
Ex e I/II		0.13–4 mm²	0.13–6 mm²	500 V/6 kV/3	32	0.13–4 mm²	0.13–6 mm²	500 V/6 kV/3	32
EN 60 947-7-1:2002		No. 24-10 AWG		300 V	30	No. 24-10 AWG		600 V	30
UL ratings	field/factory wiring	No. 24-10 AWG		300 V	32	No. 24-10 AWG		300 V	32
CSA ratings		0.13–4 mm²	0.2–6 mm²	440/352*	27/29[2)3)]	0.13–4 mm²	0.2–6 mm²	440	30/31[2)]
PTB 05 ATEX 1104 U1)	EN 60 079-0/EN 60 079-7								
Width	Wire strip length	6 mm			11 mm	6 mm			11 mm
Approvals		PTB VDE UL				PTB VDE UL			

			Type	Part No.	Std. Pack	Type	Part No.	Std. Pack
Multi-tier block		gray	WKFN 4 E/35	56.704.7055.0	100			
Multi-tier block, vertically connected		black				WKFN 4 E/VB/35	56.704.6955.1	100
Multi-tier block, combined		gray	WKFN 4 E/N/D/35	56.704.7655.0	100			
Multi-tier block, combined		gray						
Multi-tier ground block		green/yellow						
Accessories								
1. Mounting rail 35, 7.5 mm high		L = 2 m	35x27x7,5 EN 60715	98.300.0000.0	1	35x27x7,5 EN 60715	98.300.0000.0	1
Mounting rail 35, 15 mm high		L = 2 m	35x24x15 EN 60715	98.360.0000.0	1	35x24x15 EN 60715	98.360.0000.0	1
2. End clamp TS 35, with screw		8 mm wide	9708/2 S35	Z5.522.8553.0	100	9708/2 S35	Z5.522.8553.0	100
End clamp TS 35, without screw		8 mm wide	WEF 1/35	Z5.523.9353.0	100	WEF 1/35	Z5.523.9353.0	100
3. End plate	1,5 mm wide	gray	APFN 4 E...	07.312.9655.0	10	APFN 4 E...	07.312.9655.0	10
	1,5 mm wide	blue						
	1,5 mm wide	green						
4. Partition plate	1,5 mm wide	gray	TWFN 4 E...	07.312.9755.0	10	TWFN 4 E...	07.312.9755.0	10
	1,5 mm wide	blue						
5. Cross connector		2 pole	IVB WKF 4–2	Z7.261.1227.0	10	IVB WKF 4–2	Z7.261.1227.0	10
insulated		3 pole	IVB WKF 4–3	Z7.261.1327.0	10	IVB WKF 4–3	Z7.261.1327.0	10
		4 pole	IVB WKF 4–4	Z7.261.1427.0	10	IVB WKF 4–4	Z7.261.1427.0	10
		5 pole	IVB WKF 4–5	Z7.261.1527.0	10	IVB WKF 4–5	Z7.261.1527.0	10
		6 pole	IVB WKF 4–6	Z7.261.1627.0	10	IVB WKF 4–6	Z7.261.1627.0	10
		7 pole	IVB WKF 4–7	Z7.261.1727.0	20	IVB WKF 4–7	Z7.261.1727.0	20
		8 pole	IVB WKF 4–8	Z7.261.1827.0	20	IVB WKF 4–8	Z7.261.1827.0	20
		9 pole	IVB WKF 4–9	Z7.261.1927.0	20	IVB WKF 4–9	Z7.261.1927.0	20
		10 pole	IVB WKF 4–10	Z7.261.2027.0	20	IVB WKF 4–10	Z7.261.2027.0	20
6. Vertical cross connector		1 pole	IVB WKF-V*[)]	Z7.261.1127.0	10			
7. Wire entry guide		0.13–0.2 mm²	LEL 4/1 WEISS	05.561.8553.0	100	LEL 4/1 WEISS	05.561.8553.0	100
		0.25–0.5 mm²	LEL 4/2 GRAU	05.561.8653.0	100	LEL 4/2 GRAU	05.561.8653.0	100
		0.75–1.0 mm²	LEL 4/3 SCHWARZ	05.561.8753.0	100	LEL 4/3 SCHWARZ	05.561.8753.0	100
8. Cover with warning symbol over 4 blocks			ADF 4/4 GELB	04.343.6153.8	10	ADF 4/4 GELB	04.343.6153.8	10
9. Screwdriver, uninsulated			DIN 5264 B 0,6x3,5	06.502.4000.0	5	DIN 5264 B 0,6x3,5	06.502.4000.0	5
Screwdriver, uninsulated, MINI			DIN 5264 B 0,6x3,5 M	06.502.5000.0	10	DIN 5264 B 0,6x3,5 M	06.502.5000.0	10
Marking accessories see page 77–81								

[1)] Follow the Ex installation instructions
[2)] 1. value at 40 K/2. value at 45 K
* When using cross connectors on the upper tier

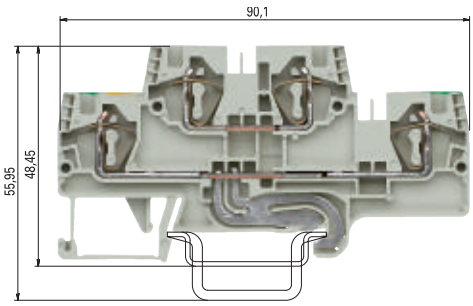

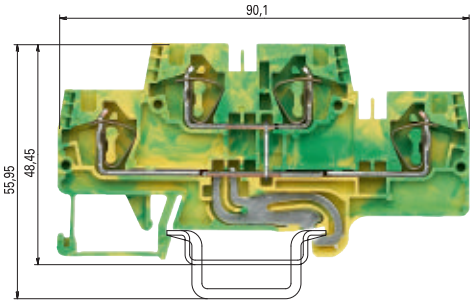

WKFN 4 E/D/SL/35
WKFN 4 E/N/SL/35

fine-stranded	solid	V	A
0.13–4 mm²	0.13–6 mm²	500 V/6 kV/3	32
No. 24-10 AWG		300 V	30
No. 24-10 AWG		300 V	32
6 mm			11 mm

PTB

WKFN 4 E/SL/35

fine-stranded	solid	V	A
0.13–4 mm²	0.13–6 mm²	500 V/6 kV/3	
No. 24-10 AWG		600 V	
No. 24-10 AWG		600 V	
0.13–4 mm²	0.2–6 mm²		
6 mm			11 mm

PTB

Type	Part No.	Std. Pack	Type	Part No.	Std. Pack
WKFN 4 E/D/SL/35	56.704.7855.0	100			
WKFN 4 E/N/SL/35	56.704.7755.0	100			
			WKFN 4 E SL/35	56.704.9255.0	100
35 x 27 x 7,5 EN 60715	98.300.0000.0	1	35 x 27 x 7,5 EN 60715	98.300.0000.0	1
35 x 24 x 15 EN 60715	98.360.0000.0	1	35 x 24 x 15 EN 60715	98.360.0000.0	1
9708/2 S35	Z5.522.8553.0	100	9708/2 S35	Z5.522.8553.0	100
WEF 1/35	Z5.523.9353.0	100	WEF 1/35	Z5.523.9353.0	100
APFN 4 E...	07.312.9655.0	10			
			APFN 4 E...	07.312.9655.7	10
TWFN 4 E...	07.312.9755.0	10			
IVB WKF 4–2	Z7.261.1227.0	10			
IVB WKF 4–3	Z7.261.1327.0	10			
IVB WKF 4–4	Z7.261.1427.0	10			
IVB WKF 4–5	Z7.261.1527.0	10			
IVB WKF 4–6	Z7.261.1627.0	10			
IVB WKF 4–7	Z7.261.1727.0	20			
IVB WKF 4–8	Z7.261.1827.0	20			
IVB WKF 4–9	Z7.261.1927.0	20			
IVB WKF 4–10	Z7.261.2027.0	20			
LEL 4/1 WEISS	05.561.8553.0	100	LEL 4/1 WEISS	05.561.8553.0	100
LEL 4/2 GRAU	05.561.8653.0	100	LEL 4/2 GRAU	05.561.8653.0	100
LEL 4/3 SCHWARZ	05.561.8753.0	100	LEL 4/3 SCHWARZ	05.561.8753.0	100
ADF 4/4 GELB	04.343.6153.8	10	ADF 4/4 GELB	04.343.6153.8	10
DIN 5264 B 0,6x3,5	06.502.4000.0	5	DIN 5264 B 0,6x3,5	06.502.4000.0	5
DIN 5264 B 0,6x3,5 M	06.502.5000.0	10	DIN 5264 B 0,6x3,5 M	06.502.5000.0	10

[3] When cross connectors are used acc. to EN 60079-0 and EN60079-7 the current must be reduced to 2 A at 45 K.

WKFN 4 E/35 — Block color: gray

	Function	Color ID
Upper tier	Feed-through	gray
Lower tier	Feed-through	gray

WKFN 4 E/N/D/35 — Block color: gray

	Function	Color ID
Upper tier	Feed-through	blue
Lower tier	Feed-through	gray

WKFN 4 E/VB/35 — Block color: black

	Function	Color ID
Upper tier	Feed-through	black
Lower tier	vertically jumpered	black

WKFN 4 E/D/SL/35 — Block color: gray

	Function	Color ID
Upper tier	Feed-through	gray
Lower tier	Ground conductor	green/yellow

WKFN 4 E/N/SL/35 — Block color: gray

	Function	Color ID
Upper tier	Feed-through	blue
Lower tier	Ground conductor	green/yellow

WKFN 4 E/SL/35 — Block color: green/yellow

	Function	Color ID
Upper tier	Ground conductor	green/yellow
Lower tier	vertically jumpered	green/yellow

Multi-tier function blocks with tension spring connection

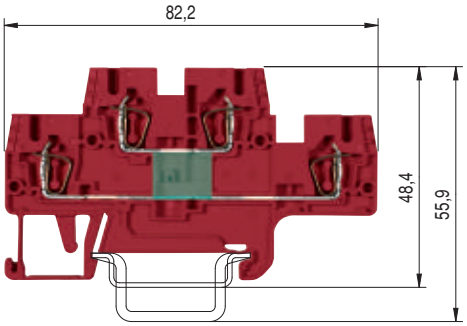

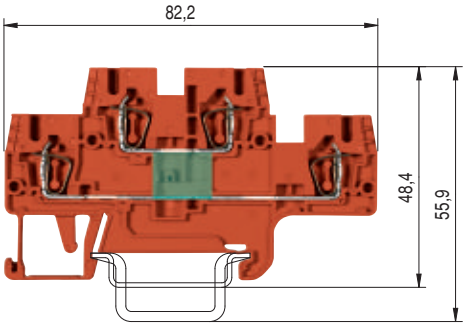

WKFN 2,5 E...G

		fine-stranded	solid	V	A
EN 60 947-7-1:2002		0.13–2.5 mm²	0.13–4 mm²		
UL ratings	field/factory wiring	No. 22-12 AWG			
CSA ratings		No. 24-12 AWG			
Width	Wire strip length	5 mm		11 mm	
Approvals					

The multi-tier block is available on request as a function block for most different switching tasks.

		Type	Part No.	Std. Pack
Function block	red	WKFN 2,5 E.../35	56.703.XX55.5	100
Function block	orange	WKFN 2,5 E.../35	56.703.XX55.9	100
Accessories				
1. Mounting rail 35, 7.5 mm high	L = 2 m	35x27x7,5 EN 60715	98.300.0000.0	1
Mounting rail 35, 15 mm hig	L = 2 m	35x24x15 EN 60715	98.360.0000.0	1
2. End clamp TS 35, with screw	8 mm wide	9708/2 S35	Z5.522.8553.0	100
End clamp TS 35, without screw	8 mm wide	WEF 1/35	Z5.523.9353.0	100
3. End plate	gray	APFN 2,5 E	07.312.7355.0	10
	blue			
	green			
4. Partition plate	gray	TWFN 2,5 E	07.312.7455.0	10
	blue			
5. Cross connector	2 pole	IVB WKF 2,5–2	Z7.280.6227.0	10
insulated	3 pole	IVB WKF 2,5–3	Z7.280.6327.0	10
	4 pole	IVB WKF 2,5–4	Z7.280.6427.0	10
	5 pole	IVB WKF 2,5–5	Z7.280.6527.0	10
	6 pole	IVB WKF 2,5–6	Z7.280.6627.0	10
	7 pole	IVB WKF 2,5–7	Z7.280.6727.0	20
	8 pole	IVB WKF 2,5–8	Z7.280.6827.0	20
	9 pole	IVB WKF 2,5–9	Z7.280.6927.0	20
	10 pole	IVB WKF 2,5–10	Z7.280.7027.0	20
Vertical cross connector	1 pole	IVB WKF–V	Z7.261.1127.0	10
6. Wire entry guide	0.13–0.2 mm²	LELN 2,5/1 WEISS	05.564.3755.0	100
	0.25–0.5 mm²	LELN 2,5/2 GRAU	05.564.3855.0	100
	0.75–1.0 mm²	LELN 2,5/3 SCHWARZ	05.564.3955.0	100
7. Cover with warning symbol over 4 blocks		ADFN 2,5/4 GELB	04.343.8353.8	10
8. Marking tag carrier, 2-fold		BT 4/2	04.243.0953.0	100
9. Test adapter, modular		PS WKC/F	Z1.299.9753.0	10
10. Test plug		ST 2/2,3	Z5.553.2921.0	10
11. Screwdriver, uninsulated		DIN 5264 B 0,6x3,5	06.502.4000.0	5
Screwdriver, uninsulated, MINI		DIN 5264 B 0,6x3,5 M	06.502.5000.0	10
Marking accessories see page 77–81				

Function diagram

56.703.7555.9
56.703.7555.5

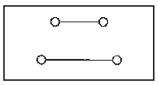

56.703.7155.5
56.703.7155.9

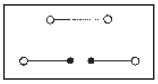

56.703.8055.9

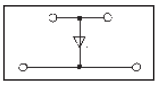

I = 1 A
U = 1000 V

56.703.8255.5

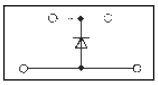

I = 1 A
U = 1000 V

56.703.7955.5

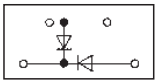

I = 1 A
U = 1000 V

56.703.8355.5

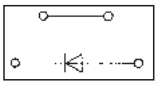

I = 1 A
U = 1000 V

56.703.7455.9
LED rot

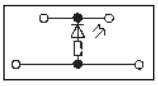

R = 4.7 kΩ
P = 0.5 W
U = 24 V DC

56.703.7255.5
LED rot

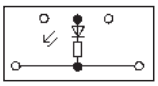

R = 4.7 kΩ
P = 0.5 W
U = 24 V DC

56.703.7355.5

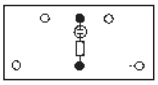

R = 680 kΩ
P = 0.25 W
U = 100-500 V

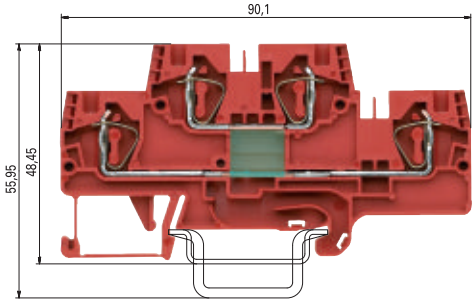

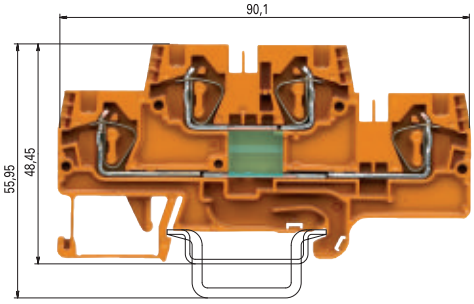

WKFN 4 E /35...

		fine-stranded	solid	V	A
EN 60 947-7-1:2002		0.13–4 mm²	0.13–6 mm²		
UL ratings	field/factory wiring	No. 24-10 AWG			
CSA ratings		No. 24-10 AWG			
Width	Wire strip length	6 mm		11 mm	
Approvals					

The multi-tier block is available on request as a function block for most different switching tasks.

		Type	Part No.	Std. Pack
Function block	red	WKFN 4 E /35...	56.704.XX55.5	100
Function block	orange	WKFN 4 E /35...	56.704.XX55.9	100
Accessories				
1. Mounting rail 35, 7.5 mm high	L = 2 m	35x27x7,5 EN 60715	98.300.0000.0	1
Mounting rail 35, 15 mm hig	L = 2 m	35x24x15 EN 60715	98.360.0000.0	1
2. End clamp TS 35, with screw	8 mm wide	9708/2 S35	Z5.522.8553.0	100
End clamp TS 35, without screw	8 mm wide	WEF 1/35	Z5.523.9353.0	100
3. End plate	gray	APFN 4 E...	07.312.9655.0	10
	blue			
	green			
4. Partition plate	gray	TWFN 4 E...	07.312.9755.0	10
	blue			
5. Cross connector	2 pole	IVB WKF 4–2	Z7.261.1227.0	10
insulated	3 pole	IVB WKF 4–3	Z7.261.1327.0	10
	4 pole	IVB WKF 4–4	Z7.261.1427.0	10
	5 pole	IVB WKF 4–5	Z7.261.1527.0	10
	6 pole	IVB WKF 4–6	Z7.261.1627.0	10
	7 pole	IVB WKF 4–7	Z7.261.1727.0	20
	8 pole	IVB WKF 4–8	Z7.261.1827.0	20
	9 pole	IVB WKF 4–9	Z7.261.1927.0	20
	10 pole	IVB WKF 4–10	Z7.261.2027.0	20
Vertical cross connector	1 pole			
6. Wire entry guide	0.13–0.2 mm²	LEL 4/1 WEISS	05.561.8553.0	100
	0.25–0.5 mm²	LEL 4/2 GRAU	05.561.8653.0	100
	0.75–1.0 mm²	LEL 4/3 SCHWARZ	05.561.8753.0	100
7. Cover with warning symbol over 4 blocks		ADF 4/4 GELB	04.343.6153.8	10
8. Marking tag carrier, 2-fold		BT 4/2	04.243.0953.0	100
9. Test adapter, modular		PS WKC/F	Z1.299.9753.0	10
10. Test plug		ST 2/2,3	Z5.553.2921.0	10
11. Screwdriver, uninsulated		DIN 5264 B 0,6x3,5	06.502.4000.0	5
Screwdriver, uninsulated, MINI		DIN 5264 B 0,6x3,5 M	06.502.5000.0	10

Function diagram

56.704.7555.9
56.704.7555.5

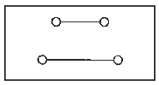

56.704.7155.5
56.704.7155.9

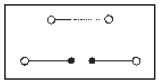

56.704.8055.9

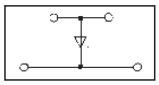

I = 1 A
U = 1000 V

56.704.8255.5

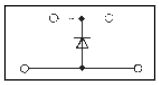

I = 1 A
U = 1000 V

56.704.7955.5

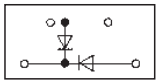

I = 1 A
U = 1000 V

56.704.8355.5

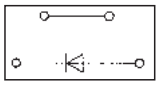

I = 1 A
U = 1000 V

56.704.7455.9
LED rot

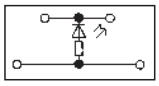

R = 4.7 kΩ
P = 0.5 W
U = 24 V DC

56.704.7255.5
LED rot

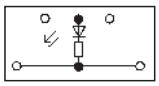

R = 4.7 kΩ
P = 0.5 W
U = 24 V DC

56.704.7355.5

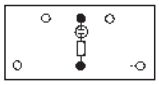

R = 680 kΩ
P = 0.25 W
U = 100-500 V

Disconnect terminal blocks with tension spring connection

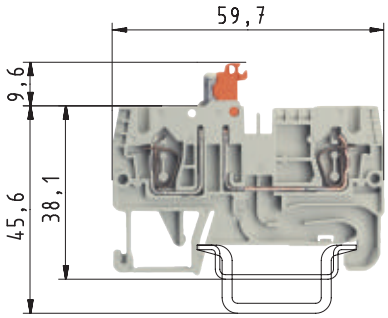

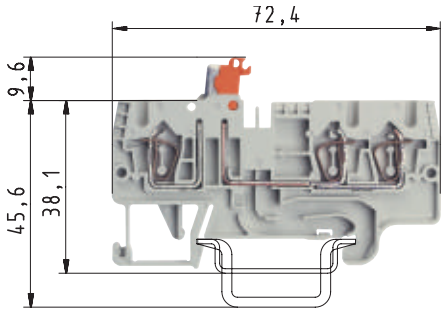

		WKFN 2,5 TKM/35		WKFN 2,5 TKM 1/2/35	
0344 Ⓔx II 2GD IM2		fine-stranded solid	V A	fine-stranded solid	V A
Ex e I/II		0.14–2,5 mm² 0.2–4 mm²	630 V/6 kV/3 20	0.14–2.5 mm² 0.2–4 mm²	630 V/6 kV/3 20
EN 60 947-7-1:2002		No. 24-12 AWG	300 V 19	No. 24-12 AWG	300 V 19
UL ratings	field/factory wiring	No. 24-12 AWG	300 V 20	No. 24-12 AWG	300 V 20
CSA ratings					
KEMA 01 ATEX 2087 U[1]	EN 60 079-0/EN 60 079-7				
Width	Wire strip length	5 mm	11 mm	5 mm	11 mm
Approvals					

		Type	Part No.	Std. Pack	Type	Part No.	Std. Pack
Disconnect terminal block	gray	WKFN 2,5 TKM/35	56.703.5355.0	100	WKFN 2,5 TKM 1/2/35	56.703.5455.0	100
Supply terminal	gray						
Accessories							
1. Mounting rail 35, Din rail 7.5 mm high	L = 2 m	35x27x7,5 EN 60715	98.300.0000.0	1	35x27x7,5 EN 60715	98.300.0000.0	1
Mounting rail 35, Din rail 15 mm high	L = 2 m	35x24x15 EN 60715	98.360.0000.0	1	35x24x15 EN 60715	98.360.0000.0	1
2. End clamp TS 35, with screw	8 mm wide	9708/2 S35	Z5.522.8553.0	100	9708/2 S35	Z5.522.8553.0	100
End clamp TS 35, without screw	8 mm wide	WEF 1/35	Z5.523.9353.0	100	WEF 1/35	Z5.523.9353.0	100
3. End plate	gray	APFN 2,5 D1/2	07.312.6955.0	10	APFN 2,5 D2/2	07.312.7155.0	10
	blue						
4. Partition	gray	TWFN 2,5 D1/2	07.312.7055.0	10	TWFN 2,5 D2/2	07.312.7255.0	10
	blue						
5. Cross connector	2 pole	IVB WKF 2,5–2	Z7.280.6227.0	10	IVB WKF 2,5–2	Z7.280.6227.0	10
insulated	3 pole	IVB WKF 2,5–3	Z7.280.6327.0	10	IVB WKF 2,5–3	Z7.280.6327.0	10
	4 pole	IVB WKF 2,5–4	Z7.280.6427.0	10	IVB WKF 2,5–4	Z7.280.6427.0	10
	5 pole	IVB WKF 2,5–5	Z7.280.6527.0	10	IVB WKF 2,5–5	Z7.280.6527.0	10
	6 pole	IVB WKF 2,5–6	Z7.280.6627.0	10	IVB WKF 2,5–6	Z7.280.6627.0	10
	7 pole	IVB WKF 2,5–7	Z7.280.6727.0	20	IVB WKF 2,5–7	Z7.280.6727.0	20
	8 pole	IVB WKF 2,5–8	Z7.280.6827.0	20	IVB WKF 2,5–8	Z7.280.6827.0	20
	9 pole	IVB WKF 2,5–9	Z7.280.6927.0	20	IVB WKF 2,5–9	Z7.280.6927.0	20
	10 pole	IVB WKF 2,5–10	Z7.280.7027.0	20	IVB WKF 2,5–10	Z7.280.7027.0	20
6. Wire entry guide	0.13–0.2 mm²	LELN 2,5/1 WEISS	05.564.3753.0	100	LELN 2,5/1 WEISS	05.564.3753.0	100
	0.25–0.5 mm²	LELN 2,5/1 GRAU	05.564.3853.0	100	LELN 2,5/1 GRAU	05.564.3853.0	100
	0.75–1.0 mm²	LELN 2,5/1 SCHWARZ	05.564.3953.0	100	LELN 2,5/1 SCHWARZ	05.564.3953.0	100
7. Cover with warning symbol for 4 terminals		ADFN 2,5/4 GELB	04.343.8353.8	10	ADFN 2,5/4 GELB	04.343.8353.8	10
8. Test adapter modular		PS WKC/F	Z1.299.9753.0	10	PS WKC/F	Z1.299.9753.0	10
9. Test plug		ST 2/2,3	Z5.553.2921.0	10	ST 2/2,3	Z5.553.2921.0	10
10. Screwdriver, uninsulated		DIN 5264 B 0,6x3,5	06.502.4000.0	5	DIN 5264 B 0,6x3,5	06.502.4000.0	5
Screwdriver, uninsulated, MINI		DIN 5264 B 0,6x3,5 M	06.502.5000.0	10	DIN 5264 B 0,6x3,5 M	06.502.5000.0	10
Marking accessories see page 77–81							
[1] Follow the Ex installation instructions							

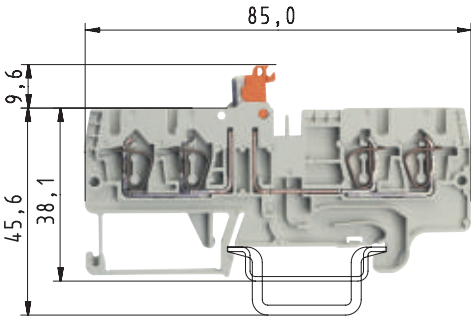

– Potential distribution with standard cross connector IVB WKF 2,5...

– Parallel connection of two cross connectors –> double jumpering

– Potential distributions are possible on one or both sides

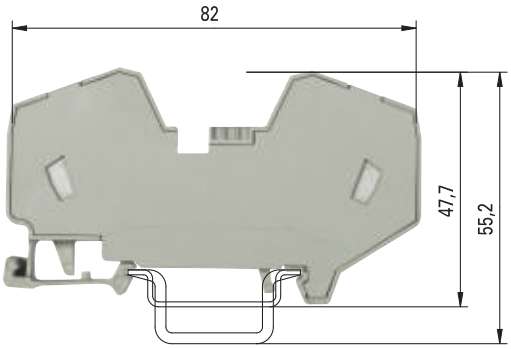

Potential distribution	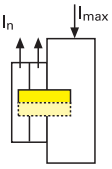		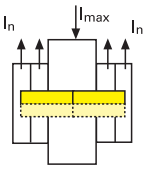	
Jumpering	one side		both sides	
	single	double	single	double
I_{max}	48	68	72	76
I_{Nblock}	24	24	24	24

$$I_{max} = \sum I_n \leq \sum I_{Nblock}$$

WKFN 2,5 TKM 2/2/35

fine-stranded	solid	V	A
0.14–2.5 mm²	0.2–4 mm²	630 V/6 kV/3	20
No. 24-12 AWG		300 V	19
No. 24-12 AWG		300 V	20

5 mm 11 mm

WKF 16/35 PV/WKFN

fine-stranded	solid/stranded	V	A
4–16 mm²	4–16 mm²	800 V/8 kV/3	76
No. 24-4 AWG		600 V	75
No. 12-4 AWG		600 V	78
4–16 mm²	4–16 mm²	690 V	64*

12 mm 15 mm

ATEX

Type	Part No.	Std. Pack
WKFN 2,5 TKM 2/2/35	56.703.5555.0	50
35x27x7,5 EN 60715	98.300.0000.0	1
35x24x15 EN 60715	98.360.0000.0	1
9708/2 S35	Z5.522.8553.0	100
WEF 1/35	Z5.523.9353.0	100
APFN 2,5 TKM D2/2	07.313.0055.0	10
TWFN 2,5 TKM D2/2	07.313.0155.0	10
IVB WKF 2,5–2	Z7.280.6227.0	10
IVB WKF 2,5–3	Z7.280.6327.0	10
IVB WKF 2,5–4	Z7.280.6427.0	10
IVB WKF 2,5–5	Z7.280.6527.0	10
IVB WKF 2,5–6	Z7.280.6627.0	10
IVB WKF 2,5–7	Z7.280.6727.0	20
IVB WKF 2,5–8	Z7.280.6827.0	20
IVB WKF 2,5–9	Z7.280.6927.0	20
IVB WKF 2,5–10	Z7.280.7027.0	20
LELN 2,5/1 WEISS	05.564.3753.0	100
LELN 2,5/1 GRAU	05.564.3853.0	100
LELN 2,5/1 SCHWARZ	05.564.3953.0	100
ADFN 2,5/4 GELB	04.343.8353.8	10
PS WKC/F	Z1.299.9753.0	10
ST 2/2,3	Z5.553.2921.0	10
DIN 5264 B 0,6x3,5	06.502.4000.0	5
DIN 5264 B 0,6x3,5 M	06.502.5000.0	10

Type	Part No.	Std. Pack
WKF 16/35/PV/WKFN	56.716.0353.0	20
35x27x7,5 EN 60715	98.300.0000.0	1
35x24x15 EN 60715	98.360.0000.0	1
9708/2 S35	Z5.522.8553.0	100
WEF 1/35	Z5.523.9353.0	100
IVB WKF 2,5–2	Z7.280.6227.0	10
IVB WKF 2,5–3	Z7.280.6327.0	10
IVB WKF 2,5–4	Z7.280.6427.0	10
IVB WKF 2,5–5	Z7.280.6527.0	10
IVB WKF 2,5–6	Z7.280.6627.0	10
IVB WKF 2,5–7	Z7.280.6727.0	20
IVB WKF 2,5–8	Z7.280.6827.0	20
IVB WKF 2,5–9	Z7.280.6927.0	20
IVB WKF 2,5–10	Z7.280.7027.0	20
ADF 16/4 GELB	04.343.6653.8	10
ST 2/2,3	Z5.553.2921.0	10
DIN 5264 B 1x5,5	06.502.4200.0	5

* Type-specific output currents upon request

Multi-tier disconnect terminal blocks with tension spring connection

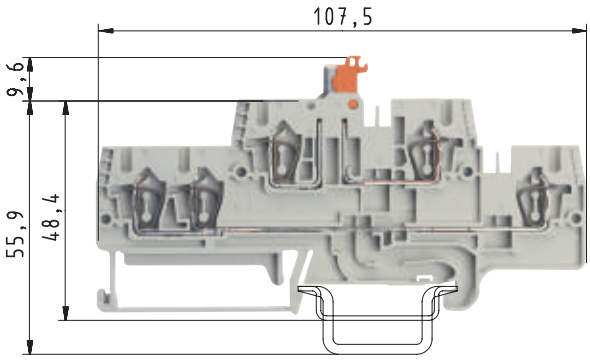

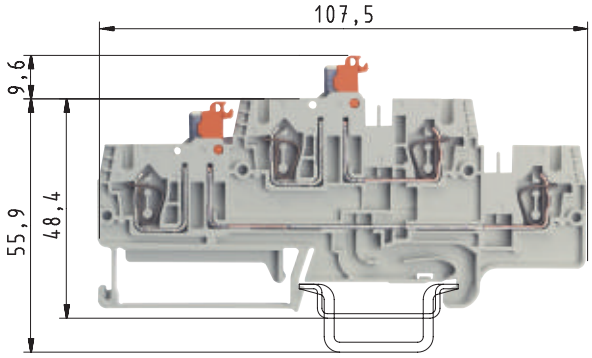

		WKFN 2,5 TKM E1/35			WKFN 2,5 TKM E2/35		
		fine-stranded	solid	V	A	fine-stranded	solid	V	A
EN 60 947-7-1:2002		0.14–2.5 mm²	0.2–4 mm²	500 V/6 kV/3	20	0.14–2.5 mm²	0.2–4 mm²	500 V/6 kV/3	19
UL ratings	field/factory wiring	No. 24-12 AWG		300 V	19	No. 24-12 AWG		300 V	19
CSA ratings		No. 24-12 AWG		300 V	20	No. 24-12 AWG		300 V	19
Width	Wire strip length	5 mm			11 mm	5 mm			11 mm
Approvals									

		Type	Part No.	Std. Pack	Type	Part No.	Std. Pack
Disconnect terminal block	gray	WKFN 2,5 TKM E1/35	56.703.6555.0	50	WKFN 2,5 TKM E2/35	56.703.6655.0	50
Accessories							
1. Mounting rail 35, Din rail 7.5 mm high	L = 2 m	35x27x7,5 EN 60715	98.300.0000.0	1	35x27x7,5 EN 60715	98.300.0000.0	1
Mounting rail 35, Din rail 15 mm high	L = 2 m	35x24x15 EN 60715	98.360.0000.0	1	35x24x15 EN 60715	98.360.0000.0	1
2. End clamp TS 35, with screw	8 mm wide	9708/2 S35	Z5.522.8553.0	100	9708/2 S35	Z5.522.8553.0	100
End clamp TS 35, without screw	8 mm wide	WEF 1/35	Z5.523.9353.0	100	WEF 1/35	Z5.523.9353.0	100
3. End plate	gray	APFN 2,5 E1/2	07.312.7755.0	10	APFN 2,5 E1/2	07.312.7755.0	10
	blue						
4. Partition	gray	TWFN 2,5 E1/2	07.312.7855.0	10	TWFN 2,5 E1/2	07.312.7855.0	10
	blue						
5. Cross connector	2 pole	IVB WKF 2,5–2	Z7.280.6227.0	10	IVB WKF 2,5–2	Z7.280.6227.0	10
insulated	3 pole	IVB WKF 2,5–3	Z7.280.6327.0	10	IVB WKF 2,5–3	Z7.280.6327.0	10
	4 pole	IVB WKF 2,5–4	Z7.280.6427.0	10	IVB WKF 2,5–4	Z7.280.6427.0	10
	5 pole	IVB WKF 2,5–5	Z7.280.6527.0	10	IVB WKF 2,5–5	Z7.280.6527.0	10
	6 pole	IVB WKF 2,5–6	Z7.280.6627.0	10	IVB WKF 2,5–6	Z7.280.6627.0	10
	7 pole	IVB WKF 2,5–7	Z7.280.6727.0	20	IVB WKF 2,5–7	Z7.280.6727.0	20
	8 pole	IVB WKF 2,5–8	Z7.280.6827.0	20	IVB WKF 2,5–8	Z7.280.6827.0	20
	9 pole	IVB WKF 2,5–9	Z7.280.6927.0	20	IVB WKF 2,5–9	Z7.280.6927.0	20
	10 pole	IVB WKF 2,5–10	Z7.280.7027.0	20	IVB WKF 2,5–10	Z7.280.7027.0	20
Vertical cross connector	1 pole	IVB WKF-V	Z7.261.1127.0	10	IVB WKF-V	Z7.261.1127.0	10
6. Wire entry guide	0.13–0.2 mm²	LELN 2,5/1 WEISS	05.564.3753.0	100	LELN 2,5/1 WEISS	05.564.3753.0	100
	0.25–0.5 mm²	LELN 2,5/1 GRAU	05.564.3853.0	100	LELN 2,5/1 GRAU	05.564.3853.0	100
	0.75–1.0 mm²	LELN 2,5/1 SCHWARZ	05.564.3953.0	100	LELN 2,5/1 SCHWARZ	05.564.3953.0	100
7. Cover with warning symbol for 4 terminals		ADFN 2,5/4 GELB	04.343.8353.8	10	ADFN 2,5/4 GELB	04.343.8353.8	10
8. Test adapter modular		PS WKC/F	Z1.299.9753.0	10	PS WKC/F	Z1.299.9753.0	10
9. Test plug		ST 2/2,3	Z5.553.2921.0	10	ST 2/2,3	Z5.553.2921.0	10
10. Screwdriver, uninsulated		DIN 5264 B 0,6x3,5	06.502.4000.0	5	DIN 5264 B 0,6x3,5	06.502.4000.0	5
Screwdriver, uninsulated, MINI		DIN 5264 B 0,6x3,5 M	06.502.5000.0	10	DIN 5264 B 0,6x3,5 M	06.502.5000.0	10
Marking accessories see page 77–81							

fasis

Fuse blocks with tension spring connection

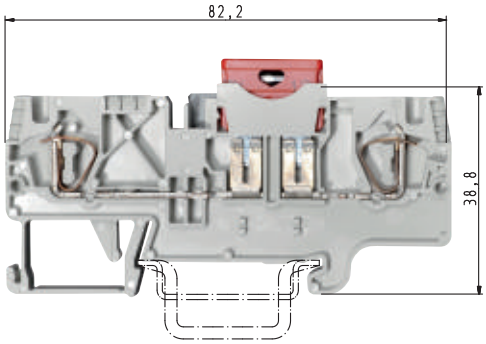

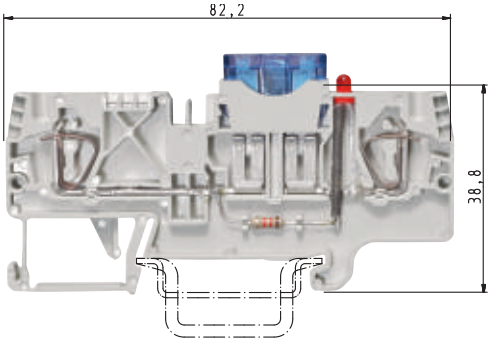

		WKFN 4 FSI				WKFN 4 FSI LED 12/24			
		fine-stranded	solid/stranded	V	A	fine-stranded	solid/stranded	V	A
EN 60 947-7-3		0.13–4 mm²	0.13–6 mm²	800 V/8 kV/3	*	0.13–4 mm²	0.13–6 mm²	800 V/8 kV/3	*
UL ratings	field/factory wiring	No. 24-10 AWG				No. 24-10 AWG			
CSA ratings		No. 24-10 AWG				No. 24-10 AWG			
KEMA 01 ATEX 2087 U	EN 60 079-0/EN 60 079-7								
Width	Wire strip length	6 mm			12 mm	6 mm			12 mm
Approvals									

		Type	Part No.	Std. Pack	Type	Part No.	Std. Pack
Fuse block for automobile fuses	gray	WKFN 4 FSI	56.704.4155.0	100			
Fuse block with indicator	gray				WKFN 4 FSI LED12	56.704.4255.0	100
Fuse block with indicator	gray				WKFN 4 FSI LED24	56.704.5355.0	100
Supply terminal	gray						
Accessories							
1. Mounting rail 35, 7,5 high	L = 2 m	35x27x7,5 EN 60715	98.300.0000.0	1	35x27x7,5 EN 60715	98.300.0000.0	1
Mounting rail 35, 15 high	L = 2 m	35x24x15 EN 60715	98.360.0000.0	1	35x24x15 EN 60715	98.360.0000.0	1
2. End clamp TS 35, with screw	8 mm wide	9708/2 S35	Z5.522.8553.0	100	9708/2 S35	Z5.522.8553.0	100
End clamp TS 35, screwless	8 mm wide	WEF 1/35	Z5.523.9353.0	100	WEF 1/35	Z5.523.9353.0	100
3. End plate	gray	APFN 4 D2/2	07.312.9055.0	10	APFN 4 D2/2	07.312.9055.0	10
Intermediate plate, 4 mm for TCP	gray				ZP/WKFN 4 TKG	07.313.1655.0	10
4. Partition plate	gray	TWFN 4 D2/2	07.312.9155.0	10	TWFN 4 D2/2	07.312.9155.0	10
5. Cross connector, for	2 blocks	IVB WKF 4–2	Z7.261.1227.0	10	IVB WKF 2,5-3	Z7.280.6327.0	10
insulated	3 blocks	IVB WKF 4–3	Z7.261.1327.0	10	IVB WKF 2,5-5	Z7.280.6527.0	10
	4 blocks	IVB WKF 4–4	Z7.261.1427.0	10	IVB WKF 2,5-7	Z7.280.6727.0	10
	5 blocks	IVB WKF 4–5	Z7.261.1527.0	10	IVB WKF 2,5-9	Z7.280.6927.0	10
	6 blocks	IVB WKF 4–6	Z7.261.1627.0	10			
	7 blocks	IVB WKF 4–7	Z7.261.1727.0	20			
	8 blocks	IVB WKF 4–8	Z7.261.1827.0	20			
	9 blocks	IVB WKF 4–9	Z7.261.1927.0	20			
	10 blocks	IVB WKF 4–10	Z7.261.1027.0	20			
6. Wire entry guide	0.13–0.2 mm²	LEL 4/1 WEISS	05.561.8553.0	100	LEL 4/1 WEISS	05.561.8553.0	100
	0.25–0.5 mm²	LEL 4/1 GRAU	05.561.8653.0	100	LEL 4/2 GRAU	05.561.8653.0	100
	0.75–1.0 mm²	LEL 4/1 SCHWARZ	05.561.8753.0	100	LEL 4/1 SCHWARZ	05.561.8753.0	100
7. Cover with warning symbol over 4 blocks		ADF 4/4 GELB	04.343.6153.8	10	ADF 4/4 GELB	04.343.6153.8	10
8. Test plug							
9. Screwdriver, uninsulated		DIN 5264 B 0,6x3,5	06.502.4000.0	5	DIN 5264 B 0,6x3,5	06.502.4000.0	5
Screwdriver, uninsulated, MINI		DIN 5264 B 0,6x3,5 M	06.502.5000.0	10	DIN 5264 B 0,6x3,5 M	06.502.5000.0	10
Marking accessories see page 77–81							
* Derating curves available on request							

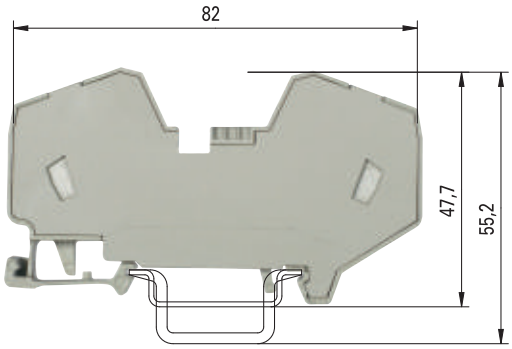

WKF 16/35 PV/WKFN

fine-stranded	solid/stranded	V	A
4 – 16 mm²	4 – 16 mm²	800 V/8 kV/3	76
No. 24-4 AWG		600 V	75
No. 12-4 AWG		600 V	78
4 – 16 mm²	4 – 16 mm²	690 V	64*
12 mm			15 mm

ATEX

The WKFN 4 FSI .. type fuse blocks takes blade-type fuses according to ISO 8820 (DIN 72581-3).

Fuse elements are not part of the Wieland Electric delivery program!

If required, we recommend:

Type	Color		Type	Part No.	Std. Pack
Blade-type automobile fuse, DC 32 V					
Electrotechnical specialized trade	black	1 A			
Motor vehicle accessory market	gray	2 A			
	violet	3 A	WKF 16/35 PV/WKFN	56.716.0353.0	20
	pink	4 A			
	beige	5 A			
	brown	7.5 A			
	red	10 A			
	blue	15 A			
	yellow	20 A	35x27x7,5 EN60715	98.300.0000.0	1
			35x27x15 EN60715	98.360.0000.0	1
Thermal circuit breaker, DC 32 V			9708 /2 S35	Z5.522.8553.0	100
ETA*, type 1610-21			WEF 1/35	Z5.523.9353.0	100
ETA*, type 1610-H2 with manual release					
		5 A			
		6 A			
		10 A			
		15 A			
		20 A			
Thermal circuit breaker, AC 250 V; DC 65 V					
ETA*, type 1180 ..		0.1 A			
		0.2 A			
		0.5 A			
		1 A			
		2 A			
		3 A			
		4 A			
		6 A	ADF 16/4 GELB	04.343.6653.8	10
		8 A			
		10 A	DIN 5264 B 1,0x5,5	06.502.4200.0	10

* E-T-A Elektrotechnische Apparate GmbH, www.e-t-a.de

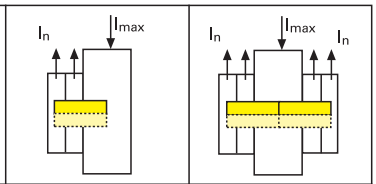

Jumpering	one side		both sides	
	single	double	single	double
I_{max}	64	76	76	76
I_{Nblock}	32	32	32	32

$$I_{max} = \sum I_n \leq \sum I_{Nblock}$$

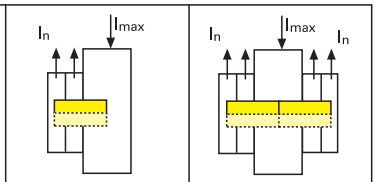

Jumpering	one side		both sides	
	single	double	single	double
I_{max}	64	76	76	76
I_{Nblock}	32	32	32	32

$$I_{max} = \sum I_n \leq \sum I_{Nblock}$$

Fuse blocks with tension spring connection

[1] When selecting G fuse inserts, make sure that the specified maximum power is not exceeded. The current is determined by the inserted fuse.
[2] The voltage range is determined by the built-in LED display.
Depending on the application and the installation method, the circumstances for increased temperature must be checked in the closed fuse holders.

Higher ambient temperatures are an additional load for the fuse inserts. Therefore, the reduction of the rated current must be considered accordingly in these applications.

Indicator (24 V): LED, red
current consumption: 10.3 mA
Indicator (220 V): LED, red
current consumption: 0.3 mA

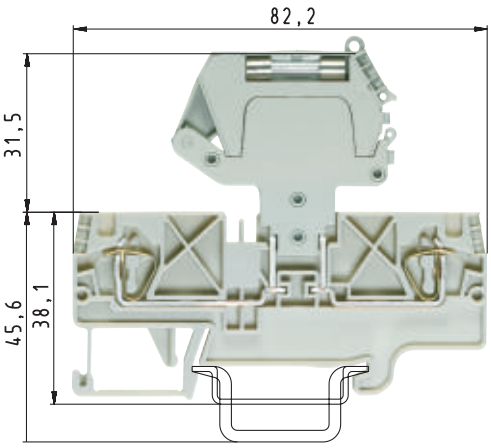

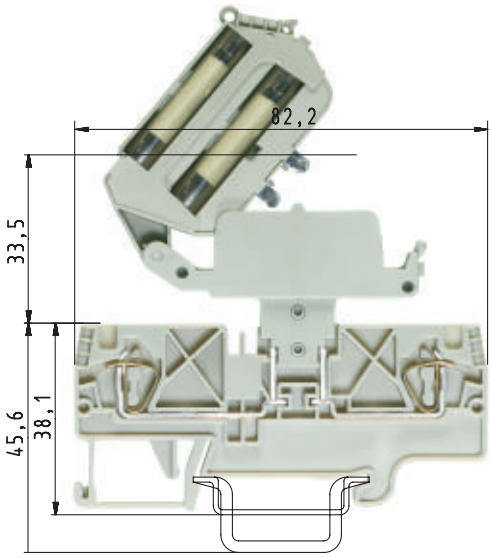

	WKFN 4 TKG with THSi 5 x 20				WKFN 4 TKG with THSi 6,3 x 32			
	fine-stranded	solid	V	A	fine-stranded	solid	V	A
EN 60 947-7-3:2002	0.13–4 mm²	0.13–6 mm²	500 V/8 kV/3	[1]	0.13–4 mm²	0.13–6 mm²	500 V/8 kV/3	[1]
UL ratings	field/factory wiring							
CSA ratings								
KEMA 01 ATEX 2087 U[1]	EN 60 079-0/EN 60 079-7							
Width	Wire strip length	6 mm		11 mm	6 mm			11 mm
Approvals		pending			pending			

		Type	Part No.	Std. Pack	Type	Part No.	Std. Pack
Disconnect ground block	gray	WKFN 4 TKG/35	56.704.4055.0	100	WKFN 4 TKG/35	56.704.4055.0	100
Fuse disconnect lever		THSI 5x20	Z1.298.1053.0	10	THSI 6,3x32	Z1.298.1653.0	10
Fuse disconnect lever with LED 12–24 V[2]		THSI 5x20 LED24	Z1.298.1153.0	10	THSI 6,3x32 LED24	Z1.298.1753.0	10
Fuse disconnect lever with LED 24–60 V[2]		THSI 5x20 LED60	Z1.298.1253.0	10	THSI 6,3x32 LED60	Z1.298.1853.0	10
Fuse disconnect lever with GL 110–250 V[2]		THSI 5x20 GL250	Z1.298.1353.0	10	THSI 6,3x32 GL250	Z1.298.1953.0	10
Fuse disconnect lever with GL 500 V[2]					THSI 6,3x32 GL500	Z1.298.2053.0	10
Supply block	gray						
Accessories							
1. Mounting rail 35, 7.5 mm high	L = 2 m	35x27x7,5 EN 60715	98.300.0000.0	1	35x27x7,5 EN 60715	98.300.0000.0	1
Mounting rail 35, 15 mm high	L = 2 m	35x24x15 EN 60715	98.360.0000.0	1	35x24x15 EN 60715	98.360.0000.0	1
2. End clamp TS 35, with screw	8 mm wide	9708/2 S35	Z5.522.8553.0	100	9708/2 S35	Z5.522.8553.0	100
End clamp TS 35, screwless	8 mm wide	WEF 1/35	Z5.523.9353.0	100	WEF 1/35	Z5.523.9353.0	100
3. End plate	gray	APFN 4 D2/2	07.312.9055.0	10	APFN 4 D2/2	07.312.9055.0	10
Intermediate plate, 4 mm wide	blue				ZP/WKFN 4 TKG	07.313.1655.0	10
4. Partition plate	gray	TWFN 4 D2/2	07.312.9155.0	10	TWFN 4 D2/2	07.312.9155.0	10
5. Cross connector	2 pole	IVB WKF 4-2	Z7.261.1227.0	10	IVB WKF 4-2	Z7.261.1227.0	10
insulated	3 pole	IVB WKF 4-3	Z7.261.1327.0	10	IVB WKF 4-3	Z7.261.1327.0	10
	4 pole	IVB WKF 4-4	Z7.261.1427.0	10	IVB WKF 4-4	Z7.261.1427.0	10
	5 pole	IVB WKF 4-5	Z7.261.1527.0	10	IVB WKF 4-5	Z7.261.1527.0	10
	6 pole	IVB WKF 4-6	Z7.261.1627.0	10	IVB WKF 4-6	Z7.261.1627.0	10
	7 pole	IVB WKF 4-7	Z7.261.1727.0	20	IVB WKF 4-7	Z7.261.1727.0	20
	8 pole	IVB WKF 4-8	Z7.261.1827.0	20	IVB WKF 4-8	Z7.261.1827.0	20
	9 pole	IVB WKF 4-9	Z7.261.1927.0	20	IVB WKF 4-9	Z7.261.1927.0	20
	10 pole	IVB WKF 4-10	Z7.261.2027.0	20	IVB WKF 4-10	Z7.261.2027.0	20
6. Wire entry guide	0.13–0.2 mm²	LEL 4/1 WEISS	05.561.8553.0	100	LEL 4/1 WEISS	05.561.8553.0	100
	0.25–0.5 mm²	LEL 4/2 GRAU	05.561.8653.0	100	LEL 4/2 GRAU	05.561.8653.0	100
	0.75–1.0 mm²	LEL 4/3 SCHWARZ	05.561.8753.0	100	LEL 4/3 SCHWARZ	05.561.8753.0	100
7. Cover with warning symbol over 4 blocks		ADF 4/4 GELB	04.343.6153.8	10	ADF 4/4 GELB	04.343.6153.8	10
8. Test plug		ST 2/2,3	Z5.553.2921.0	10	ST 2/2,3	Z5.553.2921.0	10
9. Screwdriver, uninsulated		DIN 5264 B 0,6x3,5	06.502.4000.0	5	DIN 5264 B 0,6x3,5	06.502.4000.0	5
Screwdriver, uninsulated, MINI		DIN 5264 B 0,6x3,5 M	06.502.5000.0	10	DIN 5264 B 0,6x3,5 M	06.502.5000.0	10
Marking accessories see page 77–81							

Fuse blocks with tension spring connection

[1] When selecting G fuse inserts, make sure that the specified maximum power is not exceeded.
The current is determined by the inserted fuse.

[2] The voltage range is determined by the built-in LED display. Depending on the application and the installation method, the conditions for temperature rise must be checked in the closed fuse holders.
Higher ambient temperatures are an additional load for the fuse inserts. Therefore, the reduction of the rated current must be considered accordingly in these applications.

Indicator (24 V): LED, red
current consumption: 10.3 mA

Indicator (220 V): LED, red
current consumption: 0.3 mA

[3] Periodic peak voltage 1000 V

Direction of the diode:	Anode	Cathode[5]
	Cathode	Anode[6]

[4] The current load is determined by the component installed.

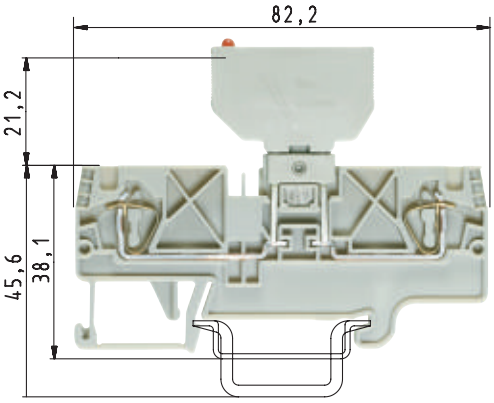

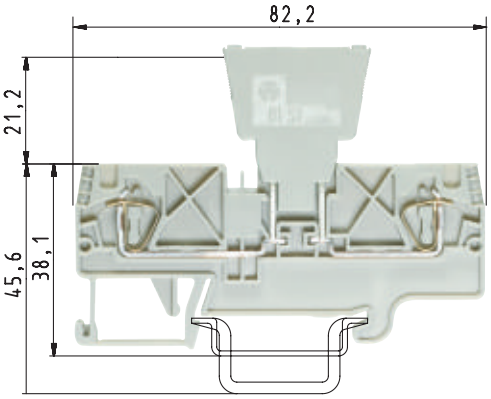

	WKFN 4 TKG with SiST				WKFN 4 TKG with DiST			
	fine stranded	solid	V	A	fine-stranded	solid	V	A
EN 60 947-7-3:2002	0.13–4 mm²	0.13–6 mm²	500 V/8 kV/3[2]	[1]	0.13–4 mm²	0.13–6 mm²	500 V/8 kV/3[3]	[4]
UL ratings	field/factory wiring							
CSA ratings								
KEMA 01 ATEX 2087 U[1]	EN 60 079-0/EN 60 079-7							
Width	Wire strip length							
	6 mm			11 mm	6 mm			11 mm
Approvals	pending				pending			

Type	Part No.	Std. Pack	Type	Part No.	Std. Pack	Type	Part No.	Std. Pack
Disconnect ground block		gray	WKFN 4 TKG/35	56.704.4055.0	100	WKFN 4 TKG/35	56.704.4055.0	100
Fuse holder for fuse 5 x 20		gray	Si ST	Z1.299.4055.0	10			
Fuse holder with indicator (24 V)		gray	Si ST LED	Z1.299.4155.0	10			
Fuse holder with indicator (220 V)		gray	Si ST GL	Z1.299.4255.0	10			
Diode plug–empty	J_{max} = 10 A[4]	gray				DIST ...	Z1.299.3055.0	10
Diode plug–diode	J_{max} = 1 A[4]	gray				DIST-1 N 4007-1[5]	Z1.299.3155.0	10
Diode plug–diode	J_{max} = 1 A[4]	gray				DIST-1 N 4007-2[6]	Z1.299.3355.0	10
Diode plug with jumper	J_{max} = 10 A[4]	gray				DIST-D	Z1.299.3255.0	10
Accessories								
1. Mounting rail 35, 7.5 mm high		L = 2 m	35x27x7,5 EN 60715	98.300.0000.0	1	35x27x7,5 EN 60715	98.300.0000.0	1
Mounting rail 35, 15 mm high		L = 2 m	35x24x15 EN 60715	98.360.0000.0	1	35x24x15 EN 60715	98.360.0000.0	1
2. End clamp TS 35, with screw		8 mm wide	9708/2 S35	Z5.522.8553.0	100	9708/2 S35	Z5.522.8553.0	100
End clamp TS 35, screwless		8 mm wide	WEF 1/35	Z5.523.9353.0	100	WEF 1/35	Z5.523.9353.0	100
3. End plate		gray	APFN 4 D2/2	07.312.9055.0	10	APFN 4 D2/2	07.312.9055.0	10
4. Partition plate			TWFN 4 D2/2	07.312.9155.0	10	TWFN 4 D2/2	07.312.9155.0	10
5. Cross connector		2 pole	IVB WKF 4-2	Z7.261.1227.0	10	IVB WKF 4-2	Z7.261.1227.0	10
insulated		3 pole	IVB WKF 4-3	Z7.261.1327.0	10	IVB WKF 4-3	Z7.261.1327.0	10
		4 pole	IVB WKF 4-4	Z7.261.1427.0	10	IVB WKF 4-4	Z7.261.1427.0	10
		5 pole	IVB WKF 4-5	Z7.261.1527.0	10	IVB WKF 4-5	Z7.261.1527.0	10
		6 pole	IVB WKF 4-6	Z7.261.1627.0	10	IVB WKF 4-6	Z7.261.1627.0	10
		7 pole	IVB WKF 4-7	Z7.261.1727.0	20	IVB WKF 4-7	Z7.261.1727.0	20
		8 pole	IVB WKF 4-8	Z7.261.1827.0	20	IVB WKF 4-8	Z7.261.1827.0	20
		9 pole	IVB WKF 4-9	Z7.261.1927.0	20	IVB WKF 4-9	Z7.261.1927.0	20
		10 pole	IVB WKF 4-10	Z7.261.2027.0	20	IVB WKF 4-10	Z7.261.2027.0	20
6. Wire entry guide		0.13–0.2 mm²	LEL 4/1 WEISS	05.561.8553.0	100	LEL 4/1 WEISS	05.561.8553.0	100
		0.25–0.5 mm²	LEL 4/2 GRAU	05.561.8653.0	100	LEL 4/2 GRAU	05.561.8653.0	100
		0.75–1.0 mm²	LEL 4/3 SCHWARZ	05.561.8753.0	100	LEL 4/3 SCHWARZ	05.561.8753.0	100
7. Cover with warning symbol over 4 blocks			ADF 4/4 GELB	04.343.6153.8	10	ADF 4/4 GELB	04.343.6153.8	10
8. Test plug			ST 2/2,3	Z5.553.2921.0	10	ST 2/2,3	Z5.553.2921.0	10
9. Screwdriver, uninsulated			DIN 5264 B 0,6x3,5	06.502.4000.0	5	DIN 5264 B 0,6x3,5	06.502.4000.0	5
Screwdriver, uninsulated, MINI			DIN 5264 B 0,6x3,5 M	06.502.5000.0	10	DIN 5264 B 0,6x3,5 M	06.502.5000.0	10

DIN rail terminal blocks with plug-in connection

The system

- **Rated current up to 32 A**
- **Connection cross-section 4 mm²**
- **Width 5 mm**

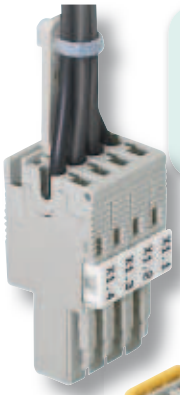

The socket plugs

For application specific wire harness assemblies, or single pole test plug.

The terminals

Modular din rail mount terminals for universal use with pluggable connectors, all with spring clamp termination technology.

In addition to the pluggable connection, a spring clamp termination also is available to use the block as a standard feed-through terminal.

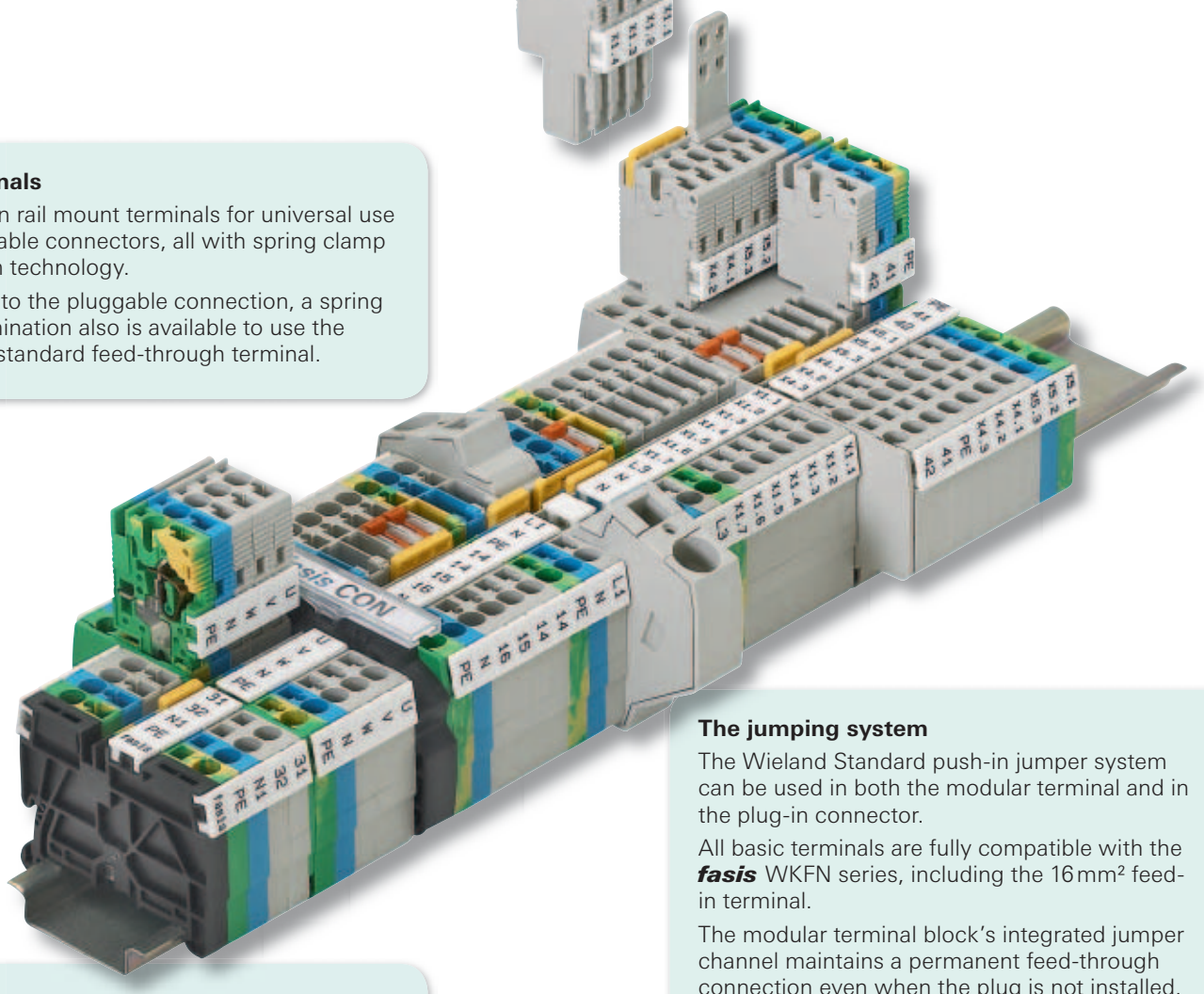

The jumping system

The Wieland Standard push-in jumper system can be used in both the modular terminal and in the plug-in connector.

All basic terminals are fully compatible with the ***fasis*** WKFN series, including the 16 mm² feed-in terminal.

The modular terminal block's integrated jumper channel maintains a permanent feed-through connection even when the plug is not installed.

The labeling system

All termination points can be clearly labeled using the standard Wieland labeling system.

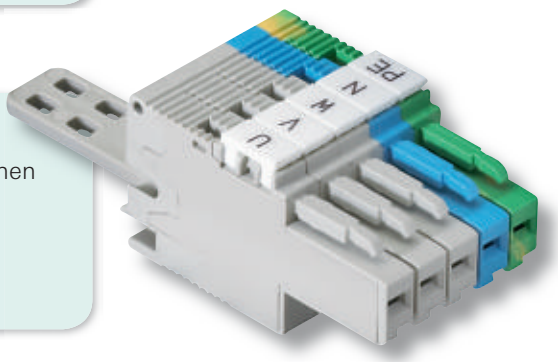

Integrated safety

Touch protection of all components, even when not connected, IP 20 when connected.

All plug connectors have a built-in latching mechanism and coding option – no further accessories required.

DIN rail terminal blocks with plug-in connection

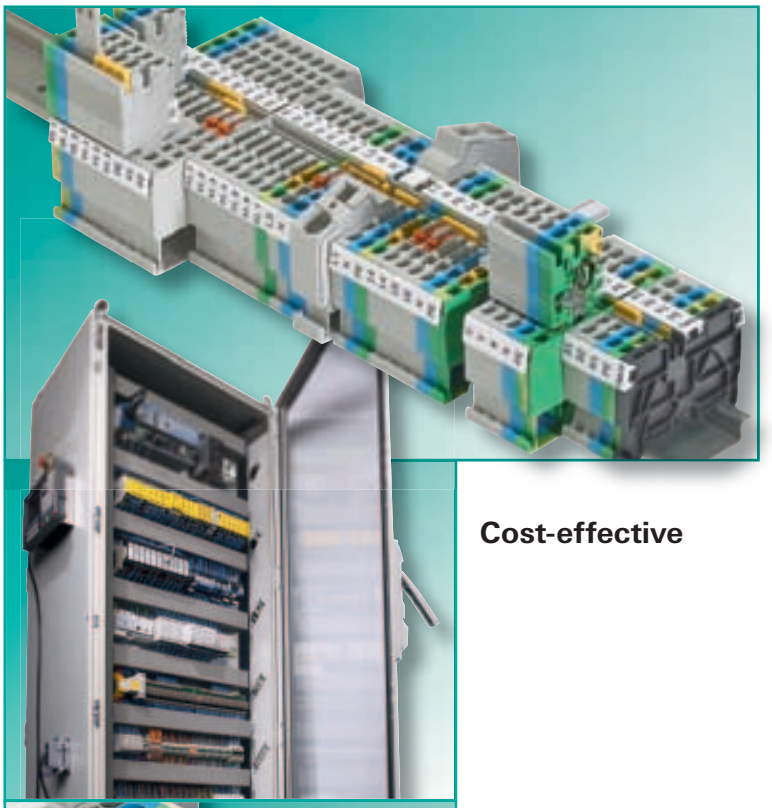

Plug & Play in the control cabinet – with *fasis* CON

fasis CON is a DIN rail terminal block system with a pluggable outgoing feeder, which offers modular, cost-saving solutions with advantages in every phase of the service life of an electrical system.

fasis CON is a fully compatible part of the established ***fasis*** WKFN system. Both the terminal and the plug connector possess the high-performance features of ***fasis*** WKFN.

fasis CON consists of feed-through blocks and PE DIN rail terminal blocks with different numbers of wire terminations and pluggable outgoing feeders for the ***fasis*** CON socket connectors.

fasis CON is a cost-effective, high-performance and pluggable system solution.

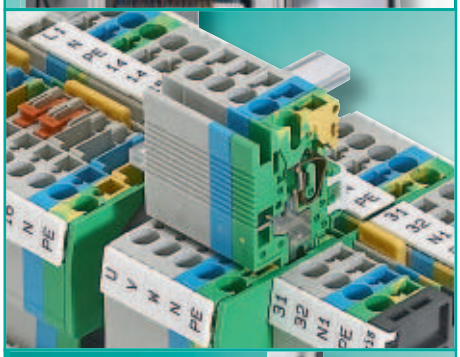

Cost-effective

- Cost-optimized installation and maintenance times
- Small numbers of components
- Can be assembled individually
- Pre-assembled modules

High-performance

- Range of terminals up to 4 mm²
- Rated current up to 32 A*
- Rated voltage 500 V
- Total width only 5 mm

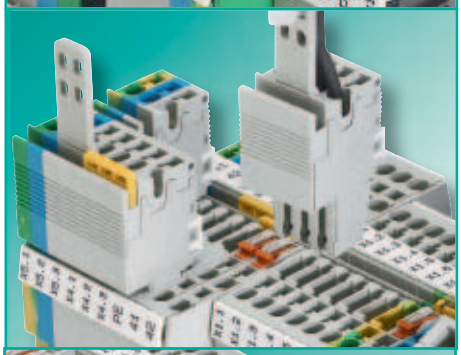

Pluggable

- Complex systems can be brought on-line quickly and cost-effectively with pluggable technology
- Functional units can be tested easily
- Modules can be replaced quickly if faults occur
- Systems can be expanded with pluggable technology

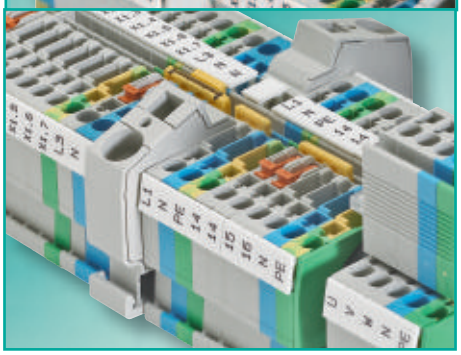

Complete system

- Uniform accessories
- Coded to prevent mismating
- All components can be bridged
- Comprehensive and clear labeling
- Can be combined with ***fasis*** WKFN

* Observe the derating curve, available in our e-catalog at www.wieland-electric.com

DIN rail terminal blocks with plug-in connection

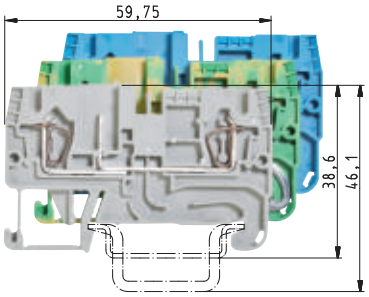

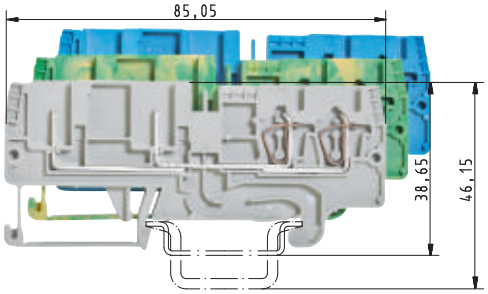

		WKFN 2,5 F/P/F				WKFN 2,5 2P/2F			
		fine-stranded	solid	V	A	fine-stranded	solid	V	A
EN 60947-7-1 / EN 60947-7-2		0.13 - 4 mm²	0.13 - 4 mm²	500 V/8 kV/3	32*	0.13 - 4 mm²	0.13 - 4 mm²	500 V/8 kV/3	32*
UL ratings	field/factory wiring								
CSA ratings									
Width	Wire strip length	5 mm			11 mm	5 mm			11 mm
Approvals									

		Type	Part No.	Std. Pack	Type	Part No.	Std. Pack
Feed-through block F/P/F	gray	WKFN 2,5 F/P/F	56.703.2355.0	100			
	blue	WKFN 2,5 F/P/F	56.703.2355.6	100			
Ground block	yellow/green	WKFN 2,5 F/P/F-SL	56.703.2455.0	100			
Feed-through block 2P/2F	gray				WKFN 2,5 2P/2F	56.703.2155.0	100
	blue				WKFN 2,5 2P/2F	56.703.2155.6	100
Ground block	yellow/green				WKFN 2,5 2P/2F-SL	56.703.2255.0	100
Multi-tier block E/F/P	gray						
Multi-tier block, vertically connected	black						
Multi-tier ground block	yellow/green						
Accessories							
1. Mounting rail 35, 7.5 mm high	L = 2 m	35x27x7,5 EN60715	98.300.0000.0	1	35x27x7,5 EN60715	98.300.0000.0	1
Mounting rail 35, 15 mm high	L = 2 m	35x27x15 EN60715	98.360.0000.0	1	35x27x15 EN60715	98.360.0000.0	1
2. End clamp TS 35, with screw	8 mm wide	9708 /2 S35	Z5.522.8553.0	100	9708 /2 S35	Z5.522.8553.0	100
End clamp TS 35, without screw	8 mm wide	WEF 1/35	Z5.523.9353.0	100	WEF 1/35	Z5.523.9353.0	100
3. End plate	gray	APFN 2,5 D1/2	07.312.6955.0	10	APFN 2,5 TKM D2/2	07.313.0055.0	10
	blue	APFN 2,5 D1/2 BLAU	07.312.6955.6	10			
4. Partition plate	gray	TWFN 2,5 D1/2	07.312.7050.0	10	TWFN 2,5 TKM D2/2	07.313.0155.0	10
5. Cross connector, insulated	2 blocks	IVB WKF 2,5-2	Z7.280.6227.0	10	IVB WKF 2,5-2	Z7.280.6227.0	10
	3 blocks	IVB WKF 2,5-3	Z7.280.6327.0	10	IVB WKF 2,5-3	Z7.280.6327.0	10
	4 blocks	IVB WKF 2,5-4	Z7.280.6427.0	10	IVB WKF 2,5-4	Z7.280.6427.0	10
	5 blocks	IVB WKF 2,5-5	Z7.280.6527.0	10	IVB WKF 2,5-5	Z7.280.6527.0	10
	6 blocks	IVB WKF 2,5-6	Z7.280.6627.0	10	IVB WKF 2,5-6	Z7.280.6627.0	10
	7 blocks	IVB WKF 2,5-7	Z7.280.6727.0	20	IVB WKF 2,5-7	Z7.280.6727.0	20
	8 blocks	IVB WKF 2,5-8	Z7.280.6827.0	20	IVB WKF 2,5-8	Z7.280.6827.0	20
	9 blocks	IVB WKF 2,5-9	Z7.280.6927.0	20	IVB WKF 2,5-9	Z7.280.6927.0	20
	10 blocks	IVB WKF 2,5-10	Z7.280.7027.0	20	IVB WKF 2,5-10	Z7.280.7027.0	20
6. Wire entry guide	0.13 - 0.2 mm²	LELN 2,5/1 WEISS	05.564.3755.0	100	LELN 2,5/1 WEISS	05.564.3755.0	100
	0.25 - 0.5 mm²	LELN 2,5/1 GRAU	05.564.3855.0	100	LELN 2,5/1 GRAU	05.564.3855.0	100
	0.75 - 1.0 mm²	LELN 2,5/1 SCHWARZ	05.564.3955.0	100	LELN 2,5/1 SCHWARZ	05.564.3955.0	100
7. Cover with warning symbol over 4 blocks		ADFN 2,5/4 GELB	04.343.8353.8	10	ADFN 2,5/4 GELB	04.343.8353.8	10
8. Test adapter, modular		PS WKC/F	Z1.299.9753.0	10	PS WKC/F	Z1.299.9753.0	10
Marking accessories see page 77–81							

* Observe the derating curve, available in our e-catalog at www.wieland-electric.com

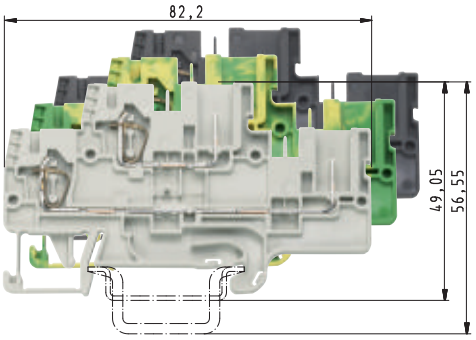

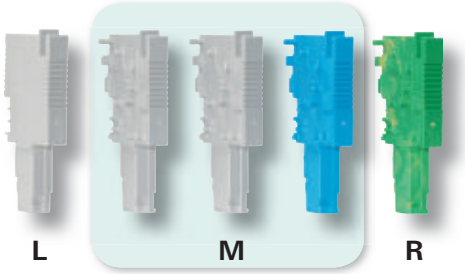

WKFN 2,5 E/../../..

fine-stranded	solid	V	A
0.13 - 4 mm²	0.13 - 4 mm²	500 V/6 kV/3	22
No. 22-12 AWG			
No. 24-12 AWG			
5 mm			11 mm

pending

WBF 2,5/../..

fine-stranded	solid	V	A
0.13 - 4 mm²	0.13 - 4 mm²	500 V/8 kV/3	32*
5 mm			11 mm

Type	Part No.	Std. Pack			Type	Part No.	Std. Pack
			Socket plug LEFT	gray	WBF 2,5 1/L/GR	Z1.110.8955.0	50
				blue	WBF 2,5 1/L/BL	Z1.110.8955.6	50
				yellow/green	WBF 2,5 1/L/SL	Z1.110.8955.7	50
			Socket plug MIDDLE	gray	WBF 2,5 1/M/GR	Z1.110.8855.0	50
				blue	WBF 2,5 1/M/BL	Z1.110.8855.6	50
				yellow/green	WBF 2,5 1/M/SL	Z1.110.8855.7	50
WKFN 2,5 E/F/P	56.703.3455.0	100	**Socket plug RIGHT**	gray	WBF 2,5 1/R/GR	Z1.110.9055.0	50
WKFN 2,5 E/VB/F/P	56.703.3555.1	100		blue	WBF 2,5 1/R/BL	Z1.110.9055.6	50
WKFN 2,5 E/F/P/SL	56.703.3655.0	100		yellow/green	WBF 2,5 1/R/SL	Z1.110.9055.7	50
			Socket plug pre-assembled,	gray			
35x27x7,5 EN60715	98.300.0000.0	1		1 pole	WBF 2,5-1	59.903.0155.0	50
35x27x15 EN60715	98.360.0000.0	1		2 pole	WBF 2,5-2	59.903.0255.0	50
9708 /2 S35	Z5.522.8553.0	100		3 pole	WBF 2,5-3	59.903.0355.0	50
WEF 1/35	Z5.523.9353.0	100		4 pole	WBF 2,5-4	59.903.0455.0	50
APFN 2,5 E	07.312.7355.0	10		5 pole	WBF 2,5-5	59.903.0555.0	50
				6 pole	WBF 2,5-6	59.903.0655.0	25
TWFN 2,5 E	07.312.7455.0	10		7 pole	WBF 2,5-7	59.903.0755.0	25
IVB WKF 2,5-2	Z7.280.6227.0	10		8 pole	WBF 2,5-8	59.903.0855.0	25
IVB WKF 2,5-3	Z7.280.6327.0	10		9 pole	WBF 2,5-9	59.903.0955.0	25
IVB WKF 2,5-4	Z7.280.6427.0	10		10 pole	WBF 2,5-10	59.903.1055.0	25
IVB WKF 2,5-5	Z7.280.6527.0	10					
IVB WKF 2,5-6	Z7.280.6627.0	10					
IVB WKF 2,5-7	Z7.280.6727.0	20					
IVB WKF 2,5-8	Z7.280.6827.0	20					
IVB WKF 2,5-9	Z7.280.6927.0	20					
IVB WKF 2,5-10	Z7.280.7027.0	20					
LELN 2,5/1 WEISS	05.564.3755.0	100	**Accessories:**				
LELN 2,5/1 GRAU	05.564.3855.0	100	1. Strain relief		Z-WBF	05.567.9155.0	10
LELN 2,5/1 SCHWARZ	05.564.3955.0	100	2. Cross connector, insulated		see WKFN 2,5 F/P/F		
ADFN 2,5/4 GELB	04.343.8353.8	10	3. Screwdriver, uninsulated		DIN 5264 B 0,6x3,5	06.502.4000.0	10
PS WKC/F	Z1.299.9753.0	10	Screwdriver, MINI		DIN 5264 B 0,6x3,5 M	06.502.5000.0	10

* Observe the derating curve, available in our e-catalog at www.wieland-electric.com

DIN rail terminal blocks with tension spring and pluggable connections

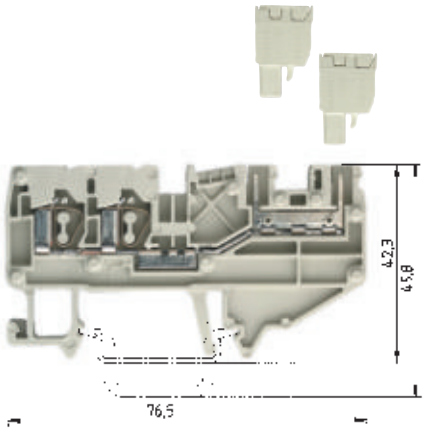

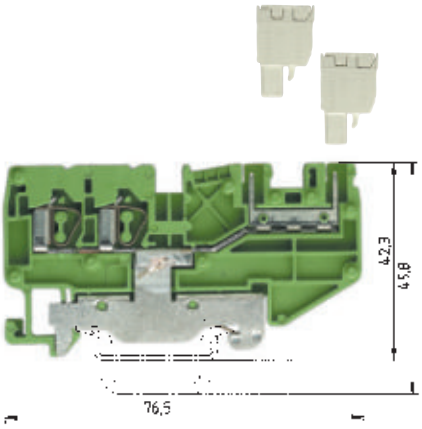

		WKF 2,5 D2/8113/35			WKF 2,5 D2/8113/SL/35		
		fine-stranded	solid	V	fine-stranded	solid	V
EN 60 947-7-1/DIN VDE 0611 T1		0.13–2.5 mm²	0.13–4 mm²	250 V/4 kV/3	0.13–2.5 mm²	0.13–4 mm²	250 V/4 kV/3
UL ratings	field/factory wiring	No. 22-12 AWG		300 V	No. 22-12 AWG		300 V
CSA ratings		No. 24-12 AWG		300 V	No. 24-12 AWG		300 V
Width	Wire strip length	5 mm		11 mm	5 mm		11 mm
Approvals							

		Type	Part No.	Std. Pack	Type	Part No.	Std. Pack
Duo feed-through block	gray	WKF 2,5 D2/8113/35	56.703.2053.0	100			
	blue	WKF 2,5 D2/8113/35 BLAU	56.703.2053.6	100			
Duo ground block	yellow/green				WKF 2,5 D2/8113 SL/35	56.703.9253.0	100
Multi-tier block	gray						
Accessories							
1. Mounting rail 35, 7.5 mm high	L = 2 m	35x27x7,5 EN 60715	98.300.0000.0	1	35x27x7,5 EN 60715	98.300.0000.0	1
Mounting rail 35, 15 mm high	L = 2 m	35x24x15 EN 60715	98.360.0000.0	1	35x24x15 EN 60715	98.360.0000.0	1
2. End clamp TS 35, with screw	8 mm wide	9708/2 S35	Z5.522.8553.0	100	9708/2 S35	Z5.522.8553.0	100
End clamp TS 35, screwless	8 mm wide	WEF 1/35	Z5.523.9353.0	100	WEF 1/35	Z5.523.9353.0	100
3. End plate	gray	APF 2,5/D2/8113	07.312.4153.0	10	APF 2,5/D2/8113	07.312.4153.0	10
	blue	APF 2,5/D2/8113	07.312.4153.6	10			
4. Partition plate	gray						
	blue						
5. Cross connector	2 pole	IVB WKF 2,5–2	Z7.280.6227.0	10			
insulated	3 pole	IVB WKF 2,5–3	Z7.280.6327.0	10			
	4 pole	IVB WKF 2,5–4	Z7.280.6427.0	10			
	5 pole	IVB WKF 2,5–5	Z7.280.6527.0	10			
	6 pole	IVB WKF 2,5–6	Z7.280.6627.0	10			
	7 pole	IVB WKF 2,5–7	Z7.280.6727.0	20			
	8 pole	IVB WKF 2,5–8	Z7.280.6827.0	20			
	9 pole	IVB WKF 2,5–9	Z7.280.6927.0	20			
	10 pole	IVB WKF 2,5–10	Z7.280.7027.0	20			
6. Wire entry guide	0.13–0.2 mm²	LEL 2,5/1 WEISS	05.561.6553.0	100	LEL 2,5/1 WEISS	05.561.6553.0	100
	0.25–0.5 mm²	LEL 2,5/2 GRAU	05.561.6653.0	100	LEL 2,5/2 GRAU	05.561.6653.0	100
	0.75–1.0 mm²	LEL 2,5/3 SCHWARZ	05.561.6753.0	100	LEL 2,5/3 SCHWARZ	05.561.6753.0	100
7. Cover with warning symbol over 4 blocks		ADF 2,5/4 GELB	04.343.6053.8	10	ADF 2,5/4 GELB	04.343.6053.8	10
Cover with warning symbol over 4 poles		AD 8113/4 GELB	04.343.6853.8	10	AD 8113/4 GELB	04.343.6853.8	10
8. Screwdriver, uninsulated		DIN 5264 B 0,6x3,5	06.502.4000.0	5	DIN 5264 B 0,6x3,5	06.502.4000.0	5
9. Coding strip			05.561.0053.0	100		05.561.0053.0	100
Marking accessories see page 77–81							

wiecon PC board connector

Spring clamp/tension spring system

5 mm spacing 2.5 mm²

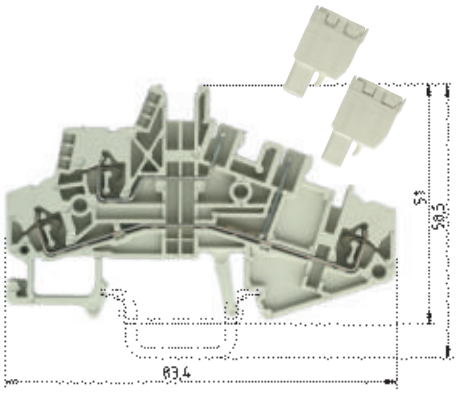

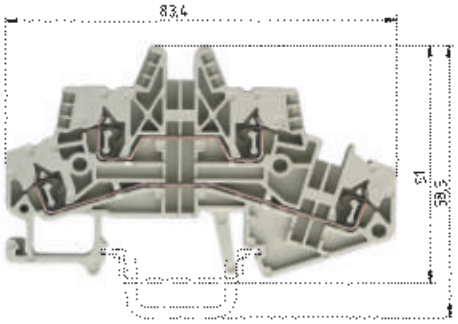

Rated voltages:
VDE 0110/01.89

250 V/4 kV/3 –
Overvoltage category III

400 V/4 kV/2 –
Overvoltage category II

1000 V/4 kV/1 –
Overvoltage category I

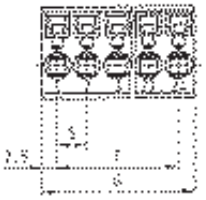

WKF 1,5 E/8113/35

fine-stranded	solid	V	A
0.13–1.5 mm²	0.13–2.5 mm²	250 V/4 kV/3	16
No. 22-14			
No. 24-14			

5 mm 8 mm

WKF 1,5 E/35

fine-stranded	solid	V	A
0.13–1.5 mm²	0.13–2.5 mm²	400 V/6 kV/3	17,5
No. 30-14 AWG		300 V	15 A
No. 30-14 AWG		600 V	15 A

5 mm 8 mm

Typ 8113 BFK

fine-stranded	solid	V	A
0.13–2.5 mm²	0.13–4 mm²		12
No. 22-12 AWG		300 V	12 A

5 mm 9 mm

Type	Part No.	Std. Pack	Type	Part No.	Std. Pack	Std. Pack	G	T	Pole	Part No.
						5 mm spacing				unmarked
						100	10,00	5,00	2	25.920.3253.0
						100	15,00	10,00	3	25.920.3353.0
WKF 1,5 E/8113/35	56.702.2053.0	100	WKF 1,5 E/35	56.702.7053.0	100	50	20,00	15,00	4	25.920.3453.0
						50	25,00	20,00	5	25.920.3553.0
						50	30,00	25,00	6	25.920.3653.0
35x27x7,5 EN 60715	98.300.0000.0	1	35x27x7,5 EN 60715	98.300.0000.0	1	50	35,00	30,00	7	25.920.3753.0
35x24x15 EN 60715	98.360.0000.0	1	35x24x15 EN 60715	98.360.0000.0	1	50	40,00	35,00	8	25.920.3853.0
9708/2 S35	Z5.522.8553.0	100	9708/2 S35	Z5.522.8553.0	100	50	45,00	40,00	9	25.920.3953.0
WEF 1/35	Z5.523.9353.0	100	WEF 1/35	Z5.523.9353.0	100	50	50,00	45,00	10	25.920.4053.0
APF 1,5/E/8113	07.312.4753.0	10	APF 1,5 E	07.312.3553.0	10	50	55,00	50,00	11	25.920.4153.0
						50	60,00	55,00	12	25.920.4253.0
			TWF 1,5 E	07.312.3653.0	10	50	65,00	60,00	13	25.920.4353.0
						50	70,00	65,00	14	25.920.4453.0
IVB WKF 2,5–2	Z7.280.6227.0	10	IVB WKF 2,5–2	Z7.280.6227.0	10	50	75,00	70,00	15	25.920.4553.0
IVB WKF 2,5–3	Z7.280.6327.0	10	IVB WKF 2,5–3	Z7.280.6327.0	10	50	80,00	75,00	16	25.920.4653.0
IVB WKF 2,5–4	Z7.280.6427.0	10	IVB WKF 2,5–4	Z7.280.6427.0	10					marked
IVB WKF 2,5–5	Z7.280.6527.0	10	IVB WKF 2,5–5	Z7.280.6527.0	10	100	10,00	5,00	2	25.920.0253.0
IVB WKF 2,5–6	Z7.280.6627.0	10	IVB WKF 2,5–6	Z7.280.6627.0	10	100	15,00	10,00	3	25.920.0353.0
IVB WKF 2,5–7	Z7.280.6727.0	20	IVB WKF 2,5–7	Z7.280.6727.0	20	50	20,00	15,00	4	25.920.0453.0
IVB WKF 2,5–8	Z7.280.6827.0	20	IVB WKF 2,5–8	Z7.280.6827.0	20	50	25,00	20,00	5	25.920.0553.0
IVB WKF 2,5–9	Z7.280.6927.0	20	IVB WKF 2,5–9	Z7.280.6927.0	20	50	30,00	25,00	6	25.920.0653.0
IVB WKF 2,5–10	Z7.280.7027.0	20	IVB WKF 2,5–10	Z7.280.7027.0	20	50	35,00	30,00	7	25.920.0753.0
LEL 1,5/1 WEISS	05.562.2453.0	100	LEL 1,5/1 WEISS	05.562.2453.0	100	50	40,00	35,00	8	25.920.0853.0
LEL 1,5/2 GRAU	05.562.2553.0	100	LEL 1,5/2 GRAU	05.562.2553.0	100	50	45,00	40,00	9	25.920.0953.0
LEL 1,5/3 SCHWARZ	05.562.2653.0	100	LEL 1,5/3 SCHWARZ	05.562.2653.0	100	50	50,00	45,00	10	25.920.1053.0
ADF 1,5/4 GELB	04.343.8353.8	10	ADF 1,5/4 GELB	04.343.8353.8	10	50	55,00	50,00	11	25.920.1153.0
AD 8113/4 GELB	04.343.6853.8	10	DIN 5264 B 0,6x3,5	06.502.4000.0	5	50	60,00	55,00	12	25.920.1253.0
DIN 5264 B 0,6x3,5	06.502.4000.0	5	DIN 5264 B 0,6x3,5 M	06.502.5000.0	10	50	65,00	60,00	13	25.920.1353.0
	05.561.0053.0	100				50	70,00	65,00	14	25.920.1453.0
						50	75,00	70,00	15	25.920.1553.0
						50	80,00	75,00	16	25.920.1653.0
						17- to 24- pole configurations upon request				
						Accessories: coding piece				05.561.9153.0

Initiator and actuator blocks with tension spring connection

For machine and system control wiring, practice-oriented solutions are preferred that are primarily economical and reliable and thus contribute to the system's operational and functional safety.

fasis KOI was designed to connect the great variety of initiators and actuators to central and remote control systems. The initiator and actuator blocks of type WKF 1,5 KOI have, in particular, been conceived for the requirements in machine and system engineering. They facilitate the wiring task through clearly arranged termination points and an easily accessible and operable tension spring technology.

fasis KOI is a compact and efficient wiring system for connection purposes, potential distribution and transmission of signals from initiators and actuators.

System advantages used

- Control-compatible system solutions through accurate tuning of the connection modules' number of poles to the input and output modules of the PLC.
- Flexible fixation through snap-on to the TS35 mounting rail or screw-on of the connection module to the base board.
- Application-specific individual terminal block as a link between initiators, actuators and the PLC.

Economically designed

- Low space requirements due to compact dimensioning of the individual terminal blocks and integration of the potential distribution inside the connection module.
- Efficient installation and start-up of the wiring system by simply fitting the connection module with components, which supersedes additional connection accessories.
- Reduction of the warehousing costs due to a low variety of parts without having to forego flexibility in the application.

Service-friendly operation

- Short maintenance times for modifications of the terminal block assembly by replacing or extending individual blocks without interrupting the power supply of the other initiator and actuator blocks.
- Immediate visual monitoring of the switching states due to integrated light-emitting diodes.
- No maintenance required due to a permanently safe and dynamic terminal block connection using spring clamp technology in a tension spring system.

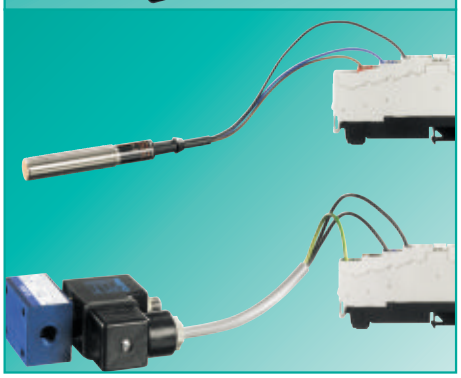

Application-related selection

- Power supply to the connection modules through supply blocks, alternatively with LEDs.
- Potential distribution through connection modules in designs for 9 (1+8) or 18 (2x(1+8)) terminal blocks.
- Initiator blocks, for example for the connection of 3-wire or 4-wire proximity or position switches, alternatively with LEDs.
- Actuator terminals, for example for the connection of magnetic valves.

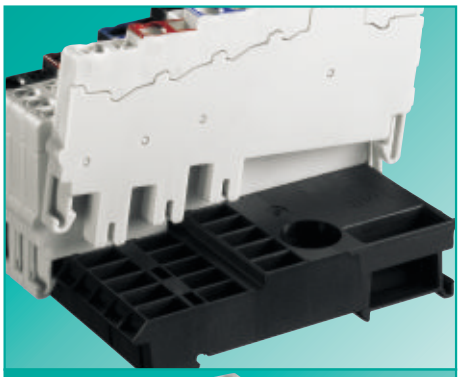

Connection module

Collect and distribute potentials

- Potential distribution is achieved quickly and safely as soon as the terminal blocks are snapped on.
- Connection rails for the plus, minus and ground or screen potential are each integrated in the connection modules.
- The system does not require any additional cross connectors.

Cover for connection modules

Collect and distribute potentials

- Unused terminal block locations can be closed with connection module covers and thus prevent accidental contact.
- The covers are delivered in 8 pole sets and can be separated individually as required.
- Protection against accidental contact according to IP20 is guaranteed when the covers are snapped on.

Wire entry guides

Connect „small cross sections“ safely

- Wire entry guides prevent the wires from being inserted too deeply (smaller than 1 mm²) and enable an easy, professional and quick installation.
- Ensure the connection of solid and fine-stranded wires smaller than 1 mm².
- Also see the accessories for DIN rail terminal blocks on page 73!

Marking system

All clamping points marked clearly

- Marking tags easily readable even with the wires connected.
- Clear assignment of wire to the termination point while wiring.
- Simplified troubleshooting for servicing.
- Individual marking with the ***wiemarc*** and ***wieplot*** marking systems.

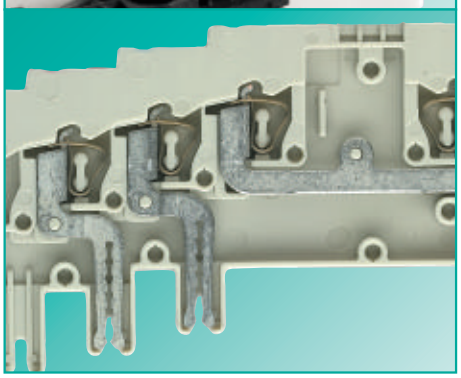

Materials

High-quality materials selected

- Special alloys enable low feed-through resistance and provide a gas-tight contact area:
  – clamping spring: stainless CrNi steel
  – current-carrying bar: tin-plated copper
- Polyamide has excellent electrical, chemical and mechanical characteristics:
  – temperature resistance: up to 120°C
  – creepage resistance: CTI 600
  – flammability class: self-extinguishing, UL94-V2

Initiator and actuator blocks with tension spring connection

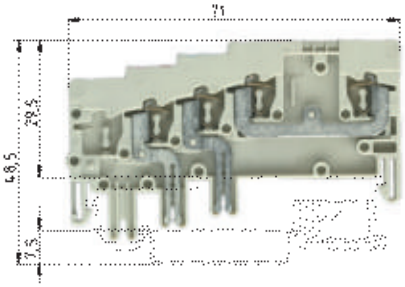

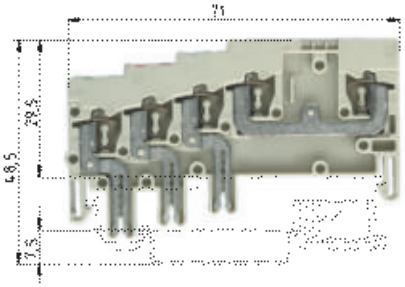

37.702.7453.0
* 65 V/1.5 kV/3

37.702.8453.0
* DC 24 V
same as picture, but with LED

37.702.7553.0
* 65 V/1.5 kV/3

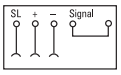

37.702.8553.0
* DC 24 V
same as picture, but with LED

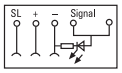

		WKF 1,5 KOI 3L...			WKF 1,5 KOI 3L/SL...		
		fine-stranded	solid	V	fine-stranded	solid	V
		0.13–1.5 mm²	0.13–1.5 mm²	*	0.13–1.5 mm²	0.13–1.5 mm²	*
EN 60 947-7-1/DIN VDE 0611 T1				A			A
UL ratings	field/factory wiring	No. 28-16 AWG		65 V	No. 28-16 AWG		65 V
CSA ratings				10			10
Width	Wire strip length	5 mm		10 mm	5 mm		10 mm
Approvals							

		Type	Part No.	Std. Pack	Type	Part No.	Std. Pack
Initiator block	gray	WKF 1,5 KOI 3L	37.702.7453.0	50			
Initiator block with LED (PNP)	gray	WKF 1,5 KOI 3L-PGE	37.702.8453.0	50			
Initiator block	gray				WKF 1,5 KOI 3L/SL	37.702.7553.0	50
Initiator block with LED (PNP)	black				WKF 1,5 KOI 3L/SL-PGE	37.702.8553.0	50
Supply block	black						
Supply block with LED	gray						
Actuator block	gray						
Actuator block with LED	gray						
Connection module for 9 blocks	black						
Connection module for 18 blocks	black						
Accessories							
1. Mounting rail 35, 7.5 mm high	L = 2 m	35x27x7,5 EN 60715	98.300.0000.0	1	35x27x7,5 EN 60715	98.300.0000.0	1
Mounting rail 35, 15 mm high	L = 2 m	35x24x15 EN 60715	98.360.0000.0	1	35x24x15 EN 60715	98.360.0000.0	1
2. End clamp TS 35, with screw	8 mm wide	9708/2 S35	Z5.522.8553.0	100	9708/2 S35	Z5.522.8553.0	100
End clamp TS 35, screwless	8 mm wide	WEF 1/35	Z5.523.9353.0	100	WEF 1/35	Z5.523.9353.0	100
3. End plate							
4. Partition plate							
5. Cross connector	2 pole						
insulated	3 pole						
	4 pole						
	5 pole						
	6 pole						
	7 pole						
	8 pole						
	9 pole						
	10 pole						
6. Wire entry guide	0.13–0.2 mm²	LEL 1,5/1 WEISS	05.562.2453.0	100	LEL 1,5/1 WEISS	05.562.2453.0	100
	0.25–0.5 mm²	LEL 1,5/2 GRAU	05.562.2553.0	100	LEL 1,5/2 GRAU	05.562.2553.0	100
	0.75–1.0 mm²	LEL 1,5/3 SCHWARZ	05.562.2653.0	100	LEL 1,5/3 SCHWARZ	05.562.2653.0	100
7. Cover for connection module							
8. Screwdriver, uninsulated		DIN 5264 B 0,6x3,5	06.502.4000.0	5	DIN 5264 B 0,6x3,5	06.502.4000.0	5
Marking accessories see page 77–81							

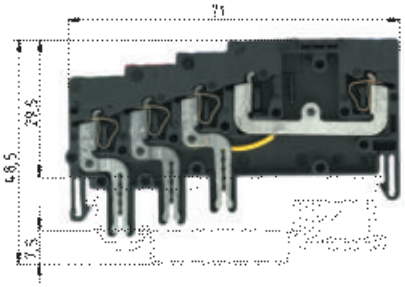

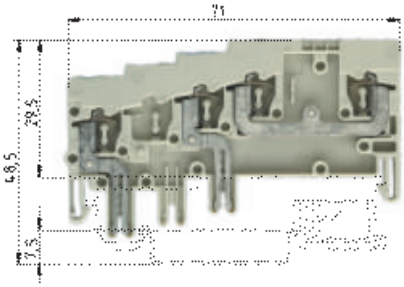

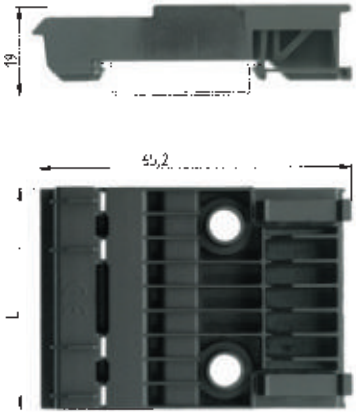

37.702.7753.0
* 65 V/1.5 kV/3

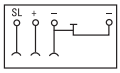

37.702.8753.0
* DC 24 V
same as picture, but with LED

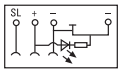

37.702.7653.0
* 65 V/1.5 kV/3

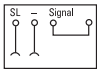

37.702.8653.0
* DC 24 V
same as picture, but with LED

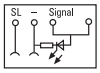

WKF 1,5 KOE...

fine-stranded	solid	V	A
0.13–1.5 mm²	0.13–1.5 mm²	*	10
No. 28-16 AWG		65 V	10

5 mm — 10 mm

WKF 1,5 KOA 2L...

fine-stranded	solid	V	A
0.13–1.5 mm²	0.13–1.5 mm²	*	10
No. 28-16 AWG		65 V	10

5 mm — 10 mm

VM WKF...

	V	A
	*	10
	65 V	10

9 pole module — L = 9 x 5 mm + 1.5 mm
18 pole module — L = 18 x 5 mm + 1.5 mm

Type	Part No.	Std. Pack	Type	Part No.	Std. Pack	Type	Part No.	Std. Pack
WKF 1,5 KOE	37.702.7753.0	50						
WKF 1,5 KOE-PGN	37.702.8753.0	50						
			WKF 1,5 KOA 2L	37.702.7653.0	50			
			WKF 1,5 KOA 2L/SL-PGE	37.702.8653.0	50			
						VM WKF K0..9	69.700.0953.0	10
						VM WKF K0..18	69.700.1853.0	5
35x27x7,5 EN 60715	98.300.0000.0	1	35x27x7,5 EN 60715	98.300.0000.0	1	35x27x7,5 EN 60715	98.300.0000.0	1
35x24x15 EN 60715	98.360.0000.0	1	35x24x15 EN 60715	98.360.0000.0	1	35x24x15 EN 60715	98.360.0000.0	1
9708/2 S35	Z5.522.8553.0	100	9708/2 S35	Z5.522.8553.0	100	9708/2 S35	Z5.522.8553.0	100
WEF 1/35	Z5.523.9353.0	100	WEF 1/35	Z5.523.9353.0	100	WEF 1/35	Z5.523.9353.0	100
LEL 1,5/1 WEISS	05.562.2453.0	100	LEL 1,5/1 WEISS	05.562.2453.0	100			
LEL 1,5/2 GRAU	05.562.2553.0	100	LEL 1,5/2 GRAU	05.562.2553.0	100			
LEL 1,5/3 SCHWARZ	05.562.2653.0	100	LEL 1,5/3 SCHWARZ	05.562.2653.0	100			
						AD VM-1,5/8 SCHWARZ	04.343.8053.0	10
DIN 5264 B 0,6x3,5	06.502.4000.0	5	DIN 5264 B 0,6x3,5	06.502.4000.0	5			

Motor connection block with tension spring connection

We have designed the motor connection block for a practice-oriented wiring of three-phase field devices. This is especially exhibited in the dimensioning of the rated values such as the high rated voltage of 800 V (EN 60947-7).

The connector can therefore also be used in 690 V networks, for example as connector for activating generators or AC motors up to 15 kW.

For the 4 wiring tiers of the motor connection block (3 feed-through potentials and one ground connection) the space requirements on the mounting rail are reduced to only 6 mm.

The motor connection block is a “space saver” providing you with many connection options.

mark

Clear marking of all clamping points

Benefits:

- Group marking in the center of the block is possible
- Clear assignment of wire to termination point on wiring
- Individual marking with the ***wiemarc*** marking system

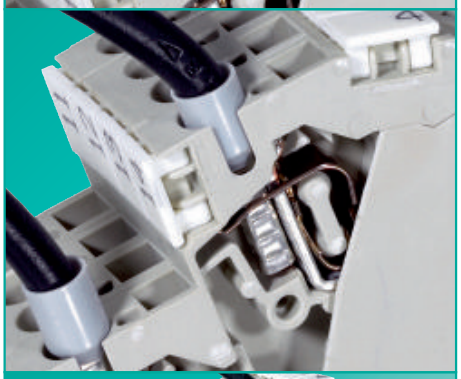

clamp

Flexible and universal connecting

Benefits:

- Connection of solid, stranded and fine-stranded wires between 0.13 and 6 mm^2
- Connection of fine-stranded wires with ferrule between 0.5 and 4 mm^2

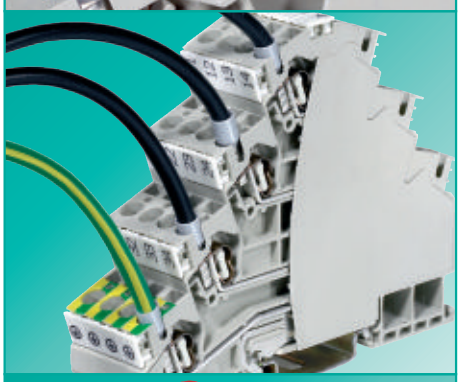

save

Use and save

Benefits:

- Snap on and the ground connection to the mounting rail is made
- Compact: 6 mm required on the mounting rail for one motor
- Design: closed insulated housing, no accessories

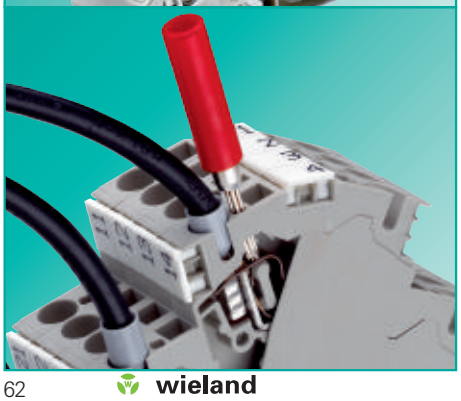

test

Measuring voltage with an integrated testing facility

Benefits:

- Testing at full wiring
- Testing directly at the current carrying bar

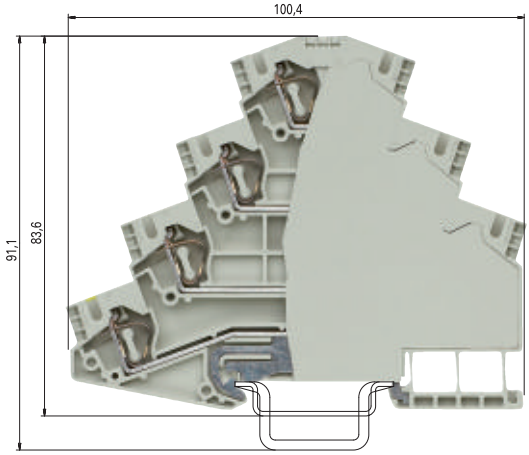

WKF 4 3D/SL

		fine-stranded	solid	V	A
		0.13–4 mm²	0.13–6 mm²	800 V/8 kV/3	28
EN 60 947-7-1/DIN VDE 0611 T1					
UL ratings	field/factory wiring	No. 28-10 AWG		600 V	30
CSA ratings					
Width	Wire strip length	6 mm			10 mm
Approvals					

		Type	Part No.	Std. Pack
Motor connection block	gray	WKF 4 3D/SL	56.704.8453.0	50
Accessories				
1. Mounting rail 35, 7.5 mm high	L = 2 m	35x27x7,5 EN 60715	98.300.0000.0	1
Mounting rail 35, 15 mm high	L = 2 m	35x24x15 EN 60715	98.360.0000.0	1
2. End clamp TS 35, with screw	8 mm wide	9708/2 S35	Z5.522.8553.0	100
End clamp TS 35, without screw	8 mm wide	WEF 1/35	Z5.523.9353.0	100
3. End plate	gray			
	blue			
4. Partition plate	gray			
	blue			
5. Cross connector	2 pole			
insulated	3 pole			
	4 pole			
	5 pole			
	6 pole			
	7 pole			
	8 pole			
	9 pole			
	10 pole			
6. Wire entry guide	0.13–0.2 mm²			
	0.25–0.5 mm²			
	0.75–1.0 mm²			
7. Cover with warning symbol over 4 blocks				
8. Test plug				
9. Screwdriver, uninsulated		DIN 5264 B 0,6x3,5	06.502.4000.0	5
Marking accessories see page 77–81				

DIN rail terminal blocks with tension spring connection

With our DIN rail terminal block system ***fasis*** MINI we focus on the application's size and flexibility. ***fasis*** MINI is a range of DIN rail terminal blocks in tension spring technology designed for installation in confined spaces.

The portfolio comprises ground blocks and feed-through blocks in various colors with 2 or 4 connections per potential.

The potential in the WKFM 2,5 terminal block series can be distributed, modified and extended quickly, flexibly and without problem by using cross connectors.

For installation on TS 35 and TS 15 mounting rails, on mounting boards or inside universal terminal boxes we provide various designs with latching foot, latching pin or screw flange.

Solutions for applications in confined spaces

- Space-saving miniature terminal blocks in many designs for installation inside universal terminal boxes, motors and applications with low space requirements.
- Easy wiring through user-friendly entry guides for screwdrivers from the top.
- Marking tags easily readable even with the wires connected.
- Individual planning and marking using ***wieplan*** and ***wiemarc.***

Application-related selection

- Miniature terminal blocks with latching foot for direct installation on the mounting board.
- Miniature terminal blocks with flange for direct screw fixation on the mounting board.
- Miniature terminal blocks for installation on TS 15 or TS 35 mounting rails.

Combined individually

- DIN rail terminal blocks of the ***fasis*** MINI series are available in 2 and 4 pole configurations.
- ***fasis*** MINI blocks can be chained individually even without mounting rails by using the integrated latching pins.
- The various potentials and terminal blocks are visually distinguished by various color variations.
- Individual marking using marking tags or customized printing of the terminal blocks.

Permanent electrical connection

- The tension spring system provides a dynamic clamping connection. Load-controlled and thermal cold flow properties of the connected wires are balanced.
- Maintenance-free and gas-tight electrical connection as specified by the approvals. Customized layouts can be created individually.
- Separation of electrical and mechanical functions.

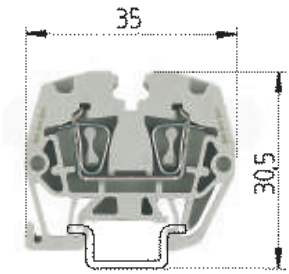

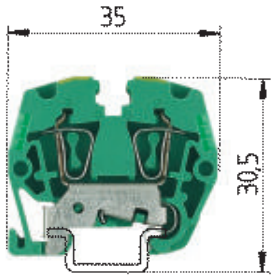

		WKMF 2,5/15			WKMF 2,5 SL/15		
0344 Ex II 2GD		fine-stranded	solid	V	fine-stranded	solid	V
Ex e II		0.13–2.5 mm²	0.13–2.5 mm²	500 V/6 kV/3	0.13–2.5 mm²	0.13–2.5 mm²	500 V/6kV/3[4]
EN 60 947-7-1		No. 26-12	AWG	600 V	No. 26-12	AWG	600 V
UL ratings	field/factory wiring	No. 26-12	AWG	300 V	No. 26-12	AWG	300 V
CSA ratings		0.5–2.5 mm²	0.5–2.5 mm²	275 V*)	0.5–2.5 mm²	0.5–2.5 mm²	*)
KEMA 03 ATEX 2071 U[1]	EN 60079-0/EN 60079-7			19/20[2]			
Width	Wire strip length	5 mm		10 mm	5 mm		10 mm
Approvals		ATEX cULus CSA			ATEX cULus CSA		

			Type	Part No.	Std. Pack	Type	Part No.	Std. Pack
Feed-through block		gray	WKMF 2,5/15	55.703.0053.0	100			
Feed-through block		blue	WKMF 2,5/15	55.703.0053.6	100			
Ground block		green/yellow				WKMF 2,5 SL/15	55.703.9053.0	100
Accessories								
1. Mounting rail 15, 5.5 mm high		L = 2 m	9021/15x5,5 EN 50045	98.090.0015.0	10	9021/15x5,5 EN 50045	98.090.0015.0	10
2. End clamp TS 15, metal		7,5 mm wide	9222	Z5.522.5010.0	100	9222	Z5.522.5010.0	100
End clamp TS 15, polyamide		7,5 mm wide	9208 S 15	Z5.522.7553.0	100	9208 S 15	Z5.522.7553.0	100
3. End plate	1.5 mm wide	gray	APMF 2,5 /15	07.312.5953.0	10	APMF 2,5 /15	07.312.5953.0	10
	1.5 mm wide	blue						
	1.5 mm wide	green						
4. Partition plate	1.5 mm wide	gray						
	1.5 mm wide	blue						
5. Cross connector		2 pole	IVB WKMF 2,5–2	Z7.260.0229.0	10			
insulated		3 pole	IVB WKMF 2,5–3	Z7.260.0329.0	10			
		4 pole	IVB WKMF 2,5–4	Z7.260.0429.0	10			
		5 pole	IVB WKMF 2,5–5	Z7.260.0529.0	10			
		6 pole	IVB WKMF 2,5–6	Z7.260.0629.0	10			
		7 pole	IVB WKMF 2,5–7	Z7.260.0729.0	10			
		8 pole	IVB WKMF 2,5–8	Z7.260.0829.0	10			
		9 pole	IVB WKMF 2,5–9	Z7.260.0929.0	10			
		10 pole	IVB WKMF 2,5–10	Z7.260.1029.0	10			
		50 pole	IVB WKMF 2,5 M50	Z7.260.0029.0	10			
6. Wire entry guide		0.13–0.2 mm²						
		0.25–0.5 mm²						
		0.75–1.0 mm²						
7. Cover with warning symbol for 4 terminals								
8. Screwdriver, uninsulated			DIN 5264 B 0,6x3,5	06.502.4000.0	5	DIN 5264 B 0,6x3,5	06.502.4000.0	5
Screwdriver, uninsulated, MINI			DIN 5264 B 0,6x3,5 M	06.502.5000.0	10	DIN 5264 B 0,6x3,5 M	06.502.5000.0	10
Marking accessories see page 77–81								

*) For maintaining the proper isolation distances, the open side of feed-through or ground blocks as well as both sides of a jumper are to be covered by partitions.
1) Please note the mounting instructions in AT catalog.
2) with/without jumper
3) For the current carrying capability of the mounting rail see AT catalog section ***facts*** & DATA.
4) Ratings to adjacent feed-through blocks of the same series and size

Mini terminal blocks with tension spring connection

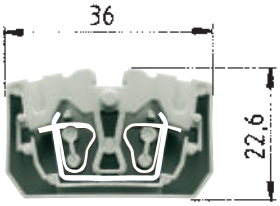

WKF 2,5/M/F

WKF 2,5/M

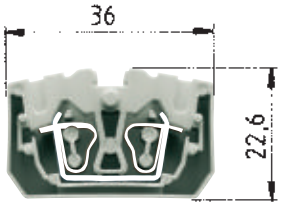

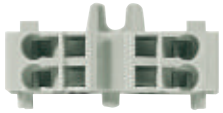

WKF 2,5/MD/F

WKF 2,5/MD

		WKF 2,5/M with flange				**WKF 2,5/MD with flange**			
		fine-stranded	solid	V	A	fine-stranded	solid	V	A
EN 60 947-7-1:2002		0.13–2.5 mm²	0.13–4 mm²	800 V	24	0.13–2.5 mm²	0.13–4 mm²	800 V	24
UL ratings	field/factory wiring								
CSA ratings									
Width	Wire strip length	5 mm			11 mm	10 mm			11 mm
Approvals		VDE UL CSA				VDE UL CSA			

		Type	Part No.	Std. Pack	Type	Part No.	Std. Pack
Feed-through block unmarked	gray	WKF 2,5/M	37.703.0553.0	100			
Feed-through block unmarked	blue	WKF 2,5/M BLAU	37.703.0553.6	100			
Feed-through block unmarked	orange	WKF 2,5/M ORANGE	37.703.0553.9	100			
Feed-through block with flange	gray	WKF 2,5/M/F	39.703.0153.0	100			
Feed-through block with flange	blue	WKF 2,5/M/F BLAU	39.703.0153.6	100			
Feed-through block with flange	orange	WKF 2,5/M/F ORANGE	39.703.0153.9	100			
Duo feed-through block unmarked	gray				WKF 2,5/MD	37.703.1053.0	100
Duo feed-through block unmarked	blue				WKF 2,5/MD BLAU	37.703.1053.6	100
Duo feed-through block unmarked	orange				WKF 2,5/MD ORANGE	37.703.1053.9	100
Duo feed-through block with flange	gray				WKF 2,5/MD/F	39.703.0253.0	100
Duo feed-through block with flange	blue				WKF 2,5/MD/F BLAU	39.703.0253.6	100
Duo feed-through block with flange	orange				WKF 2,5/MD/F ORANGE	39.703.0253.9	100
Accessories							
1. End plate with flange on the right	gray	APF 2,5/M.../F/R	07.312.3153.0	10	APF 2,5/M.../F/R	07.312.3153.0	10
End plate with flange on the right	blue	APF 2,5/M.../F/R BLAU	07.312.3153.6	10	APF 2,5/M.../F/R BLAU	07.312.3153.6	10
End plate with flange on the right	orange	APF 2,5/M.../F/R ORANGE	07.312.3153.9	10	APF 2,5/M.../F/R ORANGE	07.312.3153.9	10
2. Wire entry guide	0.13–0.2 mm²	LEL 2,5/1 WEISS	05.561.6553.0	100	LEL 2,5/1 WEISS	05.561.6553.0	100
	0.25–0.5 mm²	LEL 2,5/2 GRAU	05.561.6653.0	100	LEL 2,5/2 GRAU	05.561.6653.0	100
	0.75–1.0 mm²	LEL 2,5/3 SCHWARZ	05.561.6753.0	100	LEL 2,5/3 SCHWARZ	05.561.6753.0	100
3. Cross connector, insulated	2 pole		05.902.3500.0	10		05.902.3500.0	10
4. Marking strip, unmarked	(4 x 22 pcs.)		04.244.0053.0	5		04.244.0053.0	5
marked	(1–11)		04.844.2053.0	5		04.844.2053.0	5
marked	(12–55)		04.844.2153.0	5		04.844.2153.0	5
marked	(56–99)		04.844.2253.0	5		04.844.2253.0	5
5. Screwdriver, uninsulated		DIN 5264 B 0,6 x 3,5	06.502.4000.0	5	DIN 5264 B 0,6 x 3,5	06.502.4000.0	5
Marking accessories see page 77–81							

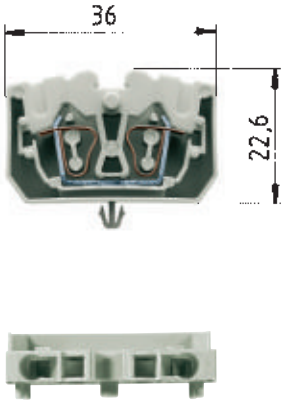

Mounting hole: Ø 3,5 mm
Plate thickness: 0,6 – 1,2 mm

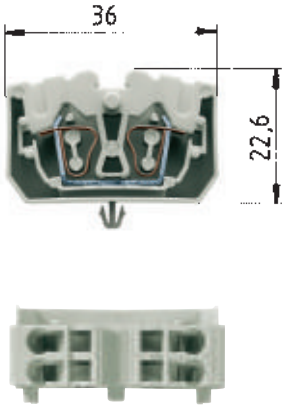

Mounting hole: Ø 3,5 mm
Plate thickness: 0,6 – 1,2 mm

		WKF 2,5/M/R with mounting foot				WKF 2,5/MD/R with mounting foot			
		fine-stranded	solid	V	A	fine-stranded	solid	V	A
		0.13 – 2.5 mm²	0.13 – 4 mm²	800 V	24	0.13 – 2.5 mm²	0.13 – 4 mm²	800 V	24
EN 60 947-7-1:2002									
UL ratings	field/factory wiring								
CSA ratings									
Width	Wire strip length	5 mm			11 mm	10 mm			11 mm
Approvals									

		Type	Part No.	Std. Pack	Type	Part No.	Std. Pack
Feed-through block unmarked	gray	WKF 2,5/M/R	38.703.0553.0	100			
Feed-through block unmarked	blue	WKF 2,5/M/R BLAU	38.703.0553.6	100			
Feed-through block unmarked	orange	WKF 2,5/M/R ORANGE	38.703.0553.9	100			
Duo feed-through block unmarked	gray				WKF 2,5/MD/R	38.703.1053.0	100
Duo feed-through block unmarked	blue				WKF 2,5/MD/R BLAU	38.703.1053.6	100
Duo feed-through block unmarked	orange				WKF 2,5/MD/R ORANGE	38.703.1053.9	100
Accessories							
1. End plate	gray	APF 2,5/M...	07.312.2953.0	10	APF 2,5/M...	07.312.2953.0	10
End plate	blue	APF 2,5/M... BLAU	07.312.2953.6	10	APF 2,5/M... BLAU	07.312.2953.6	10
End plate	orange	APF 2,5/M... ORANGE	07.312.2953.9	10	APF 2,5/M... ORANGE	07.312.2953.9	10
2. Wire entry guide	0.13 – 0.2 mm²	LEL 2,5/1 WEISS	05.561.6553.0	100	LEL 2,5/1 WEISS	05.561.6553.0	100
	0.25 – 0.5 mm²	LEL 2,5/2 GRAU	05.561.6653.0	100	LEL 2,5/2 GRAU	05.561.6653.0	100
	0.75 – 1.0 mm²	LEL 2,5/3 SCHWARZ	05.561.6753.0	100	LEL 2,5/3 SCHWARZ	05.561.6753.0	100
3. Cross connector, insulated	2 pole		05.902.3500.0	10		05.902.3500.0	10
4. Marking strip, unmarked	(4 x 22 pcs.)		04.244.0053.0	5		04.244.0053.0	5
marked	(1 – 11)		04.844.2053.0	5		04.844.2053.0	5
marked	(12 – 55)		04.844.2153.0	5		04.844.2153.0	5
marked	(56 – 99)		04.844.2253.0	5		04.844.2253.0	5
5. Screwdriver, uninsulated		DIN 5264 B 0,6 x 3,5	06.502.4000.0	5	DIN 5264 B 0,6 x 3,5	06.502.4000.0	5

Mini terminal blocks with tension spring connection

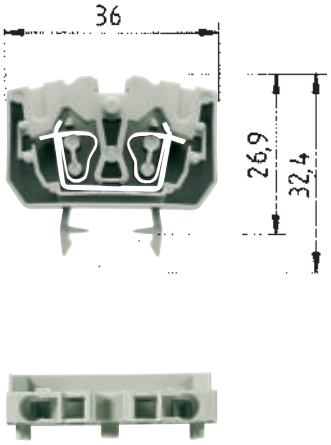

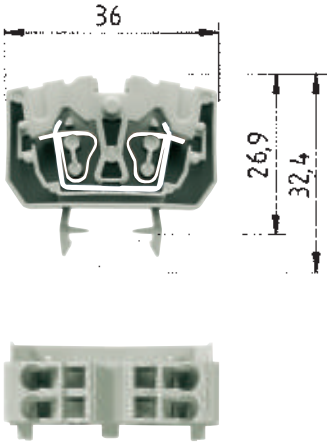

		WKF 2,5/M/15				WKF 2,5/MD/15			
		fine-stranded	solid	V	A	fine-stranded	solid	V	A
		0.13–2.5 mm²	0.13–4 mm²	800 V	24	0.13–2.5 mm²	0.13–4 mm²	800 V	24
EN 60 947-7-1:2002									
UL ratings	field/factory wiring								
CSA ratings									
Width	Wire strip length	5 mm			11 mm	10 mm			11 mm
Approvals									

			Type	Part No.	Std. Pack	Type	Part No.	Std. Pack
Feed-through block unmarked		gray	WKF 2,5/M/15	55.703.0553.0	100			
Feed-through block unmarked		blue	WKF 2,5/M/15 BLAU	55.703.0553.6	100			
Feed-through block unmarked		orange	WKF 2,5/M/15 ORANGE	55.703.0553.9	100			
Feed-through block unmarked		green	WKF 2,5/M/15 GRÜN	55.703.0553.7	100			
Duo feed-through block unmarked		gray				WKF 2,5/MD/15	55.703.1053.0	100
Duo feed-through block unmarked		blue				WKF 2,5/MD/15 BLAU	55.703.1053.6	100
Duo feed-through block unmarked		orange				WKF 2,5/MD/15 ORANGE	55.703.1053.9	100
Duo feed-through block unmarked		green				WKF 2,5/MD/15 GRÜN	55.703.1053.7	100
Accessories								
1. Mounting rail 15,	5.5 mm high	L = 2 m	9021/15 x 5,5 EN 50045	98.090.0015.0	10	9021/15 x 5,5 EN 50045	98.090.0015.0	10
Mounting rail 35,	7.5 mm high	L = 2 m						
Mounting rail 35,	15 mm high	L = 2 m						
Mounting rail 35,	15 mm high	L = 2 m						
2. End clamp TS 15			9208 S15	Z5.522.7553.0	100	9208 S15	Z5.522.7553.0	100
End clamp TS 15, without screw								
3. End plate		gray	APF 2,5/M...	07.312.2953.0	10	APF 2,5/M...	07.312.2953.0	10
		blue	APF 2,5/M... BLAU	07.312.2953.6	10	APF 2,5/M... BLAU	07.312.2953.6	10
		orange	APF 2,5/M... ORANGE	07.312.2953.9	10	APF 2,5/M... ORANGE	07.312.2953.9	10
4. Wire entry guide		0.13–0.2 mm²	LEL 2,5/1 WEISS	05.561.6553.0	100	LEL 2,5/1 WEISS	05.561.6553.0	100
		0.25–0.5 mm²	LEL 2,5/2 GRAU	05.561.6653.0	100	LEL 2,5/2 GRAU	05.561.6653.0	100
		0.75–1.0 mm²	LEL 2,5/3 SCHWARZ	05.561.6753.0	100	LEL 2,5/3 SCHWARZ	05.561.6753.0	100
5. Cross connector, insulated		2 pole		05.902.3500.0	10		05.902.3500.0	10
6. Marking strip,	unmarked	(4 x 22 pcs.)		04.244.0053.0	5		04.244.0053.0	5
	marked	(1–11)		04.844.2053.0	5		04.844.2053.0	5
	marked	(12–55)		04.844.2153.0	5		04.844.2153.0	5
	marked	(56–99)		04.844.2253.0	5		04.844.2253.0	5
	yellow, unmarked			04.244.0053.8	5		04.244.0053.8	5
7. Screwdriver, uninsulated			DIN 5264 B 0,6 x 3,5	06.502.4000.0	5	DIN 5264 B 0,6 x 3,5	06.502.4000.0	5
Marking accessories see page 77–81								

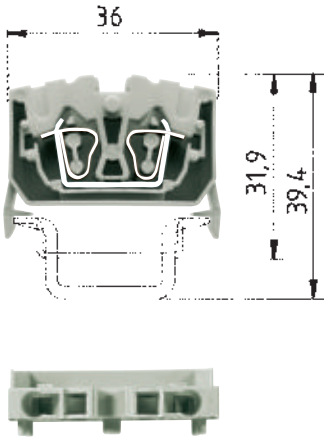

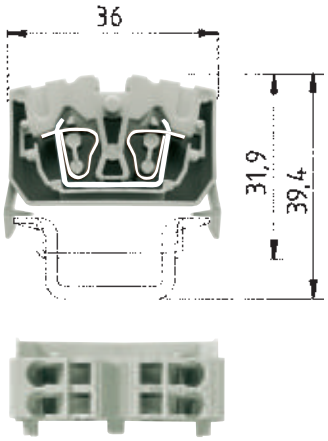

		WKF 2,5/M/35			WKF 2,5/MD/35		
		fine-stranded	solid	V	fine-stranded	solid	V
		0.13–2.5 mm²	0.13–4 mm²	800 V	0.13–2.5 mm²	0.13–4 mm²	800 V
EN 60 947-7-1:2002				A			A
UL ratings	field/factory wiring						
CSA ratings							
Width	Wire strip length	5 mm		11 mm	10 mm		11 mm
Approvals							

			Type	Part No.	Std. Pack	Type	Part No.	Std. Pack
Feed-through block unmarked		gray	WKF 2,5/M/35	56.703.0553.0	100			
Feed-through block unmarked		blue	WKF 2,5/M/35 BLAU	56.703.0553.6	100			
Feed-through block unmarked		orange	WKF 2,5/M/35 ORANGE	56.703.0553.9	100			
Feed-through block unmarked		green	WKF 2,5/M/35 GRÜN	56.703.0553.7	100			
Duo feed-through block unmarked		gray				WKF 2,5/MD/35	56.703.1053.0	100
Duo feed-through block unmarked		blue				WKF 2,5/MD/35 BLAU	56.703.1053.6	100
Duo feed-through block unmarked		orange				WKF 2,5/MD/35 ORANGE	56.703.1053.9	100
Duo feed-through block unmarked		green				WKF 2,5/MD/35 GRÜN	56.703.1053.7	100
Accessories								
1. Mounting rail 15,	5.5 mm high	L = 2 m						
Mounting rail 35,	7.5 mm high	L = 2 m	35x27x7,5 EN 60715	98.300.0000.0	1	35x27x7,5 EN 60715	98.300.0000.0	1
Mounting rail 35,	15 mm high	L = 2 m	35x24x15 EN 60715	98.360.0000.0	1	35x24x15 EN 60715	98.360.0000.0	1
Mounting rail 35,	15 mm high	L = 2 m	35x27x15	98.370.0000.0	1	35x27x15	98.370.0000.0	1
2. End clamp TS 15								
End clamp TS 15, without screw			WEF 1/35	Z5.523.9353.0	100	WEF 1/35	Z5.523.9353.0	100
3. End plate		gray	APF 2,5/M... GRAU	07.312.2953.0	10	APF 2,5/M... GRAU	07.312.2953.0	10
		blue	APF 2,5/M... BLAU	07.312.2953.6	10	APF 2,5/M... BLAU	07.312.2953.6	10
		orange	APF 2,5/M... ORANGE	07.312.2953.9	10	APF 2,5/M... ORANGE	07.312.2953.9	10
4. Wire entry guide		0.13–0.2 mm²	LEL 2,5/1 WEISS	05.561.6553.0	100	LEL 2,5/1 WEISS	05.561.6553.0	100
		0.25–0.5 mm²	LEL 2,5/2 GRAU	05.561.6653.0	100	LEL 2,5/2 GRAU	05.561.6653.0	100
		0.75–1.0 mm²	LEL 2,5/3 SCHWARZ	05.561.6753.0	100	LEL 2,5/3 SCHWARZ	05.561.6753.0	100
5. Cross connector, insulated		2 pole		05.902.3500.0	10		05.902.3500.0	10
6. Marking strip,	unmarked	(4 x 22 pcs.)		04.244.0053.0	5		04.244.0053.0	5
	marked	(1–11)		04.844.2053.0	5		04.844.2053.0	5
	marked	(12–55)		04.844.2153.0	5		04.844.2153.0	5
	marked	(56–99)		04.844.2253.0	5		04.844.2253.0	5
	yellow, unmarked			04.244.0053.8	5		04.244.0053.8	5
7. Screwdriver, uninsulated			DIN 5264 B 0,6 x 3,5	06.502.4000.0	5	DIN 5264 B 0,6 x 3,5	06.502.4000.0	5

DIN rail terminal blocks with tension spring connection

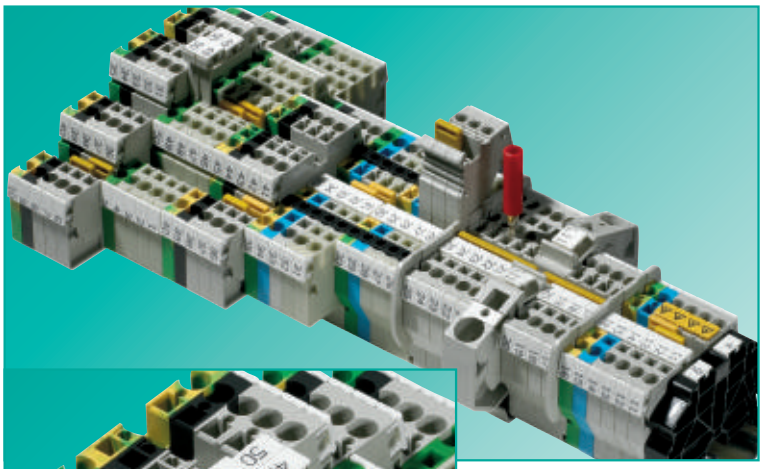

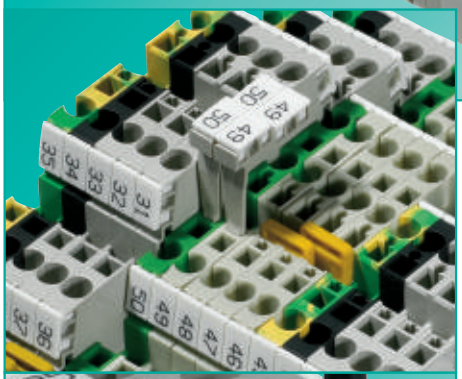

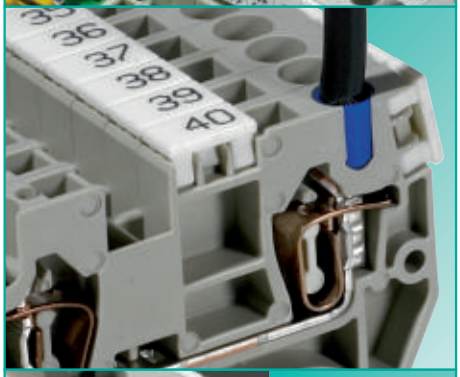

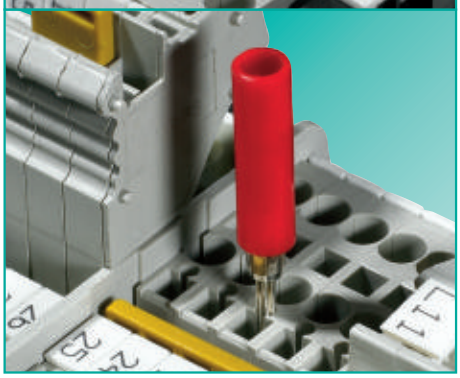

With its ***fasis*** WKFN series Wieland Electric offers you a complete range of DIN rail terminal blocks with tension spring technology.

The portfolio comprises feed-through and ground blocks with 2, 3 or 4 termination points, two-tier and three-tier blocks, single-tier and two-tier knife-edge disconnect blocks as well as fuse blocks. There are also function blocks with application-specific diode circuits available.

fasis WKFN has been designed for use in machine and system engineering as well as for hazardous areas.

Technical information as per EN 60947-7:

Rated cross section:	1.5 – 35 mm²
Rated current:	17.5 A – 125 A
Rated voltage:	800/500 V
Wire range:	0.08 – 35 mm²

mark

Clearly mark all clamping points

Benefits:

- Marking tags easily readable even with the wires connected.
- Clear assignment of wire to termination point for easy wiring
- Simplified troubleshooting for maintenance operations
- Individual marking with the ***wiemarc*** marking system

clamp

Flexible and universal connection

Benefits:

- Clamping body as per gauge plug EN 60947-7
- Connection of solid, fine-stranded and stranded wires up to a conductor size larger than the rated cross section for example WKFN 2,5: 0.13 to 4 mm²
- Connection of fine-stranded wires with ferrules and insulated sleeve up to the rated cross section for example WKFN 2,5: 0.5 to 2.5 mm²

jump

Jumpering the terminal blocks on two channels

Benefits:

- Flexible potential distribution through staggered and chained arrangement of the cross connectors.
- Cost reduction in stockkeeping due to standardized variations (preferred number of poles)
- Potential distribution with supply blocks up to 76 A and standard connectors on feed-through terminal blocks.

test

Measuring voltage through integrated testing facility

Benefits:

- Testing when fully wired (including cross connector)
- Testing directly at the current-carrying bar
- Function test with modular test adapter through test point in the jumpering channel

Accessories for DIN rail terminal blocks

The Wieland labeling system

Customer specific marking of DIN rail terminal blocks is possible with Wieland, both through pre-printed custom tags, and also with the ***wieplot*** Wieland plotter system. Using the easy-to-operate ***wiemarc*** software and the Wieland plotter you are able to mark your terminal strips with the maximum level of flexibility. Using the optional add-on engraving unit, multilayer plastic boards can be marked in no time at all.

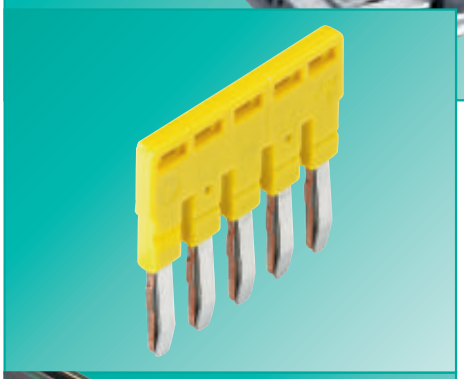

Power and potential distribution

fasis WKFN is equipped throughout the product line with a dual-channel jumpering system. Distribute the potential using standard plug-in jumpers from the main supply terminal to other DIN rail terminal blocks of type WKFN 2.5 and WKFN 4. You can field-cut the number of poles you require from a multi-pole jumper strip yourself.

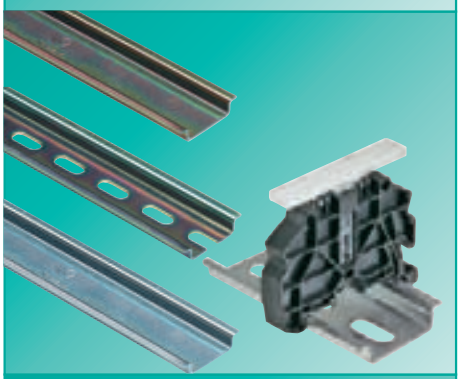

Assembly, securing and marking

Our range of accessories includes a wide variety of mounting rails, and end clamps for securely holding DIN rail terminal blocks together, with the appropriate marking capability for the entire terminal assembly.

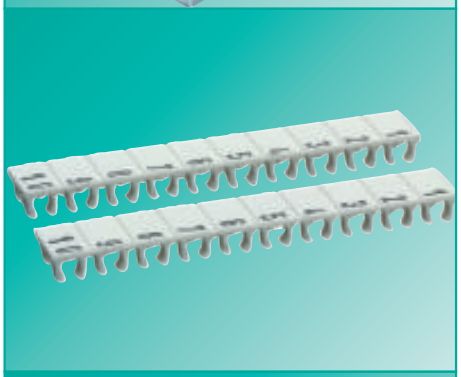

Marking materials for DIN rail terminal blocks

You will find the appropriate marking tags for your DIN rail terminal blocks here, for smudge-proof and easy-to-read marking of termination points.

Tools

Regardless of whether you wish to strip or crimp a wire, or connect it to a termination point, Wieland offers you the appropriate tool.

Accessories for DIN rail terminal blocks

Cross connector for feed-through blocks

Notching tool for cross connectors

Test plug with spring clamp connection

for WKF/WKC terminal blocks

PSWKC/F

solid	fine-stranded	V	A
0.13 – 1.5 mm²	0.13 – 1.5 mm²	400 V	13,5
*5 mm/6 mm			8 mm

Type	Part No.	Std. Pack
1.5 mm², 4 mm wide		
IVB WKF 1,5-2	Z7.260.0227.0	10
IVB WKF 1,5-3	Z7.268.0327.0	10
IVB WKF 1,5-4	Z7.268.0427.0	10
IVB WKF 1,5-5	Z7.268.0527.0	10
IVB WKF 1,5-10	Z7.268.1027.0	10
IVB WKF 1,5-20	Z7.268.2027.0	10
2.5 mm², 5 mm wide		
IVB WKF 2,5-2	Z7.280.6227.0	10
IVB WKF 2,5-3	Z7.280.6327.0	10
IVB WKF 2,5-4	Z7.280.6427.0	10
IVB WKF 2,5-5	Z7.280.6527.0	10
IVB WKF 2,5-6	Z7.280.6627.0	10
IVB WKF 2,5-7	Z7.280.6727.0	20
IVB WKF 2,5-8	Z7.280.6827.0	20
IVB WKF 2,5-9	Z7.280.6927.0	20
IVB WKF 2,5-10	Z7.280.7027.0	20
IVB WKF-V	Z7.261.1127.0	10
4 mm², 6 mm wide		
IVB WKF 4-2	Z7.261.1227.0	10
IVB WKF 4-3	Z7.261.1327.0	10
IVB WKF 4-4	Z7.261.1427.0	10
IVB WKF 4-5	Z7.261.1527.0	10
IVB WKF 4-6	Z7.261.1627.0	10
IVB WKF 4-7	Z7.261.1727.0	10
IVB WKF 4-8	Z7.261.1827.0	10
IVB WKF 4-9	Z7.261.1927.0	10
IVB WKF 4-10	Z7.261.2027.0	10
6 mm², 8 mm wide		
IVB WKFN 6-2	Z7.282.5227.0	10
IVB WKFN 6-5	Z7.282.5527.0	10
10 mm², 10 mm wide		
IVB WKF 10-2	Z7.283.8227.0	10
16 mm², 12 mm wide		
IVB WKF 16-2	Z7.284.4227.0	10
IVB WKF 16R10-2	Z7.284.4327.0	10
35 mm², 16 mm wide		
IVB WKF 35-2	Z7.285.6227.0	10
IVB WKF 35R10-2	Z7.285.6427.0	10
IVB WKF 35R16-2	Z7.285.6527.0	10

Type	Part No.	Std. Pack
1.5 mm², 4 mm wide		
AKW /A	95.300.0500.0	1
2.5 mm², 5 mm wide		
AKW /A	95.300.0500.0	1
Jumping cross connectors		
3 pole 1-3	99.013.9999.9	10
4 pole 1-4	99.014.9999.9	10
5 pole 1-5	99.015.9999.9	10
5 pole 1 to 3 to 5	99.031.9999.9	10
7 pole 1 to 3, 5 and 7	99.032.9999.9	10
9 pole; 1 to 3, 5, 7 and 9	99.033.9999.9	10
11 pole; 1 to 3, 5, 7, 9 u. 11	99.034.9999.9	10
Additional combinations upon request		10
4 mm², 6 mm wide		
AKW /A	95.300.0500.0	1

Please note the instructions for jumping cross connectors on page 31!

You can cut a 10-pole jumper strip down into two 5-pole jumper strips however, an end plate or partition plate must then be installed at the point of separation.

Type	Part No.	Std. Pack
2.5 mm², 5 mm wide		
Test plug PSWKC/F	Z1.299.9753.0	10
Blind piece	01.299.9753.0	10
End plate ZP/AP PS	07.312.6053.0	10
4 mm², 6 mm wide		
Test plug PSWKC/F	Z1.299.9753.0	10
Blind piece	01.299.9753.0	10
End plate ZP/AP PS	07.312.6053.0	10

* For 6 mm spacings a ZP/AP PS is snapped on behind each test plug or blind piece.

Cover with warning symbol over 4 blocks

Wire entry guides

for conductors with cross sections smaller than 1 mm²

Screwdrivers as operating tools

Type	Part No.	Std. Pack	Type	Part No.	Std. Pack	Type	Part No.	Std. Pack
1.5 mm², 4 mm wide			**1.5 mm², 4 mm wide**			**1.5 mm², 4 mm wide**		
ADF 1,5/5 GELB	04.343.6953.8	10	LEL 1,5/1 WEISS	05.564.4253.0	10	Uninsulated, long and straight		
			for 0.13–0.2 mm² wires			DIN 5264 B 0,4x2,5	06.502.4300.0	10
			LEL 1,5/2 GRAU	05.564.4353.0	10			
			for 0.25–0.5 mm² wires					
2.5 mm², 5 mm wide			**2.5 mm², 5 mm wide**			**2.5 mm², 5 mm wide**		
ADFN 2,5/4 GELB	04.343.8353.8	10	LELN 2,5/1 WEISS	05.564.3755.0	100	Uninsulated, long and straight		
			for 0.13–0.2 mm² wires			DIN 5264 B 0,6x3,5	06.502.4000.0	10
			LELN 2,5/1 GRAU	05.564.3855.0	100	Uninsulated, short and straight		
			for 0.25–0.5 mm² wires			DIN 5264 B 0,6x3,5 M	06.502.5000.0	10
			LELN 2,5/1 SCHWARZ	05.564.3955.0	100	Uninsulated, long and angled		
			for 0.75–1.0 mm² wires			DIN 5264 B 0,6x3,5 W	05.502.4100.0	10
						Uninsulated, short and angled		
						DIN 5264 B 0,6x3,5 MW	05.502.4000.0	10
4 mm², 6 mm wide			**4 mm², 6 mm wide**			**4 mm², 6 mm wide**		
ADF 4/4 GELB	04.343.6153.8	10	LEL 4/1 WEISS	05.561.8553.0	100	Uninsulated, long and straight		
			for 0.13–0.2 mm² wires			DIN 5264 B 0,6x3,5	06.502.4000.0	10
			LEL 4/2 GRAU	05.561.8653.0	100	Uninsulated, short and straight		
			for 0.25–0.5 mm² wires			DIN 5264 B 0,6x3,5 M	06.502.5000.0	10
			LEL 4/3 SCHWARZ	05.561.8753.0	100	Uninsulated, long and angled		
			for 0.75–1.0 mm² wires			DIN 5264 B 0,6x3,5 W	05.502.4100.0	10
						Uninsulated, short and angled		
						DIN 5264 B 0,6x3,5 MW	05.502.4000.0	10
6 mm², 8 mm wide						**6 mm², 8 mm wide**		
ADF 6/4 GELB	04.343.6253.8	10				DIN 5264 B 0,6x4	06.502.4100.0	5
10 mm², 10 mm wide						**10 mm², 10 mm wide**		
ADF 10/4 GELB	04.343.6453.8	10				DIN 5264 B 0,6x4	06.502.4100.0	5
16 mm², 12 mm wide						**16 mm², 12 mm wide**		
ADF 16/4 GELB	04.343.6653.8	10				DIN 5264 B 1x5,5	06.502.4200.0	5
35 mm², 16 mm wide						**35 mm², 16 mm wide**		
ADF 35/5 GELB	04.343.9253.8	10				DIN 5264 B 1x5,5	06.502.4200.0	5

Mounting rails and end clamps for DIN rail terminal blocks

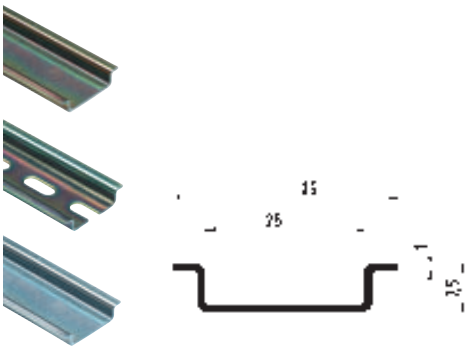

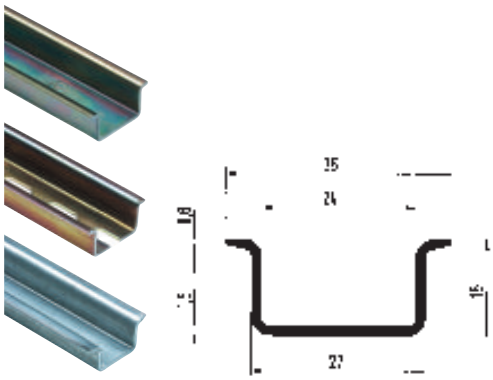

			Mounting rail 35 x 7,5 according to DIN EN 60715			Mounting rail 35 x 15 according to DIN EN 60715		
			Type	Part No.	Std. Pack	Type	Part No.	Std. Pack
Mounting rail								
1. Steel, galv. zinc-plated and dichromated,	unslotted	L = 2 m	35 x 27 x 7,5 EN 60715	98.300.0000.0	1	35 x 27 x 15 EN 60715	98.370.0000.0	1
Steel, galv. zinc-plated and dichromated,	slotted	L = 2 m	35 x 27 x 7,5 EN 60715 gelocht	98.300.1000.0	1	35 x 27 x 15 EN 60715	98.370.1000.0	1
2. Steel, unplated	unslotted	L = 2 m	35 x 27 x 7,5 EN 60715 blank	98.300.0010.0	1			
Steel, unplated	slotted	L = 2 m						
3. Steel, hot-galvanized	unslotted	L = 2 m						
Steel, hot-galvanized	slotted	L = 2 m						
4. E copper	unslotted	L = 2 m						
E copper	slotted	L = 2 m						
End clamp								
5. End clamp for TS 35, with screw		8 mm wide						
6. End clamp for TS 35, with screw		8/17,5 mm wide						
with marking facility								
for block assemblies								
7. End clamp for TS 35, screwless		5 mm wide						
End clamp for TS 35, screwless		8 mm wide						
8. End clamp for TS 35, screwless		8/17,5 mm wide						
with marking facility								
for block assemblies								
9. Marking tag with carrier		wide						
10. Marking card in perforated sheets		wide						
(1 sheet = 100 single tags)								
11. Marking tag with carrier		small						
12. Marking card in perforated sheets		small						
13. End clamp 8 mm and marking set		small						

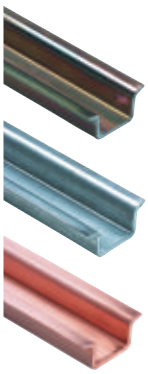

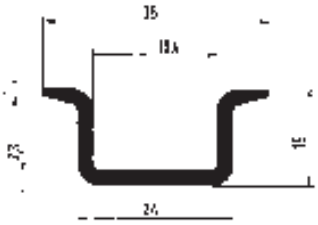

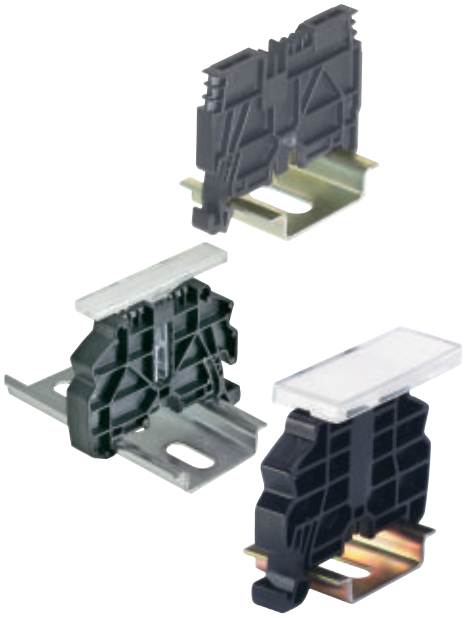

Mounting rail 35 x 15
according to DIN EN 60715

Type	Part No.	Std. Pack
35 x 27 x 15 EN 60715	98.360.0000.0	1
35 x 27 x 15 EN 60715 ZN	98.360.0004.0	1
35 x 27 x 15 EN 60715 CU	98.380.0000.0	10

End clamp for TS 35
screw mount

Type	Part No.	Std. Pack
9708/2 S 35	Z5.522.8553.0	100
9708/2 BS/35	69.920.0553.0	100
	04.019.0289.0	10

End clamp for TS 35
screwless mount

Type	Part No.	Std. Pack
WEF 2/35	Z5.523.9453.0	100
WEF 1/35	Z5.523.9353.0	100
WEF 1 BS/35	69.920.1053.0	100
	Z4.243.8453.0	100
	04.019.0289.0	10
	04.243.8550.0	10
	04.019.1189.0	10
WEF 1 BSS/35	69.920.1253.0	100

Configuration software for DIN rail terminal blocks, *wieplan*

wieplan was developed to provide you with a powerful software tool for the configuration of terminal block assemblies using Wieland DIN rail terminal blocks.

wieplan is available in 4 languages. It is user-friendly and its intuitive user interface guides you step by step through the entire configuration process. After completion you can optionally order your configured terminal block assembly from Wieland for complete pre-assembly.

Thus ***wieplan*** helps you to save time and money.

Managing projects

Benefits:

- To begin each configuration you automatically start from the basic project management menu.
- You create new projects and are reliably guided through the easy and practice-oriented program logics.
- You always have the choice of either opening an already existing project or of creating a new one.

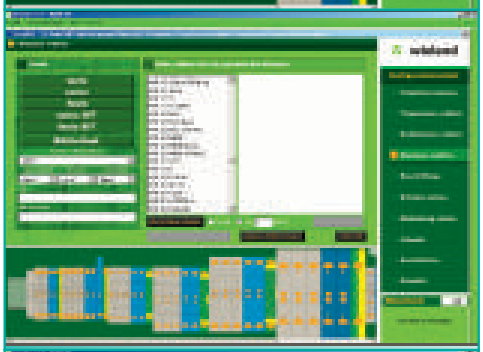

Configuring terminal block assemblies without errors

Benefits:

- You work with high-quality graphs viewing the terminal blocks from the top; the accessories added are visible at any time.
- You continually use the plausibility check that reminds you of the accessories required such as end plates.
- You are provided with a product catalog with search function; you can add your own order numbers, if required; and you can create libraries for self-defined products.

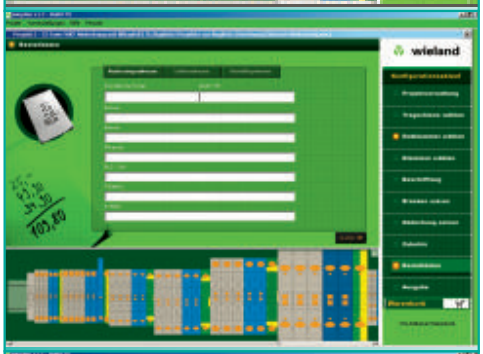

Entering order data

Benefits:

- You enter your data such as invoice and delivery address in the order data screen only once and can use them for any follow-up orders.
- You may order by e-mail; in this case the terminal block assembly data are zipped automatically.

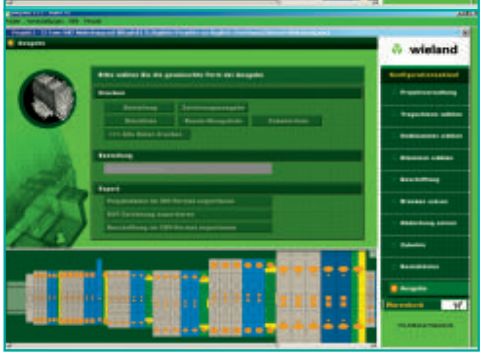

Terminal block assembly output

Benefits:

- You print out the order, the parts list and the drawing data, and, if required, your own order numbers.
- You create a DXF file and export the current terminal block assembly to a CAD program.
- You export the marking in CSV format including all marking data for further processing in ***wiemarc,*** for example.
- You can use a bidirectional interface available for your CAE system EPLAN.

Marking system for DIN rail terminal blocks, *wiemarc/wieplot*

Individual marking of DIN rail terminal blocks means ***wiemarc*** and ***wieplot.*** at Wieland Electric. The ***wieplot*** software was developed to provide you with maximum flexibility in marking your terminal block assemblies. Together with ***wieplot*** you have a powerful marking system that enables you to work professionally from the individual marking tag to series marking of your terminal block assemblies. You feel confident with the system due to its easy handling and visual representation of your marking, even when you use it for the first time.

But ***wieplot*** offers even more!

In addition to the marking tags for DIN rail terminal blocks you can also print self-adhesive tags and labels or cable markings. A slight modification can even make your plotter a powerful engraving system.

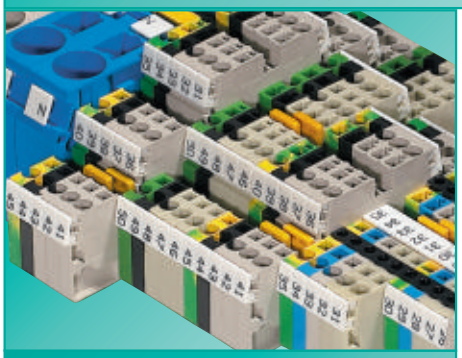

selos – fasis – taris

Marking with a system

- Individual marking of all terminal blocks for clear wire/ termination point assignment
- One single marking system for all designs
- Marking of individual tags; marking strips in the relevant terminal block spacing; or group markings
- Individual planning of terminal block assemblies and markings with ***wieplan***

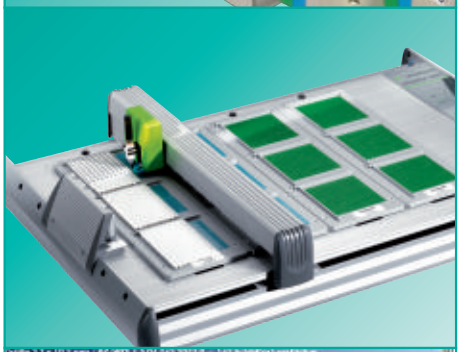

wieplot

Ready for universal use

- Marks all common marking systems available for DIN rail terminal blocks
- Different marking tags can be marked individually in one single work step
- Marking of labels, self-adhesive tags and cables is possible

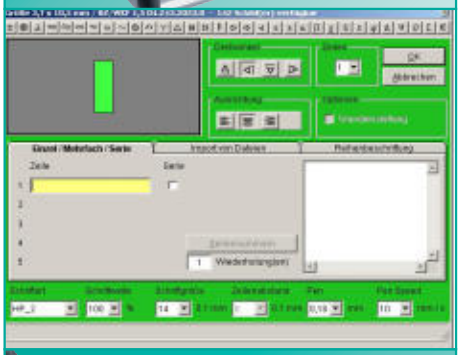

wiemarc

Easy and quick

- Simple and intuitive user interface
- Direct graphical display of the marking tags including plausibility check
- Customized layouts can be created individually
- Data import from CAD, Excel, text or ***wieplan*** files

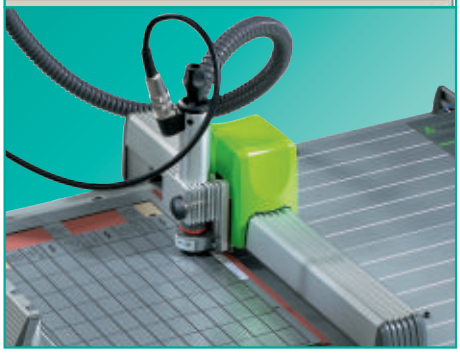

wieplot **engraving system**

Durable and safe – *wieplot* engraving system

- Easy modification to ***wieplot*** to make it an engraving system
- Engraving of multi-layer plastic boards
- Clean and dust-proof operation due to integrated vacuum device
- Create individual layouts using ***wiemarc***

Configuration and marking systems for DIN rail terminal blocks

Configuration software *wieplan*

Type	Part No.	Std. Pack
wieplan CD	95.502.1000.0	1

Scope of delivery:

CD with cover

Description:

wieplan is a software used to configure, document and order DIN rail terminal block assemblies. The intuitive user interface makes working with ***wieplan*** as easy as child's play.

wieplan enables data exchange through CAE systems:
– EPLAN 5
– EPLAN Electric P8

System requirements:

Pentium II PC or compatible, min. 200 MHz
64 Mbyte RAM
CD-ROM drive
VGA graphics adapter and monitor

wieplan supports: Windows 98®
Windows 2000®
Windows NT®
Windows ME®
Windows XP®

Marking computer *marcom 2*

Type	Part No.	Std. Pack
marcom 2	95.502.0000.0	1

Scope of delivery:

Marking computer in case
European power supply unit
Power Pack
Data cassette with job memory
Marking tag carrier
Plotter pen, 0.25 mm
Cleaning set

Description:

wieland marcom 2 is a freely programmable marking computer for DIN rail terminal blocks, pluggable connectors, switching devices and cables. The computer provides of a large number of fonts, with numerical and alphanumerical characters and symbols. ***marcom 2*** is portable and can be used at any location; it can be operated either using the mains or batteries.

Technical data:

Operator panel:	190 mm x 45 mm
Resolution:	0.01 mm
Power supply unit:	50/60 Hz, 100–230 V
Output voltage:	9,5 V (150 mV/1.4 VA)
	14 V (450 mA/6.3 VA)
Replaceable battery:	16.8 V (14 NiCd-Zellen)
Dimensions:	380 mm x 190 mm x 63 mm
Weight:	6.2 kg

Marking software *wiemarc*

Type	Part No.	Std. Pack
wiemarc CD	95.502.0501.0	1

Scope of delivery:

CD with cover

Description

wiemarc is a Windows® based plotter software for customized marking using the ***wieplot*** 500. plotter system.
Both the Wieland standard marking system and marking tags and labels of other suppliers can be marked easily. The ***wiemarc*** software version 4.0 provides the option of connecting to the ***wieplot*** 500 E-UNIT engraving system.

System requirements:

Pentium II PC or compatible, min. 200 MHz
64 Mbyte RAM
CD-ROM drive
VGA graphics adapter and monitor

wieplan supports: Windows 98®
Windows 2000®
Windows NT®
Windows ME®
Windows XP®

Marking system for DIN rail terminal blocks with spring clamp connection

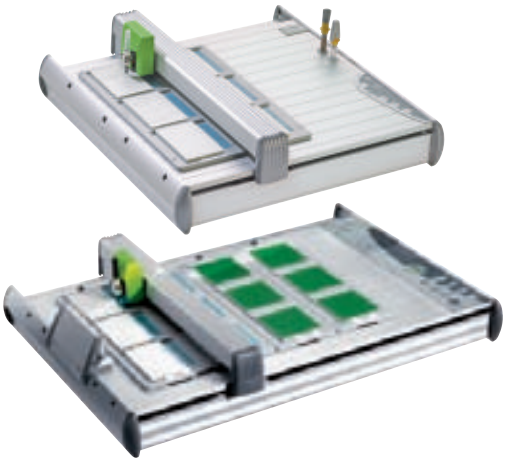

Plotter systems *wieplot*

Type	Part No.	Std. Pack
Compl. pack. wieplot basic	95.502.0607.0	1
Compl. pack. wieplot 500	95.502.0604.0	1
Scope of delivery *wieplot basic*:		
Data cable and manual, 4 Wieland tags for ***wieplot***		
system, dust protection cover, universal mounting		
plate, disposable plotter pen (0.25 mm), ***wiemarc***		
software		
Scope of delivery *wieplot* 500:		
Data cable and manual, 4 receptacles for WSB*,		
accessories kit, ***wiemarc*** software		
Description:		
With ***wiemarc*** you can create customized marking		
data on your PC. These can then be output on the		
wieplot 500 plotter system to various marking plates.		
* WSB (= Wieland standard marking system)		
Technical data:		
Resolution:	0.01 mm	
Accuracy:	+/- 0.05 mm	
Power supply unit:	50/60 Hz, 100–240 V,	
Output voltage:	24 V DC 1.4 A	
Current input:	ca. 0.3 A bei 220 V	
Approval:	UL-UL1950	
	CSA 950	
	VDE EN 60950	
Radio interf. suppr.:	FCC class B	
	FCC sect. 15 and VDE class B	
Interfaces:	USB Level 1.1, parallel	

Ink kit for *wieplot* 500

Type	Part No.	Std. Pack
Ink kit	95.502.0610.0	1
Scope of delivery:		
Plotter pen 0.25 mm with ink cartridge		
Permanent plotter pen 0.3 mm		
Cleaning set		
Plotter pens for *wieplot* 500 systems:		
Plotter pen 0.18 mm	95.502.0118.0	
Plotter pen 0.25 mm	95.502.0125.0	
Plotter pen 0.35 mm	95.502.0135.0	
Plotter pen 0.50 mm	95.502.0150.0	
Plotter pen 0.70 mm	95.502.0170.0	
Plotter pen 1.00 mm	95.502.0100.0	
Perm. plotter pen 0.30 mm	95.502.0230.0	
Perm. plotter pen 0.70 mm	95.502.0270.0	
Dispos. plotter pen 0.25 mm	95.502.0125.1	
Dispos. plotter pen 0.35 mm	95.502.0135.1	
Hand pens 0.25 mm	95.502.0425.0	
Hand pens 0.35 mm	95.502.0435.0	
Hand pens 0.50 mm	95.502.0450.0	
Hand pens 0.70 mm	95.502.0470.0	
Accessories:		
Ink cartridge P1.0, 5 x 1 ml	95.502.0199.0	
Cleaning set	95.502.0198.0	
Pen cleaner	95.502.0197.0	
Dust protection hood	95.502.0612.0	
Service kit for pen station	95.502.0613.0	
Seal inserts kit		
Receptacles for Wieland marking plates		
Receptacle for WSB	95.502.0620.0	
Receptacle for BZ/WKF 1,5	95.502.0627.0	
Receptacle for BZ/WKF 1,5/10	95.502.0628.0	
Available on request:		
Receptacles for marking systems from competition		
Use of ***wiemarc*** with non-Wieland plotter systems		

Engraving unit for *wieplot* 500

Type	Part No.	Std. Pack
wieplot 500 E-UNIT	95.502.0700.0	1
Scope of delivery:		
Engraving spindle		
Engraving head (with fuse and counter bearing)		
Control unit ***wieplot*** VEC 500		
Vacuum cleaner ***wieplot*** VC 500		
Connection cables		
Description:		
The ***wieplot*** 500 E-UNIT engraving unit has been		
designed for use with the ***wieplot*** 500 plotter. The		
system is set up for engraving multi-layer plastic tags.		
The Plotboard A4 in a 297 x 202 mm format is the		
receptacle for marking paper sheets and labels and		
also enables engraving of plastic boards.		
Accessories:		
Graving tool SET, complete	95.502.0710.0	
Graving tool 0.2 mm	95.502.0710.2	
Graving tool 0.3 mm	95.502.0710.3	
Graving tool 0.4 mm	95.502.0710.4	
Graving tool 0.5 mm	95.502.0710.5	
Graving tool 0.7 mm	95.502.0710.7	
Graving tool 1.0 mm	95.502.0711.0	
Receptacle:		
Plotboard A4	95.502.0625.0	

Marking accessories for DIN rail terminal blocks

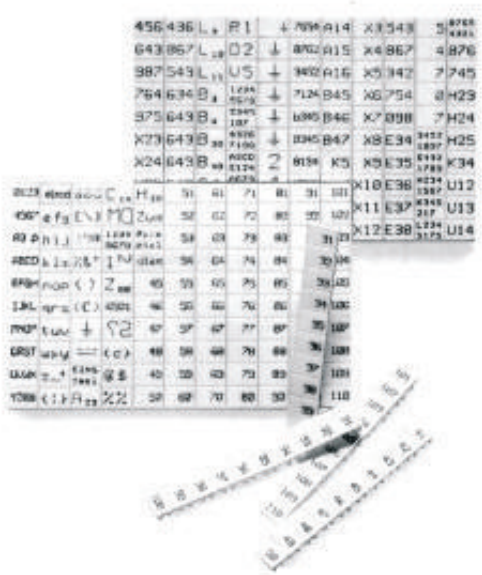

Marking plates

for ***marcom*** 2 marking computer
for ***wieplot*** 500 plotter system

Type	Part No.	Std. Pack
Marking plate, unmarked Width 4 x 5.0 mm		
100 tags per plate		
9605 A/4/10/10	Z4.243.2053.0	10
for outer block marking		
Marking plate, unmarked Width 5 x 8.3 mm		
110 tags per plate		
9075 A/5/10/11	Z4.242.5053.0	10
Width 5 x 14 mm		60 tags per plate
9705 AL/5/10/6	Z4.242.5153.0	10
Marking plate, unmarked Width 6 x 8.3 mm		
110 tags per plate		
9705 A/6/10/11	Z4.242.6053.0	10
Width 6 x 14 mm		60 tags per plate
9705 AL/6/10/6	Z4.242.6153.0	10
Marking plate, unmarked Width 8 x 8.3 mm		
70 tags per plate		
9705 A/8/10/7	Z4.242.8053.0	10

All blocks/5 mm wide and larger

Type	Part No.	Std. Pack
Single marking tag, unmarked		
Width 5 x **8.3** mm		
9705 A	04.242.0850.0	500
Width 5 x **14** mm		
9705 AL	04.242.1553.0	500
Single marking tag, marked		
Width 5 x **8.3** mm		
9705 AB*	04.842.0850.0	500
Width 5 x **14** mm		
9705 ALB	04.842.1553.0	500

2.5 mm²/5 mm wide

Type		Part No.	Std. Pack
Marking strips, unmarked			
9705 A/5/10		04.242.5053.0	25
Marking strips, marked			
9705 A/5/9 B	1 – 9	04.842.4953.0	25
9705 A/5/10 B*		04.842.5053.0	25
9705 A/5/10 B	1 – 10	04.845.0153.0	25
	11 – 20	04.845.0253.0	25
	21 – 30	04.845.0353.0	25
	31 – 40	04.845.0453.0	25
	41 – 50	04.845.0553.0	25
	51 – 60	04.845.0653.0	25
	61 – 70	04.845.0753.0	25
	71 – 80	04.845.0853.0	25
	81 – 90	04.845.0953.0	25
	91 – 100	04.845.1053.0	25
	⏚ (10 x)	04.855.0053.0	25
	⏚ (10 x)	04.855.0153.0	25
	+ (10 x)	04.855.0253.0	25
	– (10 x)	04.855.0353.0	25
	L1 (10 x)	04.855.0453.0	25
	L2 (10 x)	04.855.0553.0	25
	L3 (10 x)	04.855.0653.0	25
	PE (10 x)	04.855.0753.0	25
	SL (10 x)	04.855.3153.0	25
	N (10 x)	04.855.3253.0	25
	F1 (10 x)	04.855.0953.0	25
	F2 (10 x)	04.855.1053.0	25
L1, L2, L3, N, PE	(2 x)	04.855.0853.0	25
with enlarged marking area			
9705 AL/5/10		04.242.5153.0	25
* Custom marking upon request			

4 mm²/6 mm wide

Type		Part No.	Std. Pack
Marking strips, unmarked			
9705 A/6/10		04.242.6053.0	25
Marking strips, marked			
9705 A/6/9 B	1 – 9	04.842.5953.0	25
9705 A/6/10 B*		04.842.6053.0	25
9705 A/6/10 B	1 – 10	04.846.0153.0	25
	11 – 20	04.846.0253.0	25
	21 – 30	04.846.0353.0	25
	31 – 40	04.846.0453.0	25
	41 – 50	04.846.0553.0	25
	51 – 60	04.846.0653.0	25
	61 – 70	04.846.0753.0	25
	71 – 80	04.846.0853.0	25
	81 – 90	04.846.0953.0	25
	91 – 100	04.846.1053.0	25
	⏚ (10 x)	04.856.0053.0	25
	⏚ (10 x)	04.856.0153.0	25
	+ (10 x)	04.856.0253.0	25
	– (10 x)	04.856.0353.0	25
	L1 (10 x)	04.856.0453.0	25
	L2 (10 x)	04.856.0553.0	25
	L3 (10 x)	04.856.0653.0	25
	PE (10 x)	04.856.0753.0	25
	SL (10 x)	04.856.3153.0	25
	N (10 x)	04.856.3253.0	25
	F1 (10 x)	04.856.0953.0	25
	F2 (10 x)	04.856.1053.0	25
L1, L2, L3, N, PE	(2 x)	04.856.0853.0	25
with enlarged marking area			
9705 AL/6/10		04.242.6353.0	25
* Custom marking upon request			

10 mm²/16 mm wide

Type	Part No.	Std. Pack
10 mm²/10 mm wide		
marked for 5 blocks (every 2nd tag) *		
9705 A/5/10/5 B	04.842.5553.0	25
16 mm²/12 mm wide		
marked for 5 blocks (every 2nd tag) *		
9705 A/6/10/5 B	04.842.6553.0	25
35 mm²/16 mm wide		
marked for 5 blocks (every 2nd tag) *		
9705 A/8/10/5 B	04.842.8553.0	25
* Specifiy required marking with part no.		

Ferrules for DIN rail terminal blocks

Ferrules with insulating material sleeve

Materials:
Sleeve: Polypropylene, temperature resistance 105 °C, creepage resistant

Tube: E-Cu, galvanically tin-plated

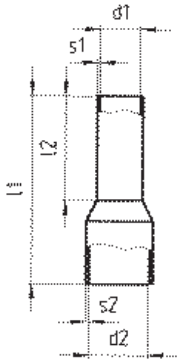

Ferrules without insulating material sleeve

Material:
Tube: E-Cu, galvanically tin-plated

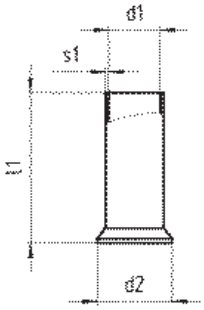

	Cross section mm²		Color	Part No.	Std. Pack
Ferrules with insulating material sleeve	0.50	norm.	white	06.600.2027.0	100
according to DIN 46 228 T4	0.75	norm.	gray	06.600.2127.0	100
	1.00	norm.	red	06.600.2227.0	100
	1.50	norm.	black	06.600.2327.0	100
	1.50	long	black	06.600.2427.0	100
	2.50	norm.	blue	06.600.2527.0	100
	2.50	long	blue	06.600.2627.0	100
	4.00	norm.	gray	06.600.2727.0	100
	4.00	long	gray	06.600.2827.0	100
	6.00	norm.	yellow	06.600.2927.0	100
	6.00	long	yellow	06.600.3027.0	100
	10.00	norm.	red	06.600.3127.0	100
	10.00	long	red	06.600.3227.0	100
	16.00	norm.	blue	06.600.3327.0	100
	16.00	long	blue	06.600.3427.0	100
	25.00	halblong	yellow	06.600.3527.0	50
Ferrules without insulating material sleeve	0.50	norm.		06.600.4027.0	1000
according to DIN 46 228 T1	0.75	norm.		06.600.4127.0	1000
	1.00	norm.		06.600.4227.0	1000
	1.50	norm.		06.600.4327.0	1000
	2.50	norm.		06.600.4427.0	1000
	4.00	norm.		06.600.4527.0	1000
	6.00	norm.		06.600.4627.0	500
	10.00	norm.		06.600.4727.0	500
	16.00	norm.		06.600.4827.0	100
	25.00	norm.		06.600.4927.0	100
	35.00	norm.		06.600.5027.0	100

Tools for DIN rail terminal blocks

Wire strippers

0.08 – 10 mm² AWG 28 – 7

Pressing tools

A: 0.08 – 10 mm² AWG 28 – 7
B: 10 – 25 mm² AWG 7 – 4
C: 35 – 50 mm² AWG 2 – 1/0

		Type	Part No.	Std. Pack	Type	Part No.	Std. Pack
Wire strippers		AIW/A	95.350.0100.0	1			
Pressing tool for ferrules							
Pressing tool A	Length: 180 mm				PW/A	95.101.1300.0	1
Pressing tool B	Length: 203 mm				PW/B	95.101.1100.0	1
Pressing tool C	Length: 203 mm				PW/C	95.101.1200.0	1

DIN rail terminal blocks for junction boxes with spring clamp connection, type *WKF/WKIF/WKIS*

„We at Wieland" know what you need!

For more than 90 years we have been your competent partner in the field of connection technology for your products. Close cooperation with our customers helps to create innovative products manufactured according to the highest quality standards.

Increasing automation as well as the safety functions to be implemented inside buildings increase the requirements for power and signal management in electrical distribution systems. The growing number of circuits and the increasingly confined space available requires a DIN rail terminal block system that reduces the amount and costs of cabling but still enables clear and convenient wiring.

Wieland's DIN rail terminal blocks provide you with the right solution.

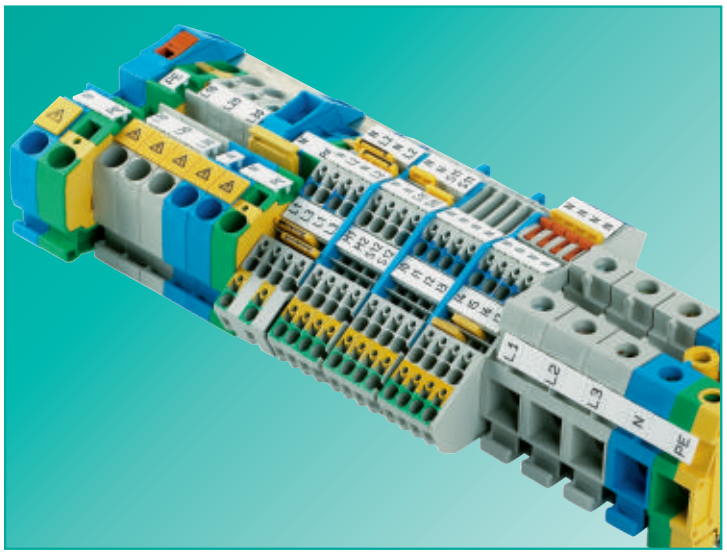

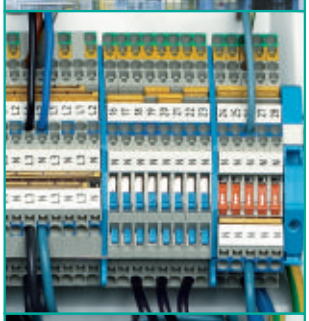

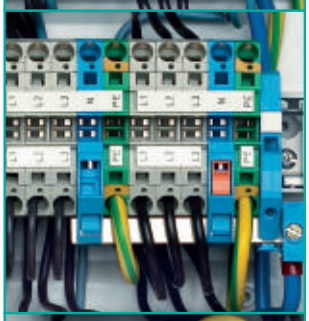

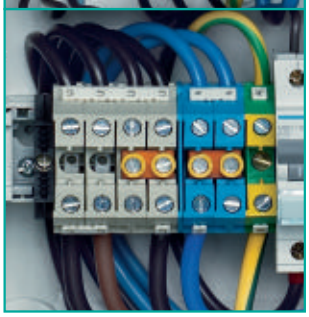

selos/fasis BIT

The right solution for your application

All DIN rail terminal blocks of the BIT series comply with the directives for the setup of high-voltage and supply systems for safety services according to VDE 0108 and have been designed for use in public buildings. Isolation measurement, for example, can be carried out with the wires connected.

You have the choice. The connection technology can be implemented either in purely spring clamp or screw technology or they can be mixed together.

fasis BIT-S
Type WKIS...

DIN rail terminal blocks with push-in spring

The new installation blocks of series ***fasis*** BIT-S with push-in are an outstanding extension to the existing product range.

fasis BIT-S helps to increase efficiency in electrical installations even more, since rigid as well as flexible wires with ferrules can be directly connected without opening the termination point thus achieving considerable time savings.

fasis BIT
Type WKF/WKIF...

DIN rail terminal blocks with tension spring

The tension spring technology of series ***fasis*** BIT stands out due to its maintenance-free and vibration-proof connection technology. The TOP connection is especially suitable for confined spaces.

Due to its great product variety and a wire range between 0.5 mm^2 and 16 mm^2 the ***fasis*** BIT series enables many innovative solutions for various requirements.

selos BIT
Type WK/WKI...

DIN rail terminal blocks with screw connection

The screw connection technology of series ***selos*** BIT is the best known and most widely used connection technology worldwide. The lateral connection option makes wiring more convenient in installations, especially on the supply side and in the case of larger cross sections.

The user-friendly ***selos*** BIT series can be used universally in the wire range between 0.5 mm^2 and 50 mm^2.

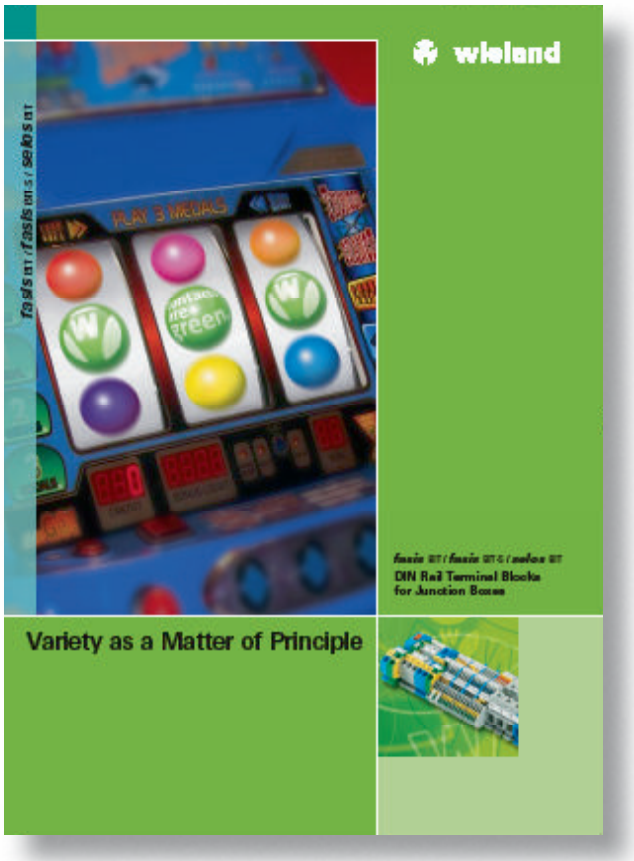

Please ask for our catalog

DIN Rail Terminal Blocks for Junction Boxes

Part no. 0117.0

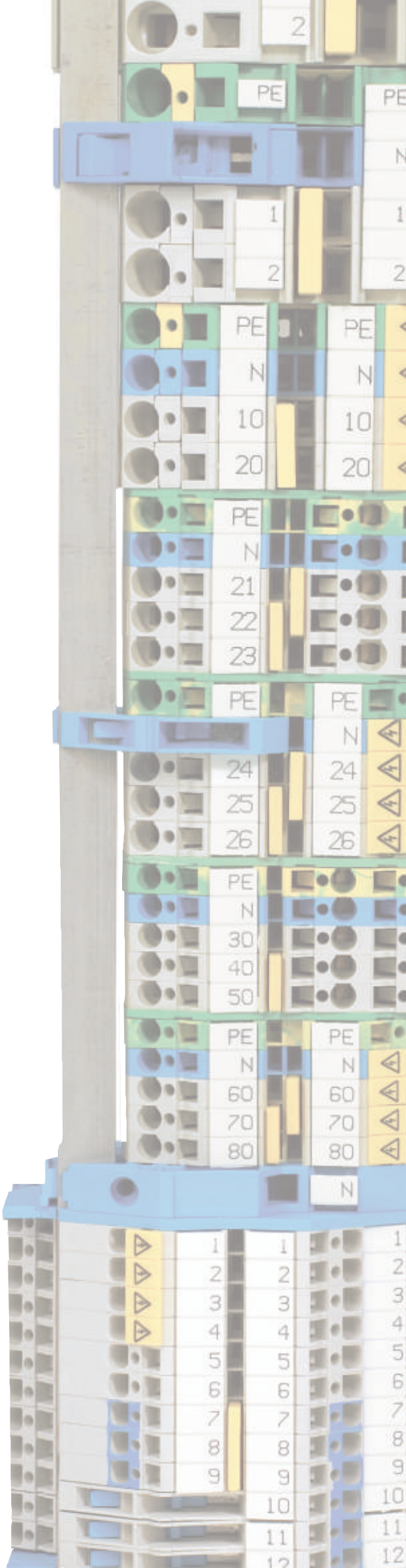

Support ⓘ Service

Hotline numbers

Sales Department:	**Phone**
Questions for the sales department: availability, delivery time and prices	+49 951 9324-990

Technical Support:

Technical questions regarding product features and application options of our products as well as functionality and equipment:

Area of Automation technology:

• Terminal blocks ***fasis, selos, taris®***	+49 951 9324-991
• Safety engineering ***safety***	+49 951 9324-999
• Decentralized I/O, current supply, overvoltage protection, measuring and monitoring relays, time lag relays, belt relays, analog modules, passive interfaces ***interface***	+49 951 9324-995
• Decentralized power distribution ***podis®***	+49 951 9324-998
• Industrial plug connector ***revos***	+49 951 9324-997
• Device terminals, European terminal strips, empty housings	+49 951 9324-993
• PCB terminals ***wiecon***	+49 951 9324-994

Fax: +49 951 9326-991
e-mail: AT.TS@wieland-electric.com

Area of facility installation technology:

• System plug connectors for building installation ***gesis®, gesis®*** ELECTRONIC	+49 951 9324-996
• Terminal blocks ***fasis***BIT, ***selos***BIT	+49 951 9324-992

Fax: +49 951 9326-996
e-mail: BIT.TS@wieland-electric.com

General information, news and our e-catalog at:

www.wieland-electric.com

Our subsidiaries

... and the addresses of our sales representatives, located worldwide, are available at:
www.wieland-electric.com

USA
Wieland Electric Inc.
49 International Road
Burgaw, N.C. 28425
Phone +1-910-259 5050
Fax +1-910-259 3691
sales@wielandinc.com
www.wielandinc.com

CANADA
Wieland Electric Inc.
2889 Brighton Road
Oakville, Ontario L6H 6C9
Phone +1-905-829 8414
Fax +1-905-829 8413
info@wieland-electric.ca

GREAT BRITAIN
Wieland Electric Ltd.
Riverside Business Centre,
Walnut Tree Close
GB-Guildford /Surrey GU1 4UG
Phone +44-1483-531 213
Fax +44-1483-505 029
sales@wieland.co.uk

FRANCE
Wieland Electric SARL.
103, Chemin de Ronde
F-78290 Croissy-sur-Seine
Phone +33-1-30 15 07 07
Fax +33-1-30 15 07 14
infos@wieland-electric.fr

SPAIN
Wieland Electric S.L.
C/ Maria Auxiliadora 2 bajos
E-08017 Barcelona
Phone +34-93-252 3820
Fax +34-93-252 3825
ventas@wieland.es

ITALY
Wieland Electric S.r.l.
Via Edison, 209
I-20019 Settimo Milanese
Phone +39-02-48 91 63 57
Fax +39-02-48 92 06 85
info@wieland-electric.it

POLAND
Wieland Electric Sp. Zo.o.
Poznań Swadzim
ul. Św. Antoniego 8
62-080 Tarnowo Podgórne
Phone +48-61 84 09-101
Fax +48-61 84 07-166
office@wieland-electric.pl

CHINA
Wieland Electric Trading
Unit 2703
International Soho City
889 Renmin Rd., Huang Pu District
PRC- Shanghai 200010
Phone +86-21 63 555 833
Fax +86-21 63 550 090
info-shanghai@wieland-electric.cn

CZECH REPUBLIC
(Production)
Wieland Electric s.r.o.
Nadražni 1557
356 01 Sokolov
Phone +420-352 302 011
Fax +420-352 302 027

DENMARK
Wieland Electric GmbH-
Brennerstraße 10–14
D-96052 Bamberg
Phone +45-70-26 66 35
Fax +45-70-26 66 37
sales@wieland-electric.dk

Informational material for ordering and for downloading from our websites

Subject to technical modifications!
gesis®, podis®, samos®, taris® are registered trademarks of Wieland Electric GmbH